HARDI	**Agroparts: www.HARDI-INTERNATIONAL.com**	
	Nav/Nav M 800/1000 Gallon Eagle 45', 50', 60', 66', 80', 88'	Country-Code 11
		Date 16.03.2016 13:34

WWW.AGROSERWIS.PL

main group	page-n°	date	description
Pumps			
	A0220-HIN	01:01:16	PUMP - 1302 W/ MOUNTING BASE
	A0230-HIN	01:01:16	PUMP - 1303 W/ MOUNTING BASE
	A0240-HIN	01:01:16	PUMP - 1301/1302 FITTINGS
	A0250-HIN	01:01:16	PUMP - 361 W/MOUNTING BASE
	A0260-HIN	01:01:16	PUMP - 363 W/MOUNTING BASE
	A0270-HIN	01:01:16	PUMP - 363/1000 RPM W/MOUNTING
	A0280-HIN	16:02:16	PUMP - 364 540/1000 RPM
	A0300-HIN	01:01:16	PUMP - 361/363FITTINGS
	A0320-HIN	01:01:16	PUMP - 462 W/MOUNTING BASE
	A0330-HIN	01:01:16	PUMP - 463 W/ MOUNTING BASE
	A0340-HIN	01:01:16	PUMP - 463/1000 RPM W/MOUNTING
	A0350-HIN	01:01:16	PUMP - 464 540/1000 RPM
	A0390-HIN	01:01:16	PUMP - 460/462/463 FITTINGS
	A0420-HIN	01:01:16	PUMP-204,206-150,210,310 ACE
	A0470-HIN	01:01:16	PUMP 9016/9018 HYPRO CENT.
	A0510-HIN	01:01:16	PTO SHAFTS - BONDIOLI DIAPH.
	A0520-HIN	01:01:16	PTO SHAFTS - BONDIOLI CENT.
	A0580-HIN	01:01:16	PTO SHAFTS - AMA DIAPHRAGM
Controls, Filters, Valves			
	B0250-HIN	01:01:16	EC-SC F.ESC+TMS-ELEC.GRN GRIPS
	B0260-HIN	01:01:16	EC MASTER VALVE-ELEC.(RED GRP)
	B0270-HIN	01:01:16	EC MASTER VALVE-ELEC.(GRN GRP)
	B0290-HIN	01:01:16	EC BOOM VALVE - ELEC.(RED GRP)
	B0300-HIN	01:01:16	EC BOOM VALVE-ELEC.(GRN GRIP)
	B0370-HIN	01:01:16	PRESSURE REGULATOR - S93 06
	B0390-HIN	01:01:16	CONTROL BOX F/EC+EC-SC
	B0400-HIN	01:01:16	CONTROL BOX F/EC + ECSC POST96
	B0410-HIN	01:01:16	12 VOLT OUTLET BOX
	B0420-HIN	01:01:16	MANIFOLD SYSTEM - PRESSURE
	B0430-HIN	01:01:16	MANIFOLD - S67 VALVE
	B0520-HIN	01:01:16	MANIFOLD SYSTEM - SUCTION
	B0530-HIN	01:01:16	MANIFOLD - S93 VALVE
	B0540-HIN	01:01:16	SMART VALVE-S93 MANIFOLD VALVE
	B0580-HIN	01:01:16	PRESSURE RELIEF VALVE
	B0650-HIN	01:01:16	SELF CLEANING FILTER-SCREW TOP
	B0660-HIN	01:01:16	TOP SUCTION ASSEMBLY-SCREW CAP
	B0670-HIN	01:01:16	TOP SUCTION ASSEMBLY-S93 2"
Hydraulics			
	C0010-HIN	01:01:16	HYDRAULICS - CYLINDERS
	C0030-HIN	01:01:16	HYDRAULICS - FAROIL CYLINDERS
	C0170-HIN	01:01:16	HYDRAULICS - EAGLE HY 45'-66'
	C0240-HIN	01:01:16	HYDRAULICS-EAG HZ 45-66'PRE 95
	C0250-HIN	01:01:16	HYDRAULCS EAG HZ 45-66'POST 95
	C0260-HIN	01:01:16	HYD EAG HZ 45-66' W/DH CONTROL
	C0280-HIN	01:01:16	HYDRAULCS EAGLE HZ 80-90'PRE95
	C0290-HIN	01:01:16	HYD EAGLE HZ 80-90' W/JOYSTICK
	C0300-HIN	01:01:16	HYD EAGLE HZ 80-90' W/ DH
	C0310-HIN	01:01:16	HYDRAULICS EAGLE/FORCE DH
	C0320-HIN	01:01:16	HYD EAGLE HZ JOYSTICK CONTROL
	C0340-HIN	01:01:16	HYD EAGLE HZ JOYSTICK 2005
	C0580-HIN	01:01:16	CETOP VALVES
Booms, Nozzle Bodies & Tubes			
	D0260-HIN	01:01:16	BOOM EAGLE WINGS 45' 50'
	D0270-HIN	01:01:16	BOOM EAGLE WINGS 60' 66'
	D0280-HIN	01:01:16	BOOM EAG H-FRAME/CENTER 45-66'
	D0290-HIN	01:01:16	BOOM EAG H-FRAME/CENTER 45-66'
	D0370-HIN	01:01:16	BOOM EAGLE WINGS 80',88',90'

WWW.RAT-ROM.PL

main group	page-n°	date	description
	D0380-HIN	01:01:16	BOOM EAG H-FRAME/CENTER 80-90'
	D0510-HIN	01:01:16	TRANSPORT BRACKETS-EAGLE BOOM
	D1000-HIN	01:01:16	BOOM-NOZZLES 110° FLAT FAN ISO
	D1010-HIN	01:01:16	BOOM-NOZZLES 110° LOWDRIFT ISO
	D1020-HIN	01:01:16	BOOM-NOZZLES 80° FLAT FAN ISO
	D1030-HIN	01:01:16	BOOM-NOZZLE CAPS AND FILTERS
	D1040-HIN	01:01:16	BOOM-NOZZLES INJET
	D1050-HIN	01:01:16	BOOM-NOZZLES MINIDRIFT
	D1060-HIN	01:01:16	BOOM-NOZZLES QUINTASTREAM
	D1090-HIN	01:01:16	NOZZLE BODIES-SNAP FIT
	D1100-HIN	01:01:16	DOUBLE NOZZLE HOLDER-SNAP FIT
	D1110-HIN	01:01:16	NOZZLE TUBES & HOLDER-PLASTIC
Tank and Frame: Field Sprayers			
	E0460-HIN	01:01:16	TANK-800/1000 NAV&NAV M-CENT.
	E0470-HIN	01:01:16	TANK-800/1000 NAV&NAV M-DIAPH.
	E0490-HIN	01:01:16	FRAME HC 800/1000 SA
	E0500-HIN	01:01:16	FRAME - NAVIGATOR HC 800/1000
	E0510-HIN	01:01:16	FRAME-NAV.M HC800/1000 PRE'05
	E0520-HIN	01:01:16	FRAME-NAV.M HC800/1000 POST'05
	E0530-HIN	01:01:16	FRAME - NAVIGATOR TA 800/1000
	E0540-HIN	01:01:16	FRAME-NAV.M TA800/1000 PRE'05
	E0550-HIN	01:01:16	FRAME-NAV.M TA800/1000 POST'05
	E0730-HIN	01:01:16	HUB ASSEMBLY F.2 1/8" SPINDLE
	E0750-HIN	01:01:16	HUB ASSY F. 3" SPINDLE CM750
Special equipment, Extras			
	K0050-HIN	01:01:16	CHEM.FILLER-MOUNTING BRACKETS
	K0060-HIN	01:01:16	CHEM.FILLER-PLUMBING-MANIFOLD
	K0070-HIN	01:01:16	CHEM.FILLER-PLUMBING-STANDARD
	K0080-HIN	01:01:16	CHEM.FILLER-STANDARD-PLUMBING
	K0090-HIN	01:01:16	CHEMICAL FILLER-HOPPER(PRE95)
	K0100-HIN	01:01:16	CHEMICAL FILLER-HOPPER(POST95)
	K0130-HIN	01:01:16	CLEAN WATER TANK
	K0180-HIN	01:01:16	DRAIN ASSEMBLY-PULL CORD TYPE
	K0230-HIN	01:01:16	END NOZZLE KIT
	K0250-HIN	01:01:16	ELECTRIC END NOZZLE KIT '09
	K0260-HIN	01:01:16	ELECTRIC END NOZZLE KIT '12
	K0270-HIN	01:01:16	FILTER ASSEMBLIES-IN LINE
	K0320-HIN	01:01:16	FLUSH SYSTEM TANK MOUNT NAV-M
	K0380-HIN	01:01:16	FOAM MARKER COMPRESSOR POST 94
	K0390-HIN	01:01:16	FOAM MARKER COMPRESSOR 2002
	K0400-HIN	01:01:16	FOAM MARKER COMPRESSOR 2007
	K0420-HIN	01:01:16	FOAM MARKER MOUNT BRACKETS
	K0430-HIN	01:01:16	FOAMMARKER DROPPER UPDATE 2000
	K0480-HIN	01:01:16	HANDGUN TYPE 60S/60L POST 95
	K0520-HIN	01:01:16	HOSE WRAPS
	K0560-HIN	01:01:16	PRESSURE GAUGES
	K0580-HIN	01:01:16	QUICKFILL-PLMBNG SYS-TRLR SPYR
	K0590-HIN	01:01:16	QUICKFILL-UPDATE 97-TRAILER
	K0670-HIN	01:01:16	REMOTE GAUGE-BK 180 & EC
	K0680-HIN	01:01:16	REMOTE GAUGE-ESC SPRAYERS-4"
	K0690-HIN	01:01:16	REMOTE GAUGE-MAGNETIC BASE KIT
	K0700-HIN	01:01:16	REMOTE GAUGE - NAVIGATOR M
	K0730-HIN	01:01:16	RINSE SYSTEM NOZZLES
	K0750-HIN	01:01:16	RINSE SYSTEM PLUMBING
	K0770-HIN	01:01:16	SAFETY CHAINS
	K0780-HIN	01:01:16	SIGHT GAUGE - REMOTE
Fittings			
	L0010-HIN	01:01:16	FITTINGS-CAP NUTS & HOSE BARBS

WWW.RU-TRONIK.PL

main group	page-n°	date	description
	L0020-HIN	01:01:16	FITTNGS-T-PIECES,CAPS & ELBOWS
	L0030-HIN	01:01:16	FITTINGS - HEXAGON NIPPLES
	L0040-HIN	01:01:16	FITTINGS - NIPPLES & ELBOWS
	L0050-HIN	01:01:16	FITTINGS - HOSE CONNECTORS
	L0060-HIN	01:01:16	FITTINGS - BULKHEAD
	L0070-HIN	01:01:16	FITTINGS - S-40
	L0080-HIN	01:01:16	FITTINGS - S-53
	L0090-HIN	01:01:16	FITTINGS - S-56 & S-61
	L0100-HIN	01:01:16	FITTINGS - S-67
	L0110-HIN	01:01:16	FITTINGS - S-93
	L0120-HIN	01:01:16	BULK HOSE
	L0130-HIN	01:01:16	HOSE CLAMPS
Electrical Equipment			
	M0030-HIN	01:01:16	CFX-750 DISPLAY, DGPS
	M0040-HIN	01:01:16	EZ-GUIDE PLUS LIGHT BAR
	M0050-HIN	01:01:16	EZ-STEER STEERING SYSTEM
	M0060-HIN	01:01:16	EZ-GUIDE 500 LIGHTBAR
	M0070-HIN	01:01:16	EZ-STEER 500 STEERING SYSTEM
	M0080-HIN	01:01:16	EZ-GUIDE 250 LIGHTBAR
	M0090-HIN	01:01:16	HC 2500/HM1500 DISPLAY/SCANBOX
	M0100-HIN	01:01:16	MUSTANG 3500 CONTROLLER
	M0120-HIN	01:01:16	TRANSDUCERS AND ACCESSORIES
	M0160-HIN	01:01:16	TRAFFIC LIGHT KIT
	M0200-HIN	01:01:16	SPRAYBOX II
	M0230-HIN	01:01:16	JUNCTION BOX - LIQUID
	M0280-HIN	01:01:16	39 PIN CABLES
	M0290-HIN	01:01:16	NORAC UC4 BOOM HEIGHT CONTROL
	M0300-HIN	01:01:16	NORAC VARIABLE RATE VALVE UC4
	M0360-HIN	01:01:16	NORAC SEVERE TERRAIN KIT
	M0370-HIN	01:01:16	NORAC UC5 BOOM HEIGHT CONTROL
	M0380-HIN	01:01:16	NORAC VAR. RATE VALVE UC4/UC5

WWW.RYSTROM.PL

	Agroparts: www.HARDI-INTERNATIONAL.com	
HARDI	PUMP - 1302 W/ MOUNTING BASE A0220-HIN, 01:01:16	Page 0 Date 16.03.2016 13:34

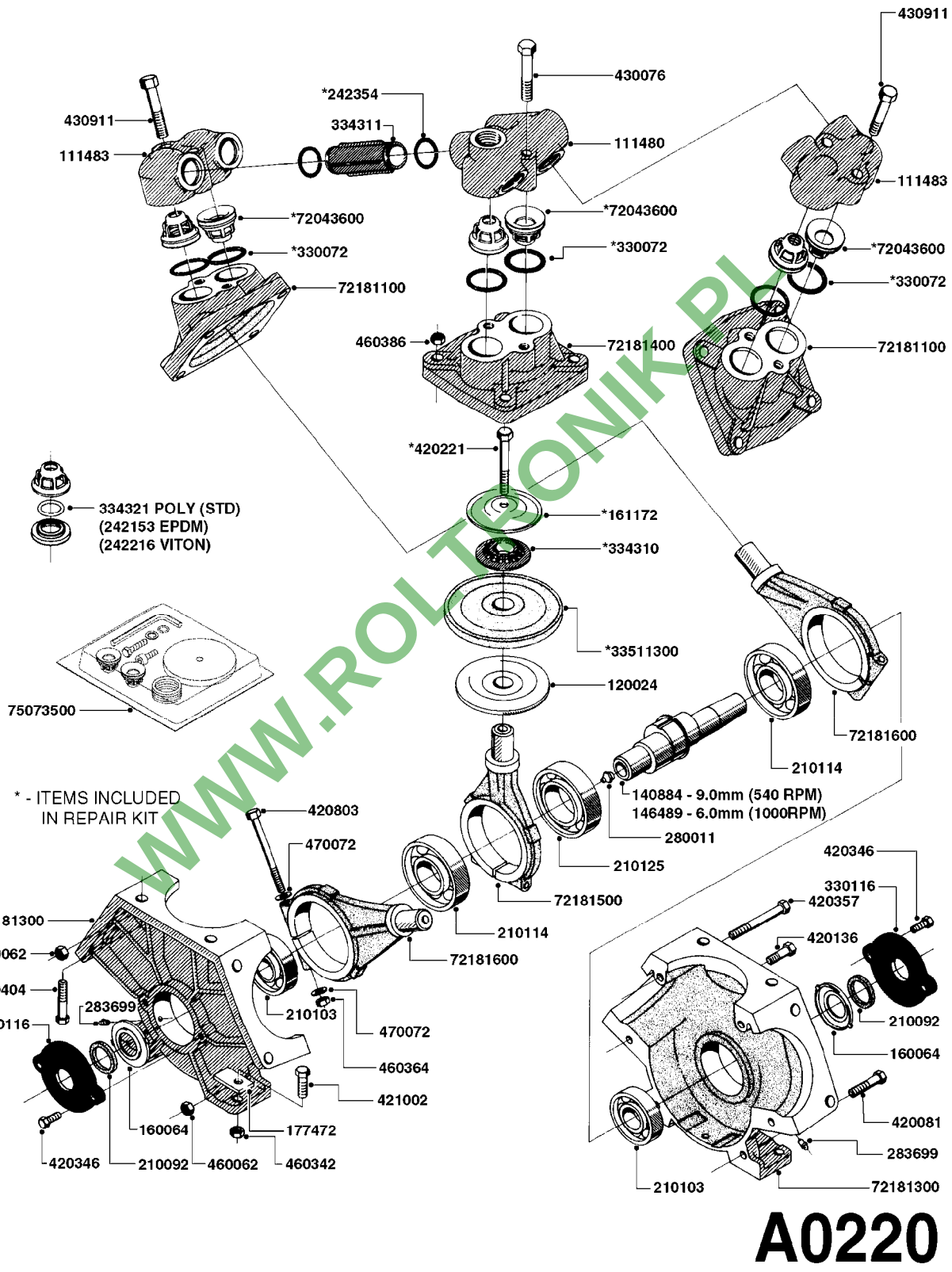

WWW.ROLTRONIK.PL

A0220

parts-nº	order qty	description
111480	1	VALVE HEAD 1302 CENTER
111483	1	VALVE HEAD SIDE 1302
120024	1	DIAPHRAGM BACK DISC 1200-1300
140884	1	CRANK SHAFT MODEL 1300-9
146489	1	CRANK SHAFT MODEL 1302-6MM
160064	1	DUST PLATE
161172	1	DIAPHRAGM DISC F. 1203/1303
177472	1	BRACKET 25 X 5
210092	1	SEAL FELT D43/30X5
210103	1	BEARING BALL 6306
210114	1	BEARING BALL 6308
210125	1	BEARING BALL 6210
242153	1	O-RING D26X4 EPDM
242216	1	O-RING VITON F/1202/1302/462
242354	1	O-RING D32.2X3.0 VITON F.S-53
280011	1	GREASE NIPPLE 3/8' SAE H TR
283699	1	GREASE NIPPLE M6X1
330072	1	O-RING D53.5/D45.5X4
330116	1	SEAL RETAINER, MODEL 1300
334310	1	NYLON WASHER 1202/1302/462
334311	1	CONNECTION PIPE INLET MOD.1302
334321	1	O-RING POLY. 34.0x26.0x4.0
420081	1	BOLT HEX 8.8 DEL 3/8'X40MM
420136	1	BOLT HEX 8.8 RAW 3/8'X30MM
420221	1	BOLT HEX 7/16'X2-1/4'
420346	1	BOLT HEX 8.8 DEL 3/8'X 25MM
420357	1	BOLT HEX 8.8 RAW 3/8'X85MM
420803	1	BOLT HEX 8.8 DEL M8X90
421002	1	BOLT HEX 8.8 DEL M10X30 FT DIN933
430076	1	BOLT HEX 8.8 RAW 1/2'X60MM
430404	1	BOLT HEX 8.8 DEL M12X50
430911	1	BOLT HEX 8.8 WG 1/2" x 70MM
460062	1	NUT HEX 3/8' GALV.
460342	1	NUT HEX M10 DEL DIN934
460364	1	NUT HEX M8 GALV.
460386	1	NUT HEX M12X1.75
470072	1	WASHER D15/D8X.5 LOCK
33511300	1	DIAPHRAGM 1202-1303 POLY 2006
72043600	1	VALVE FOR 462/463
72181100	1	DIAPHRAGM COVER 1203/1303+BLTS
72181300	1	PUMP CASTING 1300 RED W/BOLTS
72181400	1	DIAPHRAGM COVER 1303 W/BOLTS
72181500	1	CONNECTING ROD, CENTER 1303
72181600	1	CONNECTING ROD, SIDE MOD.1300
75073500	1	PUMP KIT 1300/1302 "06"

WWW.RCL-TRONIK.PL

HARDI	**Agroparts: www.HARDI-INTERNATIONAL.com**	
	PUMP - 1303 W/ MOUNTING BASE A0230-HIN, 01:01:16	Page 0 Date 16.03.2016 13:34

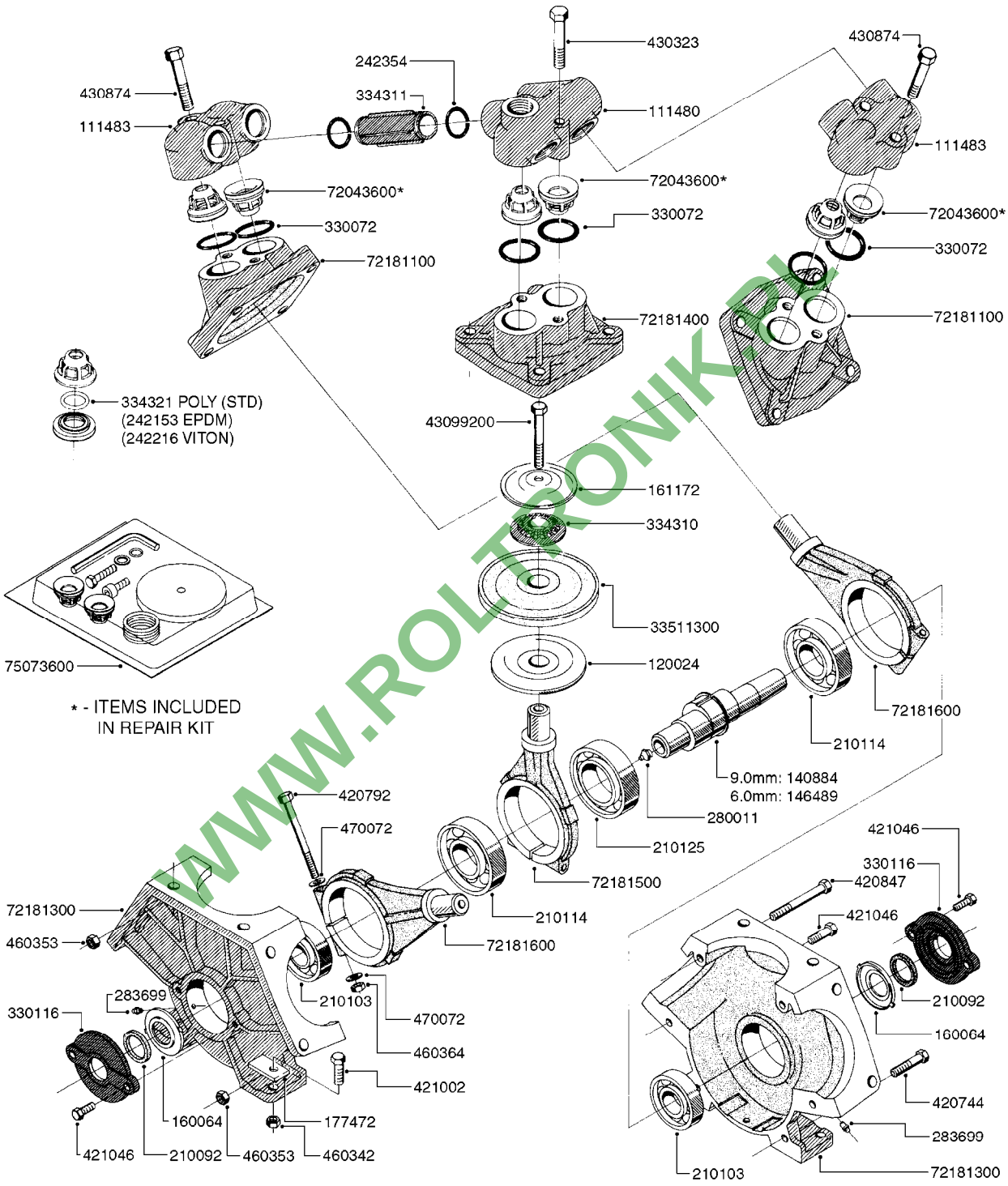

WWW.ROLTRONIK.PL

COMPLETE PUMPS
821635 - PUMP ONLY
10396203 - WITH PTO & DAMPER

COMPLETE ASSEMBLIES
WHOLEGOODS ITEMS

A0230

parts-nº	order qty	description
111480	1	VALVE HEAD 1302 CENTER
111483	1	VALVE HEAD SIDE 1302
120024	1	DIAPHRAGM BACK DISC 1200-1300
140884	1	CRANK SHAFT MODEL 1300-9
146489	1	CRANK SHAFT MODEL 1302-6MM
160064	1	DUST PLATE
161172	1	DIAPHRAGM DISC F. 1203/1303
177472	1	BRACKET 25 X 5
210092	1	SEAL FELT D43/30X5
210103	1	BEARING BALL 6306
210114	1	BEARING BALL 6308
210125	1	BEARING BALL 6210
242153	1	O-RING D26X4 EPDM
242216	1	O-RING VITON F/1202/1302/462
242354	1	O-RING D32.2X3.0 VITON F.S-53
280011	1	GREASE NIPPLE 3/8' SAE H TR
283699	1	GREASE NIPPLE M6X1
330072	1	O-RING D53.5/D45.5X4
330116	1	SEAL RETAINER, MODEL 1300
334310	1	NYLON WASHER 1202/1302/462
334311	1	CONNECTION PIPE INLET MOD.1302
334321	1	O-RING POLY. 34.0x26.0x4.0
420744	1	BOLT HEX 8.8 DEL M8X40
420792	1	BOLT HEX 8.8 RAW M8X95
420847	1	BOLT HEX 8.8 DEL M8X85
421002	1	BOLT HEX 8.8 DEL M10X30 FT DIN933
421046	1	BOLT HEX 8.8 DEL M8X25 FT A2 DIN933
430323	1	BOLT HEX 8.8 DEL M12X60
430874	1	SCREW SET 8.8 DEL M12X70 FT
460342	1	NUT HEX M10 DEL DIN934
460353	1	NUT HEX M8 BLACK
460364	1	NUT HEX M8 GALV.
470072	1	WASHER D15/D8X.5 LOCK
821635	1	PUMP 1303/9 540RPM
10396203	1	PUMP 1303 C/W PTO 540 RPM
33511300	1	DIAPHRAGM 1202-1303 POLY 2006
43099200	1	BOLT HEX SS M12 X 30 DIN933 A4
72043600	1	VALVE FOR 462/463
72181100	1	DIAPHRAGM COVER 1203/1303+BLTS
72181300	1	PUMP CASTING 1300 RED W/BOLTS
72181400	1	DIAPHRAGM COVER 1303 W/B0LTS
72181500	1	CONNECTING ROD, CENTER 1303
72181600	1	CONNECTING ROD, SIDE MOD.1300
75073600	1	PUMP KIT 1303 MM "06"

WWW.RG-TRONIK.PL

Housing for Black Diaphragm-

This groove on the lower housing of the Pressure Damper is for the BLACK diaphragm (240122). Never upgrade diaphragms to the YELLOW style unless you also upgrade Pressure Dampers to the housing style shown below.

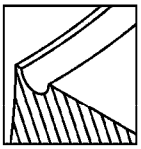

The **YELLOW** style diaphragm will not seal correctly in this housing.

Housing for Yellow Diaphragm-

The groove on the lower housing of a the Pressure Damper is recognized by the extra lip on the bottom inside of the groove. For this style Pressure Damper, you need the YELLOW diaphragm (334265).

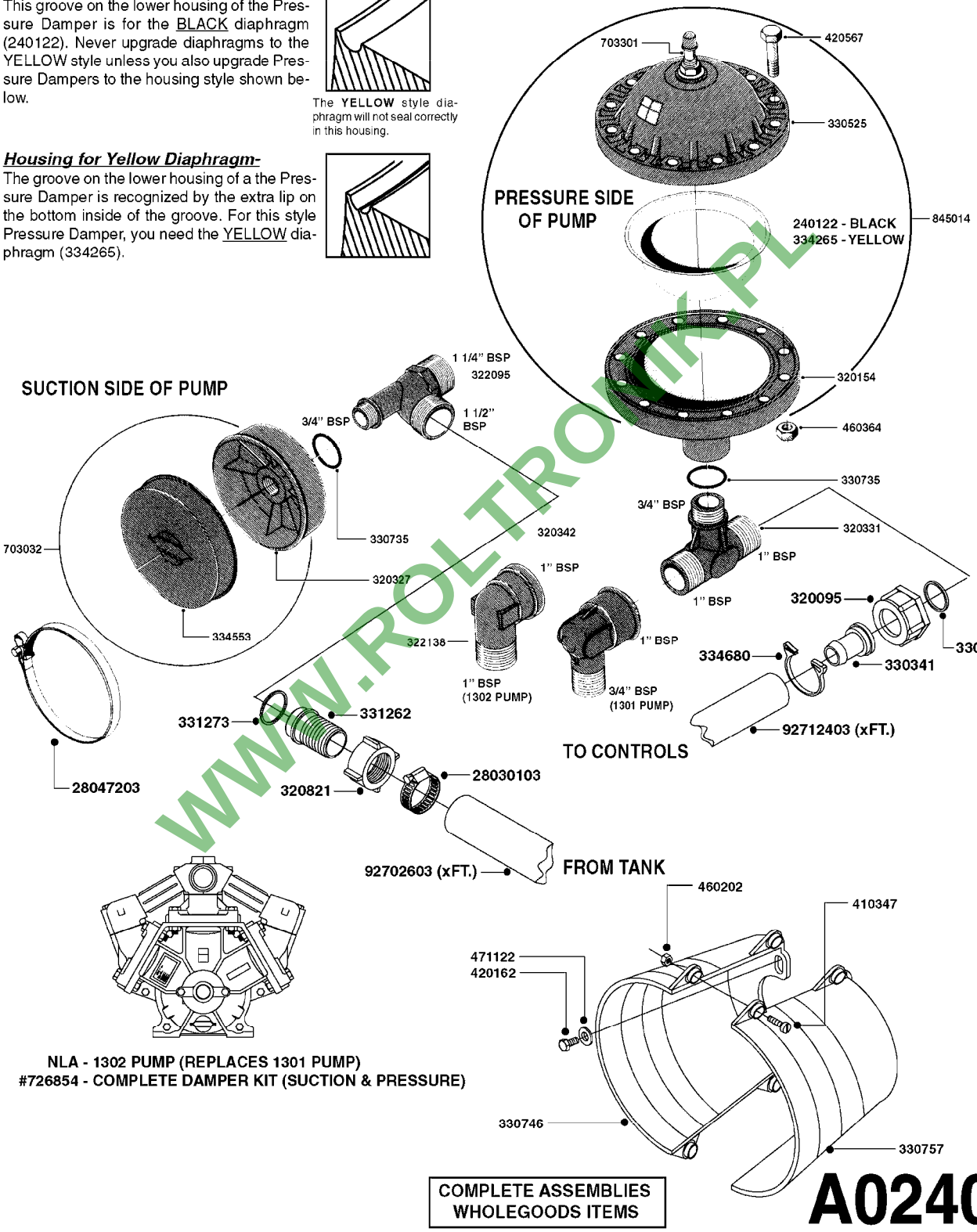

NLA - 1302 PUMP (REPLACES 1301 PUMP)
#726854 - COMPLETE DAMPER KIT (SUCTION & PRESSURE)

COMPLETE ASSEMBLIES
WHOLEGOODS ITEMS

A0240

WWW.ROLTRONIK.PL

parts-nº	order qty	description
240122	1	DIAPHRAGM FOR PRES.DAMP.(EPDM)
320095	1	FITT.DK NUT 1" BSP
320154	1	AIR BOTTLE, BOTTOM PART
320327	1	HOUSING F. SUCTION AIR BOTTLE
320331	1	FITT.DK TEE 1" - 1" - 3/4" BSP
320342	1	FITT.DK EL 3/4"M X 1"F BSP
320821	1	FITT.DK NUT 1-1/2" BSP
322095	1	FITT.DK TEE 1-1/2 X1-1/4 X3/4" BSP
322138	1	FITT.DK ELB 1"M X 1"F BSP
330326	1	O-RING D30/D24X2 F.1"NUT
330341	1	FITT.DK HB 1" F. 1" NUT
330525	1	AIR BOTTLE, TOP HALF
330735	1	O-RING D30/D26X2
330746	1	GUARD PTO LOWER PART SHORT
330757	1	GUARD PTO UPPER PART SHORT
331262	1	FITT.DK HB 1-1/2" F. 1-1/2"NUT
331273	1	O-RING D44/D38X2 F.1-1/2"
334265	1	DIAPHRAGM F. PRESS DAMP.NITRIL
334553	1	DIAPHRAGM F.SUCTION AIR BOTTLE
334680	1	CLAMP HOSE PLASTIC 1"
410347	1	SCREW M6X20 8.8
420162	1	BOLT HEX 8.8 DEL 3/8"x15MM
420567	1	BOLT HEX 8.8 DEL M8X30 FT
460202	1	NUT HEX M6
460364	1	NUT HEX M8 GALV.
471122	1	WASHER, M10, Ø20/10.5X 2.0, SS
703032	1	SUCTION AIR BOTTLE 3/4" COMPL.
703301	1	VALVE FOR AIR BOTTLE
726854	1	DAMPER KIT 1203/1303
845014	1	AIR BOTTLE COMPLETE HJ73
28030103	1	CLAMP HOSE GEAR P5/4-S1.5"6724
28047203	1	CLAMP HOSE GEAR 60 X 80 6756
92702603	1	HOSE PVC SUCT GRAY 1-1/2"
92712403	1	HOSE R X1" X300PSI WP X0012"

WWW.POLTRONIK.PL

PUMP - 361 W/MOUNTING BASE
A0250-HIN, 01:01:16

Page 0

Date 16.03.2016 13:34

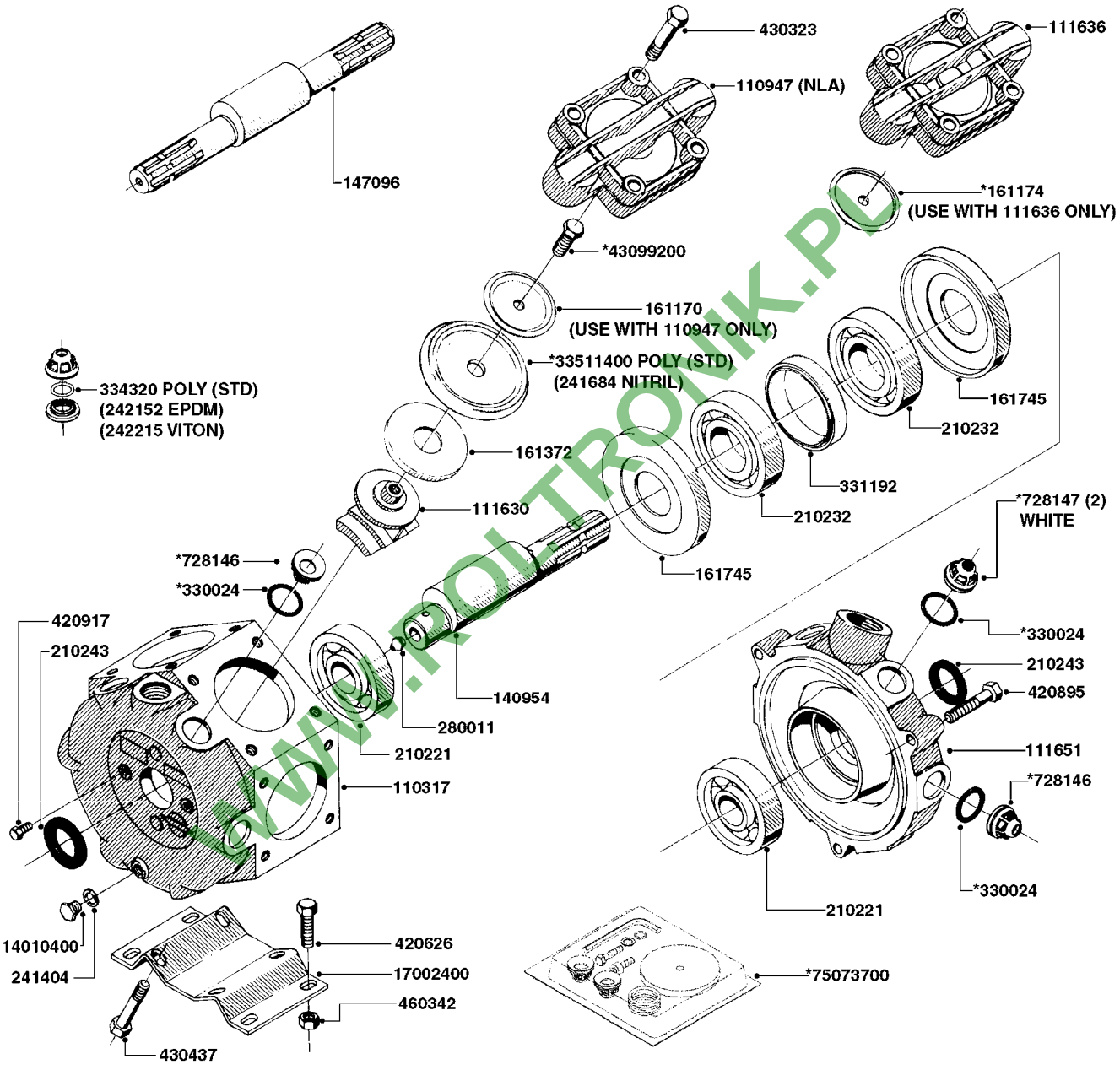

WWW.ROLTRONIK.PL

COMPLETE PUMP
(NLA) REPLACED BY 821643 (363 - 540 RPM)

COMPLETE ASSEMBLIES
WHOLEGOODS ITEMS

A0250

PUMP - 361 W/MOUNTING BASE
A0250-HIN, 01:01:16

parts-nº	order qty	description
110317	1	PUMP CASING MODEL 360/361 PNTD
110947	1	VALVE COVER MDL 361 (PAINTED)
111630	1	CONNECTING ROD 363/364-10 PUMP
111636	1	VALVE COVER 363 HEAVY DUTY
111651	1	CASTING F.363 1.5" PUMP(FRONT)
140954	1	CRANK SHAFT MODEL 360/361
147096	1	CRANK SHAFT 361/9.5 THROUGH
161170	1	DIAPH UPPER DISC, 321/361/363
161174	1	DIAPHRAGM DISC SS 361/363/364 PUMP
161372	1	DIAPHRAGM BACKING DISC,320-361
161745	1	METAL SPACER F.363/463
210221	1	BEARING BALL 6407
210232	1	BEARING BALL 6310
210243	1	SEAL OIL 35 X 47 X 7
241404	1	DOWTY SEAL 1/4"
241684	1	DIAPHRAGM MODEL 361 NITRIL
242152	1	O-RING D18.2X3 EPDM
242215	1	O-RING D18X3 VITON
280011	1	GREASE NIPPLE 3/8' SAE H TR
330024	1	O-RING D41,1/D34.5 X 3,5
331192	1	SPACER, MODEL 361/363
334320	1	O-RING D18X3 POLYURETHANE
420626	1	BOLT HEX 8.8 DEL M10X20 FT
420895	1	BOLT HEX 8.8 RAW M10X60
420917	1	BOLT HEX 8.8 RAW M8X12 FT
430323	1	BOLT HEX 8.8 DEL M12X60
430437	1	BOLT HEX 8.8 RAW M12X65
460342	1	NUT HEX M10 DEL DIN934
728146	1	VALVE FOR 361(726890/707932)
728147	1	VALVE FOR 361 WHITE WITH HOLE
821643	1	PUMP 363/10 1.5"SUC 540RPM OSP
14010400	1	PLUG 1/4" BSP
17002400	1	FOOT F/363 PUMP (PAINTED)
33511400	1	DIAPHRAGM PUMP 361/361/363/364 PUR
43099200	1	BOLT HEX SS M12 X 30 DIN933 A4
75073700	1	PUMP KIT 361/363 "06"

WWW.RCL-TRONIK.PL

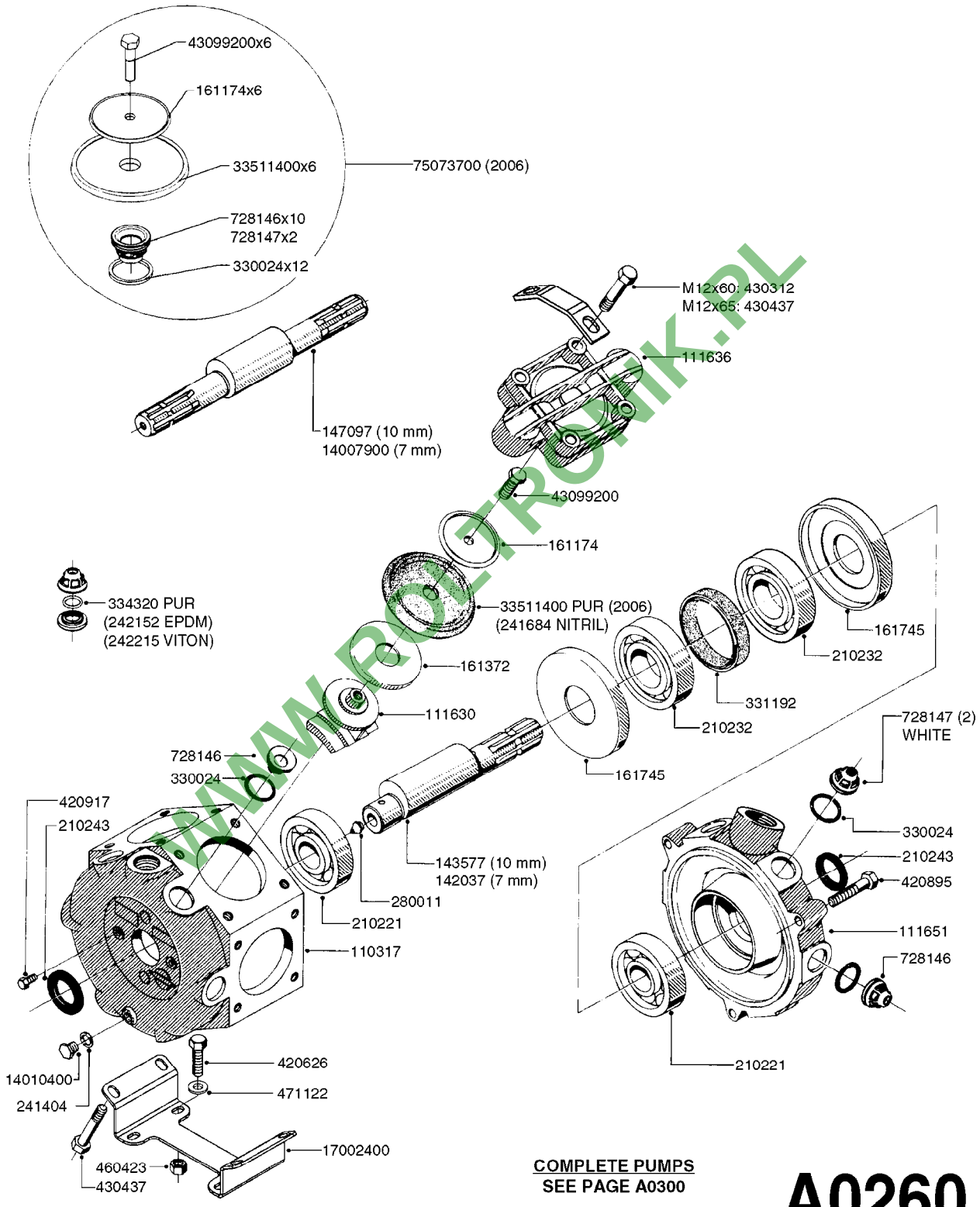

WWW.ROLTRONIK.PL

COMPLETE PUMPS
SEE PAGE A0300

A0260

PUMP - 363 W/MOUNTING BASE
A0260-HIN, 01:01:16

parts-n°	order qty	description
110317	1	PUMP CASING MODEL 360/361 PNTD
111630	1	CONNECTING ROD 363/364-10 PUMP
111636	1	VALVE COVER 363 HEAVY DUTY
111651	1	CASTING F.363 1.5" PUMP(FRONT)
142037	1	CRANK SHAFT 361-20
143577	1	CRANK SHAFT F.363/462/463-10mm
147097	1	CRANK SHAFT 363-463/10 THROUGH
161174	1	DIAPHRAGM DISC SS 361/363/364 PUMP
161372	1	DIAPHRAGM BACKING DISC,320-361
161745	1	METAL SPACER F.363/463
210221	1	BEARING BALL 6407
210232	1	BEARING BALL 6310
210243	1	SEAL OIL 35 X 47 X 7
241404	1	DOWTY SEAL 1/4"
241684	1	DIAPHRAGM MODEL 361 NITRIL
242152	1	O-RING D18.2X3 EPDM
242215	1	O-RING D18X3 VITON
280011	1	GREASE NIPPLE 3/8' SAE H TR
330024	1	O-RING D41,1/D34.5 X 3,5
331192	1	SPACER, MODEL 361/363
334320	1	O-RING D18X3 POLYURETHANE
420626	1	BOLT HEX 8.8 DEL M10X20 FT
420895	1	BOLT HEX 8.8 RAW M10X60
420917	1	BOLT HEX 8.8 RAW M8X12 FT
430312	1	BOLT HEX 8.8 RAW M12X60
430437	1	BOLT HEX 8.8 RAW M12X65
460423	1	NUT HEX M10X1.5 LOCK
471122	1	WASHER, M10, Ø20/10.5X 2.0, SS
728146	1	VALVE FOR 361(726890/707932)
728147	1	VALVE FOR 361 WHITE WITH HOLE
14007900	1	CRANK 363/462/463-7mm 540/THRU
14010400	1	PLUG 1/4" BSP
17002400	1	FOOT F/363 PUMP (PAINTED)
33511400	1	DIAPHRAGM PUMP 361/361/363/364 PUR
43099200	1	BOLT HEX SS M12 X 30 DIN933 A4
75073700	1	PUMP KIT 361/363 "06"

WWW.RCL-TRONIK.PL

PUMP - 363/1000 RPM W/MOUNTING
A0270-HIN, 01:01:16

Page 0

Date 16.03.2016 13:34

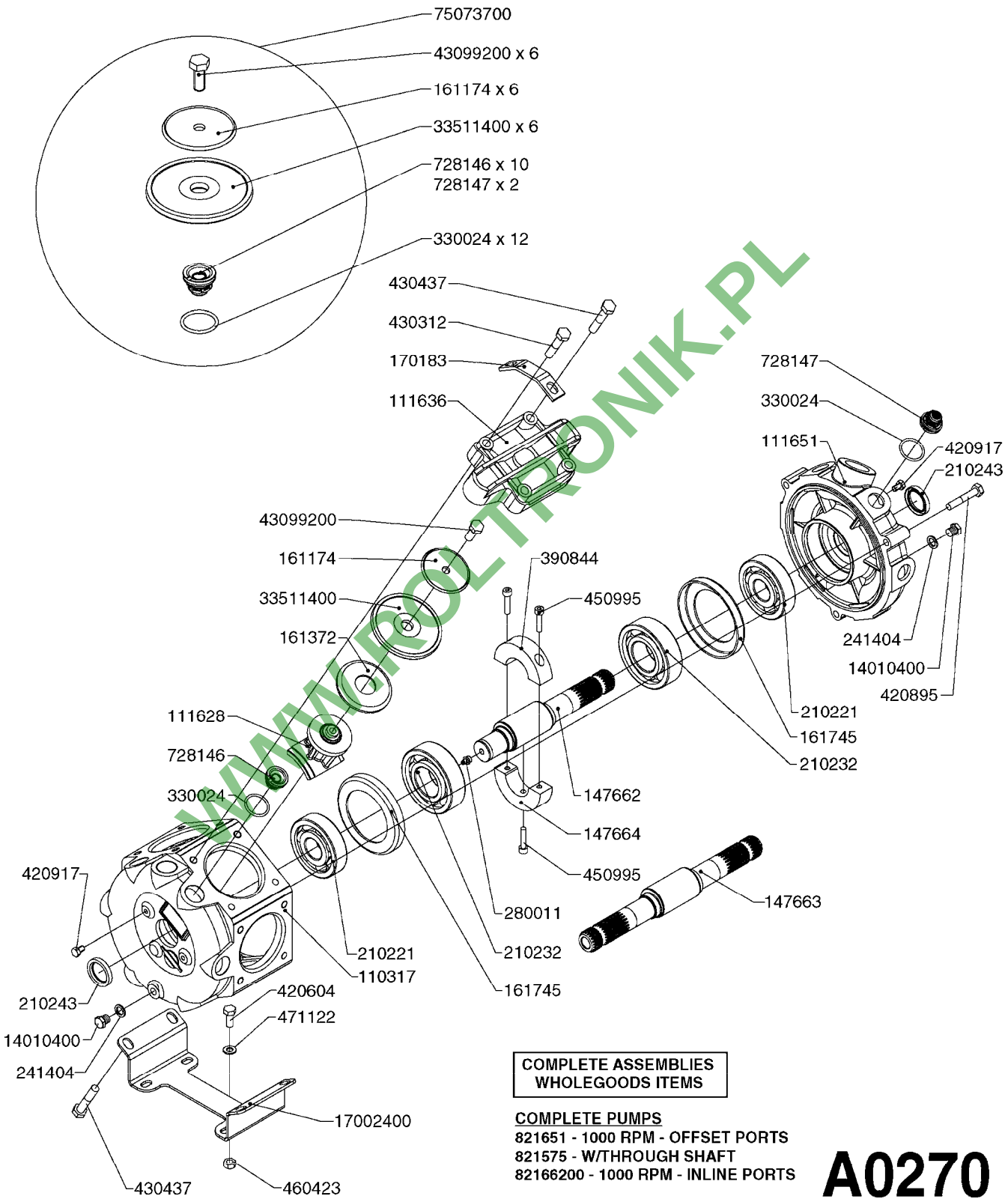

WWW.ROLTRONIK.PL

COMPLETE ASSEMBLIES
WHOLEGOODS ITEMS

COMPLETE PUMPS
821651 - 1000 RPM - OFFSET PORTS
821575 - W/THROUGH SHAFT
82166200 - 1000 RPM - INLINE PORTS

A0270

parts-nº	order qty	description
110317	1	PUMP CASING MODEL 360/361 PNTD
111628	1	CONNECTING ROD 363/5.5 PUMP
111636	1	VALVE COVER 363 HEAVY DUTY
111651	1	CASTING F.363 1.5" PUMP(FRONT)
147662	1	CRANK SHAFT F.363/463-5.5MM
147663	1	CRANK SHAFT 363/463-5.5 THROUG
147664	1	COUNTERBALANCE 363/463 WEIGHT
161174	1	DIAPHRAGM DISC SS 361/363/364 PUMP
161372	1	DIAPHRAGM BACKING DISC,320-361
161745	1	METAL SPACER F.363/463
170183	1	LIFT STRAP F.PUMP 360/361/462
210221	1	BEARING BALL 6407
210232	1	BEARING BALL 6310
210243	1	SEAL OIL 35 X 47 X 7
241404	1	DOWTY SEAL 1/4"
280011	1	GREASE NIPPLE 3/8' SAE H TR
330024	1	O-RING D41,1/D34.5 X 3,5
390844	1	COUNTERBALANCE 363/463 POM
420604	1	BOLT HEX 8.8 DEL M10X25 FT DIN933
420895	1	BOLT HEX 8.8 RAW M10X60
420917	1	BOLT HEX 8.8 RAW M8X12 FT
430312	1	BOLT HEX 8.8 RAW M12X60
430437	1	BOLT HEX 8.8 RAW M12X65
450995	1	BOLT ALLEN M8X30 DIN 912 RAW
460423	1	NUT HEX M10X1.5 LOCK
471122	1	WASHER, M10, Ø20/10.5X 2.0, SS
728146	1	VALVE FOR 361(726890/707932)
728147	1	VALVE FOR 361 WHITE WITH HOLE
821575	1	PUMP 363/5.5 THROUGH SHAFT
821651	1	PUMP 363/5.5/1000 OSP
14010400	1	PLUG 1/4" BSP
17002400	1	FOOT F/363 PUMP (PAINTED)
33511400	1	DIAPHRAGM PUMP 361/361/363/364 PUR
43099200	1	BOLT HEX SS M12 X 30 DIN933 A4
75073700	1	PUMP KIT 361/363 "06"
82166200	1	PUMP 363/5.5 1.5"SUC 1000RPM

WWW.RO-TRONIK.PL

HARDI	**Agroparts: www.HARDI-INTERNATIONAL.com**	
	PUMP - 364 540/1000 RPM A0280-HIN, 16:02:16	Page 0 Date 16.03.2016 13:34

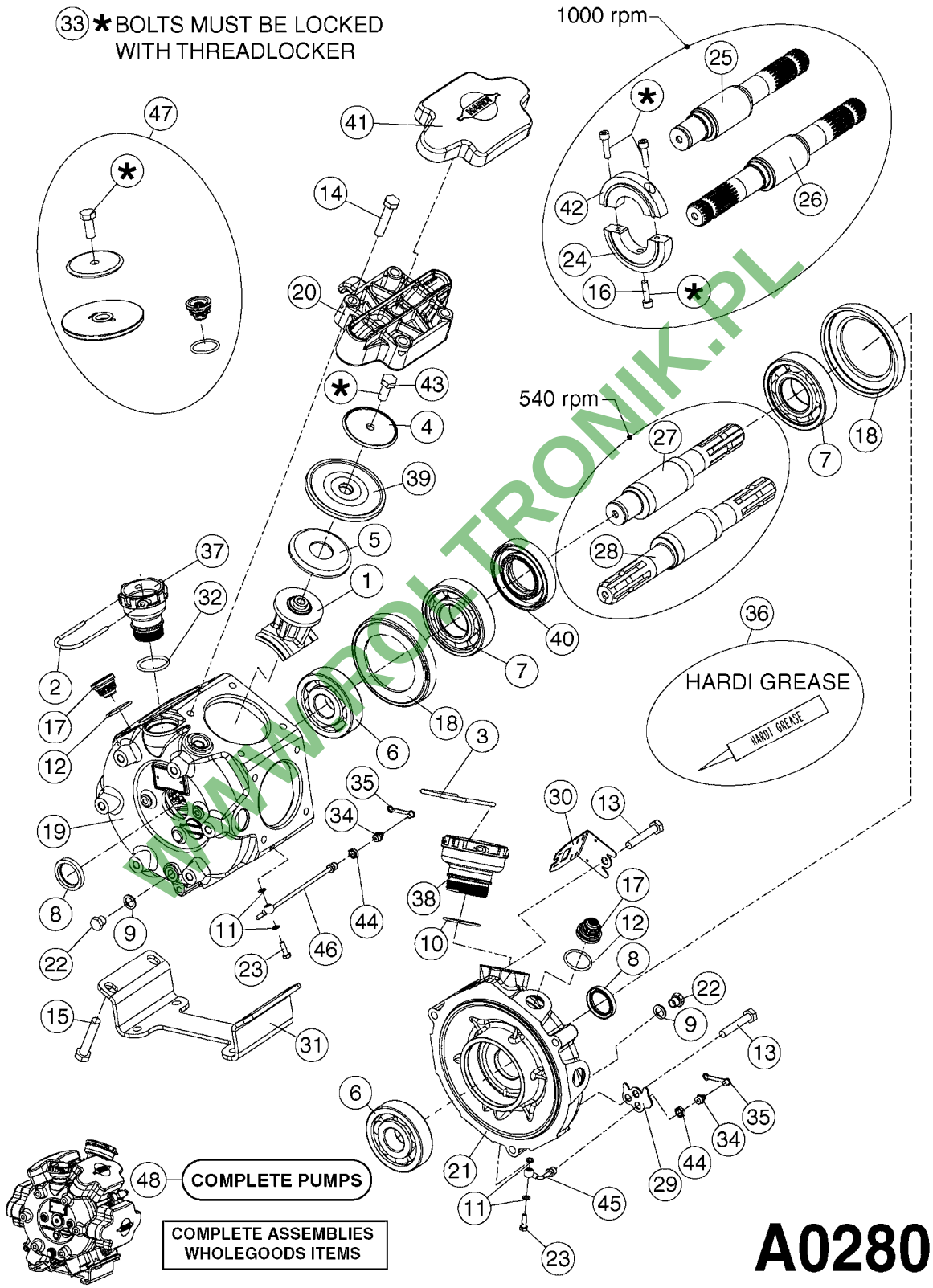

WWW.AGRO-TRONIK.PL

Agroparts: www.HARDI-INTERNATIONAL.com

PUMP - 364 540/1000 RPM
A0280-HIN, 16:02:16

Date 16.03.2016 13:34

Pos.	parts-n°	order qty	description
1	111622	1	CONNECTING ROD 463/5.5MM
1	111628	1	CONNECTING ROD 363/5.5 PUMP
1	111629	1	CONNECTING ROD 363/364-7 PUMP
1	111630	1	CONNECTING ROD 363/364-10 PUMP
2	145996	1	FITT.DK S-67 FORK
3	145997	1	FITT.DK S-93 FORK
4	161174	1	DIAPHRAGM DISC SS 361/363/364 PUMP
5	161372	1	DIAPHRAGM BACKING DISC,320-361
6	210221	1	BEARING BALL 6407
7	210232	1	BEARING BALL 6310
8	210243	1	SEAL OIL 35 X 47 X 7
9	241404	1	DOWTY SEAL 1/4"
10	242225	1	O-RING D45.0 X 4.0 RUBBER
11	242374	1	WASHER Ø10/ø6X1 COPPER
12	330024	1	O-RING D41,1/D34.5 X 3,5
13	420895	1	BOLT HEX 8.8 RAW M10X60
14	430312	1	BOLT HEX 8.8 RAW M12X60
15	430437	1	BOLT HEX 8.8 RAW M12X65
16	450995	1	BOLT ALLEN M8X30 DIN 912 RAW
17	728146	1	VALVE FOR 361(726890/707932)
18	11171900	1	METAL SPACER F. 364/464 MACHINED
19	11172000	1	PUMP HOUSE 364 MACHINED 5/4" BSP RED
20	11172800	1	VALVE COVER 364 MACHINED RED
21	11173200	1	FRONTPART 364, 1½" BSP RED
22	14010400	1	PLUG 1/4" BSP
23	14120400	1	BANJOBOLT M6 X 19
24	14120700	1	COUNTERWEIGHT 364/464-1000
25	14137300	1	CRANKSHAFT 364/464-5.5 1000
26	14137900	1	CRANKSHAFT 364/464-5.5 GG 1000
27	14137600	1	CRANKSHAFT 364/464-10
28	14138200	1	CRANKSHAFT 364/464-10 GG
29	16382900	1	GREASE NIPPLE PLATE, 364
30	16390600	1	BRACKET FOR RPM SENSOR
31	17002400	1	FOOT F/363 PUMP (PAINTED)
32	24266600	1	O-RING D 38,0 X 4,0 70SH.NITR
33	28045503	1	LOCTITE 262 .5ML (.017oz.)
34	28163300	1	GREASE NIPPLE H1 M6X1 DIN 7412
35	28163400	1	CAP F. GREASENIPPLE YELLOW M6X1
36	28164600	1	HARDI PUMP GREASE S3 V550L 1
37	32242200	1	FITTING S67 5/4" KON. RG 2014
38	32242300	1	NIPPLE S93 1,5' KON.RG 2014
39	33511400	1	DIAPHRAGM PUMP 361/361/363/364 PUR
40	33524200	1	DISTANCE RING/GREASE SPLIT
41	33524300	1	COVER PLASTIC 364 PUMP
42	39136200	1	HALFPART 364/464-1000
43	43099200	1	BOLT HEX SS M12 X 30 DIN933 A4
44	46134000	1	NUT HEX M10x1 H=2.3 NV=14 ELZIN
45	61096800	1	BANJOTUBE SHORT 364 COMPL.
46	61096900	1	BANJOTUBE LONG 364 COMPL.
47	75585900	1	PUMP KIT 364
48	82168100	1	PUMP 464/5.5 THROUGH SHAFT 1000RPM
48	82169500	1	PUMP 364-5.5-MED-1000
48	82169700	1	PUMP 364-5.5-MOD2-1000-120-AUS
48	82170000	1	PUMP 364-10-STD-540
48	82170300	1	PUMP 364-10-MOD-540-GG
48	82170400	1	PUMP 364-10-MOD-540-120

WWW.ROLTRONIK.PL

SUCTION SIDE OF PUMP

PRESSURE SIDE OF PUMP

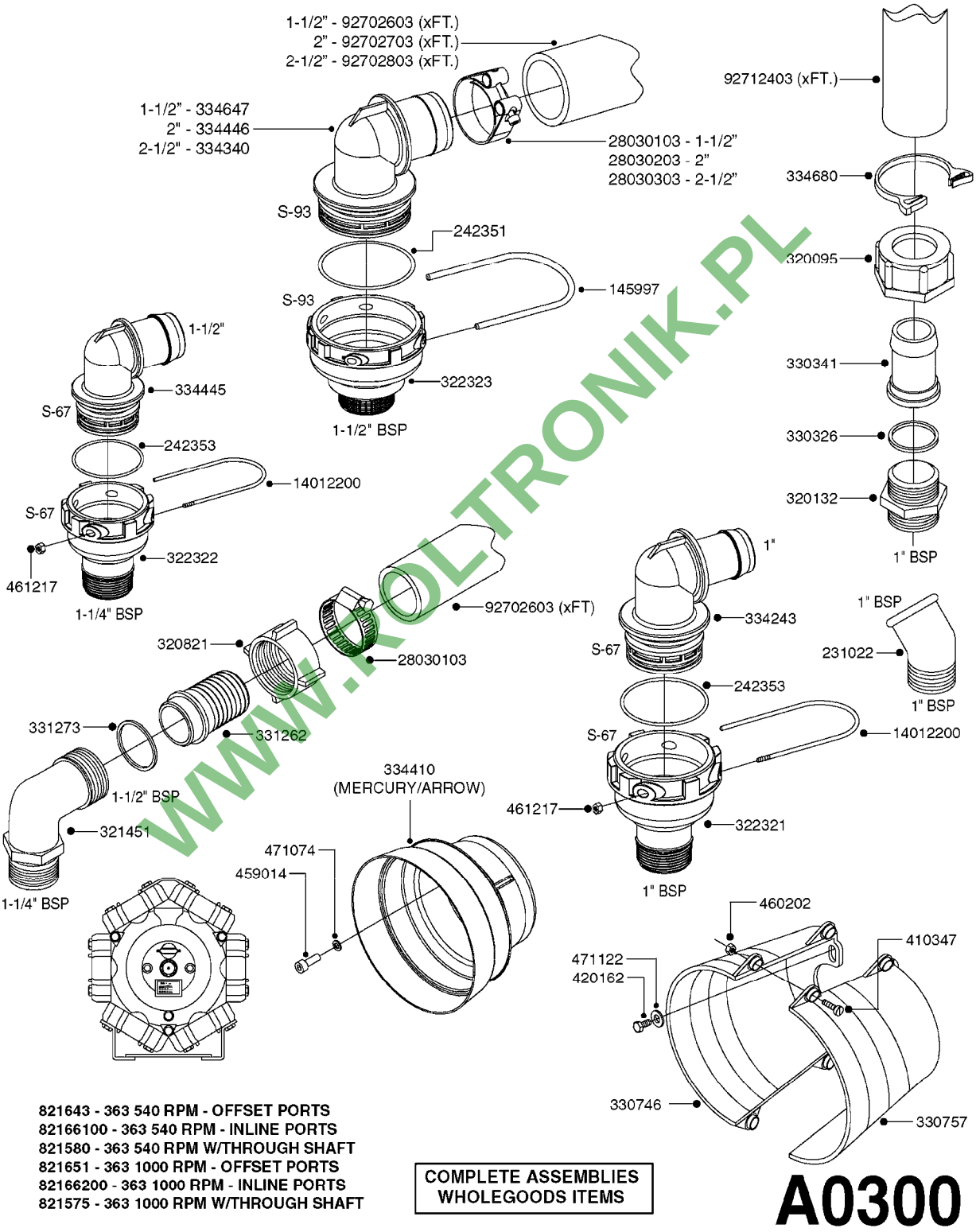

821643 - 363 540 RPM - OFFSET PORTS
82166100 - 363 540 RPM - INLINE PORTS
821580 - 363 540 RPM W/THROUGH SHAFT
821651 - 363 1000 RPM - OFFSET PORTS
82166200 - 363 1000 RPM - INLINE PORTS
821575 - 363 1000 RPM W/THROUGH SHAFT

COMPLETE ASSEMBLIES
WHOLEGOODS ITEMS

A0300

WWW.ROLTRONIK.PL

Agroparts: www.HARDI-INTERNATIONAL.com

PUMP - 361/363FITTINGS
A0300-HIN, 01:01:16

Date 16.03.2016 13:34

parts-n°	order qty	description
145997	1	FITT.DK S-93 FORK
231022	1	FITT.DK ELB. 1' BSP GF 121
242351	1	O-RING D69.5X3.0 VITON F.S-93
242353	1	O-RING D44.2X3.0 VITON F.S-67
320095	1	FITT.DK NUT 1" BSP
320132	1	FITT.DK HN 1" BSP
320821	1	FITT.DK NUT 1-1/2" BSP
321451	1	FITT.DK ELB.1-1/2 X1-1/4 80DEG
322321	1	FITT.DK S-67 X 1"BSP MALE
322322	1	FITT.DK S-67 X 1-1/4"BSP MALE
322323	1	FITT.DK S-93 X 1-1/2"BSP MALE
330326	1	O-RING D30/D24X2 F.1"NUT
330341	1	FITT.DK HB 1" F. 1" NUT
330746	1	GUARD PTO LOWER PART SHORT
330757	1	GUARD PTO UPPER PART SHORT
331262	1	FITT.DK HB 1-1/2" F. 1-1/2"NUT
331273	1	O-RING D44/D38X2 F.1-1/2"
334243	1	FITT.DK S-67 ELB.1"
334340	1	FITT.DK S-93 ELBOW 2.5"
334410	1	PROTECTION GUARD
334445	1	FITT.DK S-67 ELB.1-1/2"
334446	1	FITT.DK S-93 ELB.2" PVC
334647	1	FITT.DK S93 ELB 1-1/2" 90 PVC
334680	1	CLAMP HOSE PLASTIC 1"
410347	1	SCREW M6X20 8.8
420162	1	BOLT HEX 8.8 DEL 3/8"x15MM
459014	1	ALLEN SCREW M8 X 15 GALV.DIN93
460202	1	NUT HEX M6
461217	1	NUT HEX M5 LOCK
471074	1	WASHER M8 ELZ
471122	1	WASHER, M10, Ø20/10.5X 2.0, SS
821575	1	PUMP 363/5.5 THROUGH SHAFT
821580	1	PUMP 363/10 THROUGH SHAFT
821643	1	PUMP 363/10 1.5"SUC 540RPM OSP
821651	1	PUMP 363/5.5/1000 OSP
14012200	1	FITT.DK S-67 FORK W/M5 THREADS
28030103	1	CLAMP HOSE GEAR P5/4-S1.5"6724
28030203	1	CLAMP HOSE T-BOLT S2" 235-67
28030303	1	CLAMP HOSE T-BOLT S2.5" 235-76
82166100	1	PUMP 363/10 1.5"SUC 540RPM
82166200	1	PUMP 363/5.5 1.5"SUC 1000RPM
92702603	1	HOSE PVC SUCT GRAY 1-1/2"
92702703	1	HOSE PVC SUCT GRAY 2"
92702803	1	HOSE PVC SUCT GRAY 2.5"
92712403	1	HOSE R X1" X300PSI WP X0012"

WWW.ROLTRONIK.PL

PUMP - 462 W/MOUNTING BASE
A0320-HIN, 01:01:16

Page 0

Date 16.03.2016 13:34

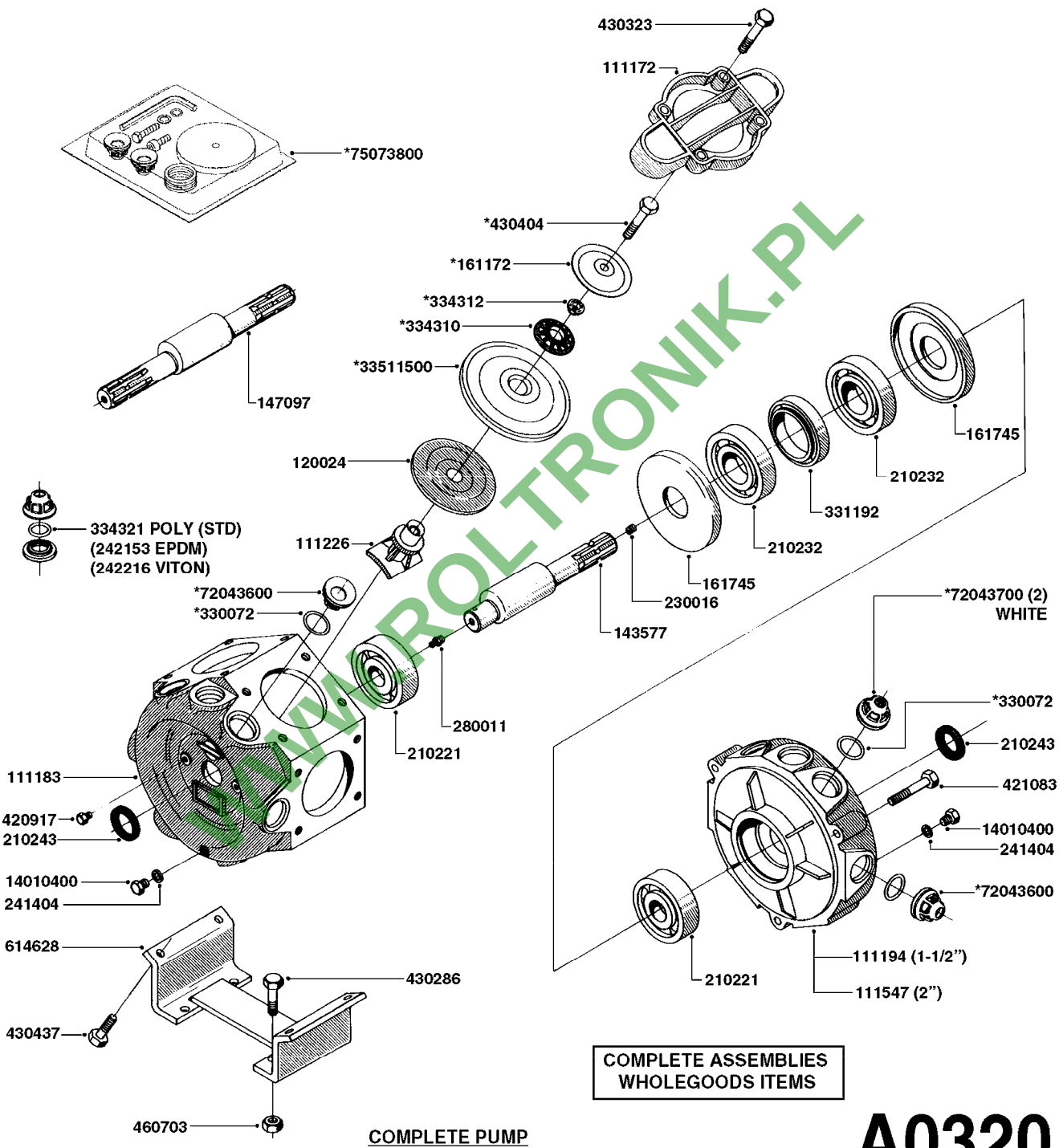

COMPLETE ASSEMBLIES
WHOLEGOODS ITEMS

COMPLETE PUMP
(NLA) REPLACED BY 464 PUMP (SEE PAGE A0350)

A0320

WWW.ROLTRONIK.PL

PUMP - 462 W/MOUNTING BASE
A0320-HIN, 01:01:16

parts-n°	order qty	description
111172	1	VALVE CHAMBER 460 (PAINTED)
111183	1	PUMP CASTING 460-463 (PAINTED)
111194	1	PUMP CASTING FT.460 (PAINTED)
111226	1	CONNECTING ROD MODEL 460
111547	1	PUMP FRONT 460-463-2'(PAINT)
120024	1	DIAPHRAGM BACK DISC 1200-1300
143577	1	CRANK SHAFT F.363/462/463-10mm
147097	1	CRANK SHAFT 363-463/10 THROUGH
161172	1	DIAPHRAGM DISC F. 1203/1303
161745	1	METAL SPACER F.363/463
210221	1	BEARING BALL 6407
210232	1	BEARING BALL 6310
210243	1	SEAL OIL 35 X 47 X 7
230016	1	PLUG 1/8' BSP TYPE P
241404	1	DOWTY SEAL 1/4"
242153	1	O-RING D26X4 EPDM
242216	1	O-RING VITON F/1202/1302/462
280011	1	GREASE NIPPLE 3/8' SAE H TR
330072	1	O-RING D53.5/D45.5X4
331192	1	SPACER, MODEL 361/363
334310	1	NYLON WASHER 1202/1302/462
334312	1	PLASTIC SPACER F/462
334321	1	O-RING POLY. 34.0x26.0x4.0
420917	1	BOLT HEX 8.8 RAW M8X12 FT
421083	1	BOLT HEX 8.8 DEL M10X65
430286	1	BOLT HEX 8.8 DEL M12X30 FT
430323	1	BOLT HEX 8.8 DEL M12X60
430404	1	BOLT HEX 8.8 DEL M12X50
430437	1	BOLT HEX 8.8 RAW M12X65
460703	1	NUT HEX M12X1.75 LOCK DIN985
614628	1	FOOT FOR PUMP 460-463 PAINTED
14010400	1	PLUG 1/4" BSP
33511500	1	DIAPHRAGM 462 PUR 2006
72043600	1	VALVE FOR 462/463
72043700	1	VALVE FOR 462/463 W.VENT HOLE
75073800	1	PUMP KIT 461/462 "06"

WWW.RC-TRONIK.PL

PUMP REPAIR KIT

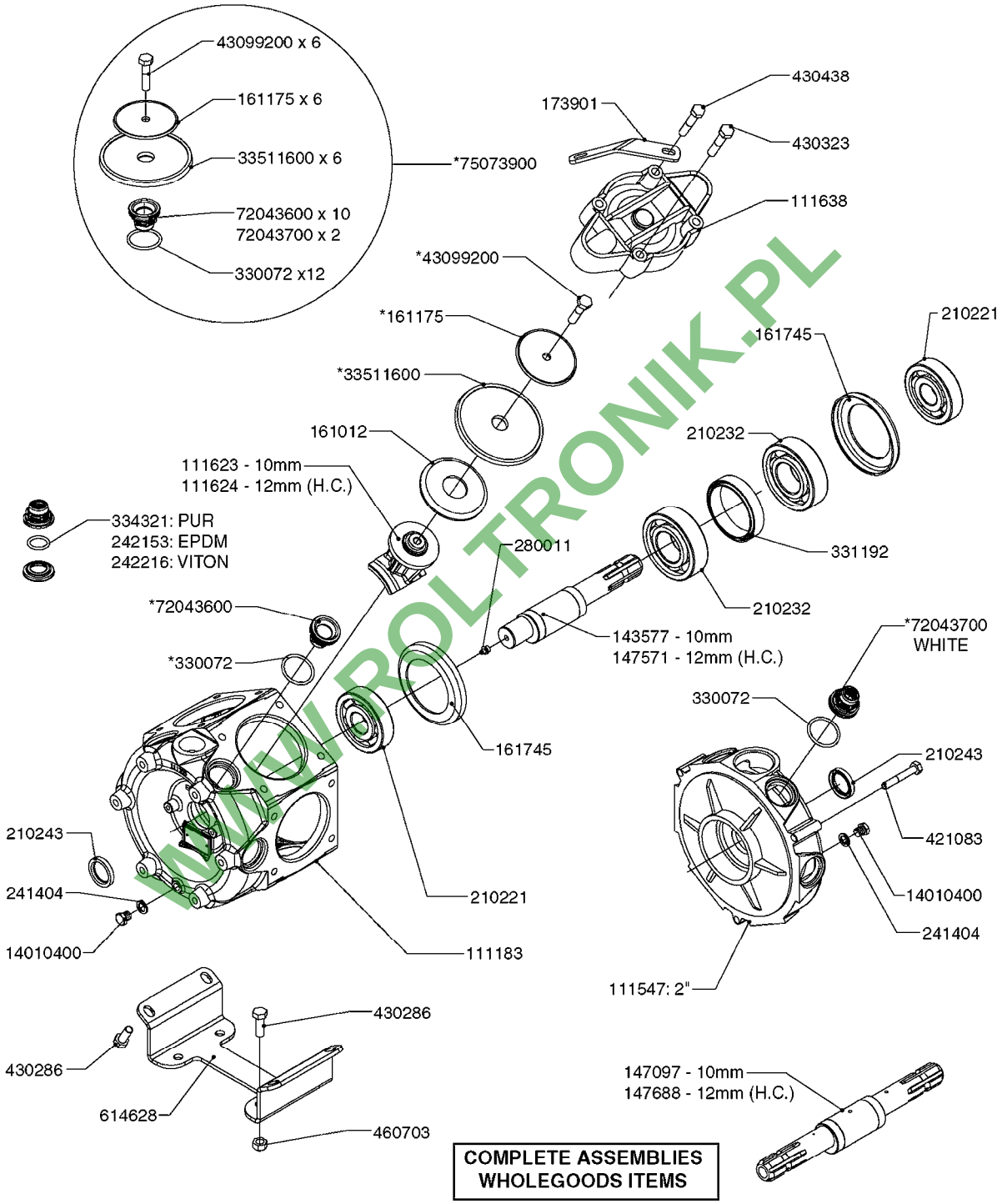

COMPLETE ASSEMBLIES WHOLEGOODS ITEMS

COMPLETE PUMPS

821587 - 463/10 2" W/THROUGH SHAFT (540 RPM)
82166300 - 463/12 2" (540 RPM H.C. INLINE PORTS)
463/12 2" (540 RPM H.C. OFFSET PORTS) REPLACED BY 82168700 (PAGE A0350)

A0330

WWW.ROLTRONIK.PL

PUMP - 463 W/ MOUNTING BASE
A0330-HIN, 01:01:16

Date 16.03.2016 13:34

parts-n°	order qty	description
111183	1	PUMP CASTING 460-463 (PAINTED)
111547	1	PUMP FRONT 460-463-2'(PAINT)
111623	1	CONNECTING ROD 463/10MM
111624	1	CONNECTING ROD 463/12MM
111638	1	VALVE COVER 463 HC+1000 VERS.
143577	1	CRANK SHAFT F.363/462/463-10mm
147097	1	CRANK SHAFT 363-463/10 THROUGH
147571	1	CRANK SHAFT F.463-12mm
147688	1	CRANK SHAFT 462/12 THROUGH
161012	1	DIAPHRAGM BACKING DISC F. 463
161175	1	DIAPHRAGM DISC F. 463 PUMP
161745	1	METAL SPACER F.363/463
173901	1	LIFT STRAP F.PUMP 463
210221	1	BEARING BALL 6407
210232	1	BEARING BALL 6310
210243	1	SEAL OIL 35 X 47 X 7
241404	1	DOWTY SEAL 1/4"
242153	1	O-RING D26X4 EPDM
242216	1	O-RING VITON F/1202/1302/462
280011	1	GREASE NIPPLE 3/8' SAE H TR
330072	1	O-RING D53.5/D45.5X4
331192	1	SPACER, MODEL 361/363
334321	1	O-RING POLY. 34.0x26.0x4.0
421083	1	BOLT HEX 8.8 DEL M10X65
430286	1	BOLT HEX 8.8 DEL M12X30 FT
430323	1	BOLT HEX 8.8 DEL M12X60
430438	1	BOLT HEX 8.8 DEL M12X65
460703	1	NUT HEX M12X1.75 LOCK DIN985
614628	1	FOOT FOR PUMP 460-463 PAINTED
821587	1	PUMP 463/10 THROUGH SHAFT TWNF
14010400	1	PLUG 1/4" BSP
33511600	1	DIAPHRAGM PUMP 463/464 PUMP PUR
43099200	1	BOLT HEX SS M12 X 30 DIN933 A4
72043600	1	VALVE FOR 462/463
72043700	1	VALVE FOR 462/463 W.VENT HOLE
75073900	1	PUMP KIT 463 "06"
82166300	1	PUMP 463-12 2"SUC 540RPM
82168700	1	PUMP 464/12/540 OFFSET PORTS

WWW.RC-TRONIK.PL

PUMP - 463/1000 RPM W/MOUNTING
A0340-HIN, 01:01:16

Page 0

Date 16.03.2016 13:34

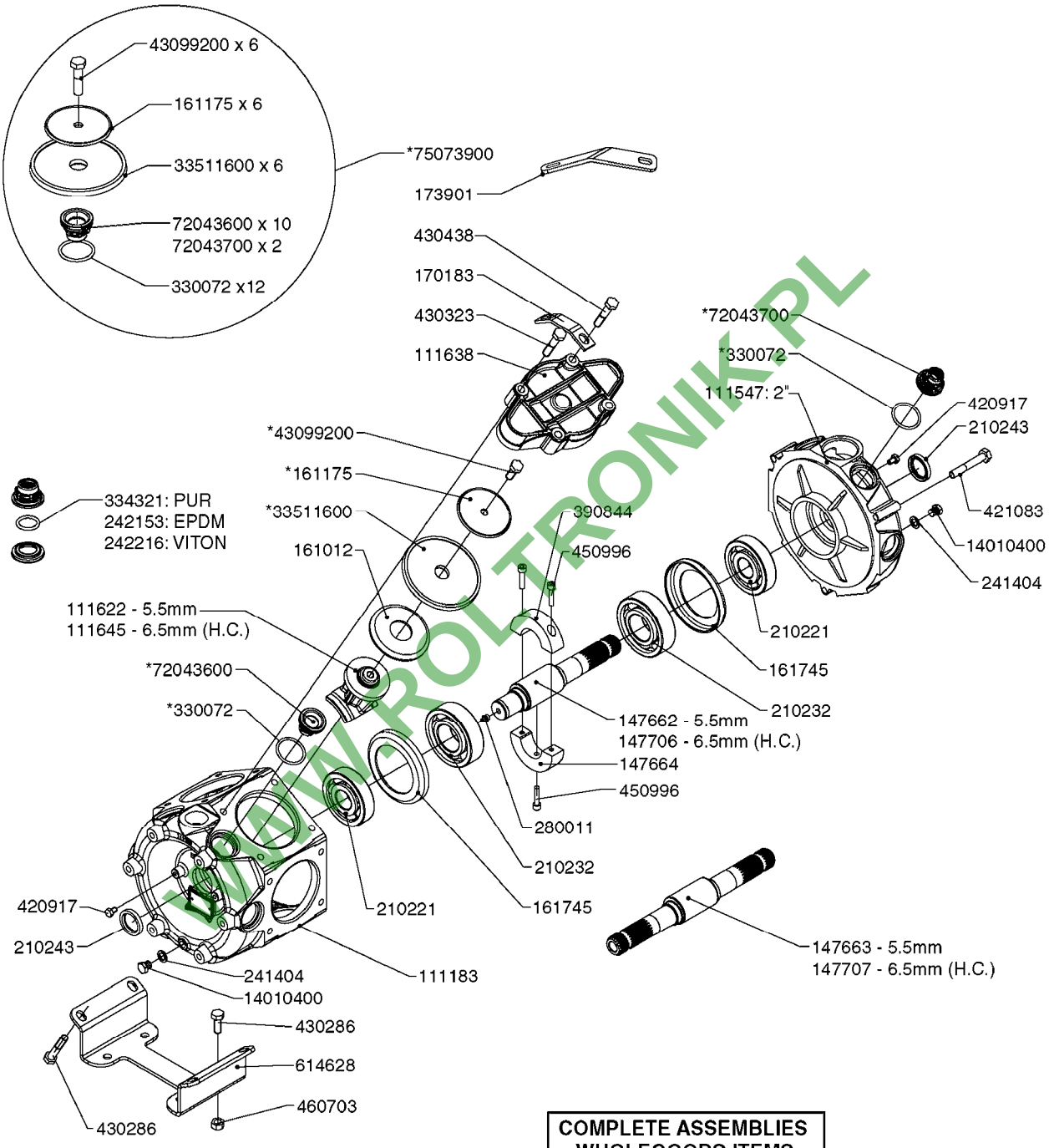

WWW.ROLTRONIK.PL

COMPLETE ASSEMBLIES
WHOLEGOODS ITEMS

COMPLETE PUMPS

821585 - 463/5.5 W/THROUGH SHAFT (1000 RPM)
821587 - 463/10 W/THROUGH SHAFT (540 RPM)
82169400 - 464/6.5 (1000 RPM - H.C. INLINE PORTS)
72293300 - 463/6.5 W/THROUGH SHAFT (1000 RPM)
463/12 (540 RPM H.C. OFFSET PORTS) REPLACED BY 82168700 (PAGE A0350)
463/6.5 (1000 RPM H.C. OFFSET PORTS) REPLACED BY 82168800 (PAGE A0350)

A0340

parts-nº	order qty	description
111183	1	PUMP CASTING 460-463 (PAINTED)
111547	1	PUMP FRONT 460-463-2'(PAINT)
111622	1	CONNECTING ROD 463/5.5MM
111638	1	VALVE COVER 463 HC+1000 VERS.
111645	1	CONNECTING ROD 463/6.5MM
147662	1	CRANK SHAFT F.363/463-5.5MM
147663	1	CRANK SHAFT 363/463-5.5 THROUG
147664	1	COUNTERBALANCE 363/463 WEIGHT
147706	1	CRANK SHAFT F.363/463-6.5MM
147707	1	CRANK SHAFT 363/463-6.5 THROUG
161012	1	DIAPHRAGM BACKING DISC F. 463
161175	1	DIAPHRAGM DISC F. 463 PUMP
161745	1	METAL SPACER F.363/463
170183	1	LIFT STRAP F.PUMP 360/361/462
173901	1	LIFT STRAP F.PUMP 463
210221	1	BEARING BALL 6407
210232	1	BEARING BALL 6310
210243	1	SEAL OIL 35 X 47 X 7
241404	1	DOWTY SEAL 1/4"
242153	1	O-RING D26X4 EPDM
242216	1	O-RING VITON F/1202/1302/462
280011	1	GREASE NIPPLE 3/8' SAE H TR
330072	1	O-RING D53.5/D45.5X4
334321	1	O-RING POLY. 34.0x26.0x4.0
390844	1	COUNTERBALANCE 363/463 POM
420917	1	BOLT HEX 8.8 RAW M8X12 FT
421083	1	BOLT HEX 8.8 DEL M10X65
430286	1	BOLT HEX 8.8 DEL M12X30 FT
430323	1	BOLT HEX 8.8 DEL M12X60
430438	1	BOLT HEX 8.8 DEL M12X65
450996	1	BOLT ALLEN M8X35 DIN 912 RAW
460703	1	NUT HEX M12X1.75 LOCK DIN985
614628	1	FOOT FOR PUMP 460-463 PAINTED
821585	1	PUMP 463/5.5 THRGH SHAFT 1000R
821587	1	PUMP 463/10 THROUGH SHAFT TWNF
14010400	1	PLUG 1/4" BSP
33511600	1	DIAPHRAGM PUMP 463/464 PUMP PUR
43099200	1	BOLT HEX SS M12 X 30 DIN933 A4
72043600	1	VALVE FOR 462/463
72043700	1	VALVE FOR 462/463 W.VENT HOLE
72293300	1	PUMP 463/6.5 MED-2-1000-GG
75073900	1	PUMP KIT 463 "06"
82168700	1	PUMP 464/12/540 OFFSET PORTS
82168800	1	PUMP 464/6.5/1000 OFFSET PORTS
82169400	1	PUMP 464-6.5-STD-2-1000 FK

WWW.KOLTRONIK.PL

HARDI	**Agroparts: www.HARDI-INTERNATIONAL.com**	
	PUMP - 464 540/1000 RPM A0350-HIN, 01:01:16	Page 0 Date 16.03.2016 13:34

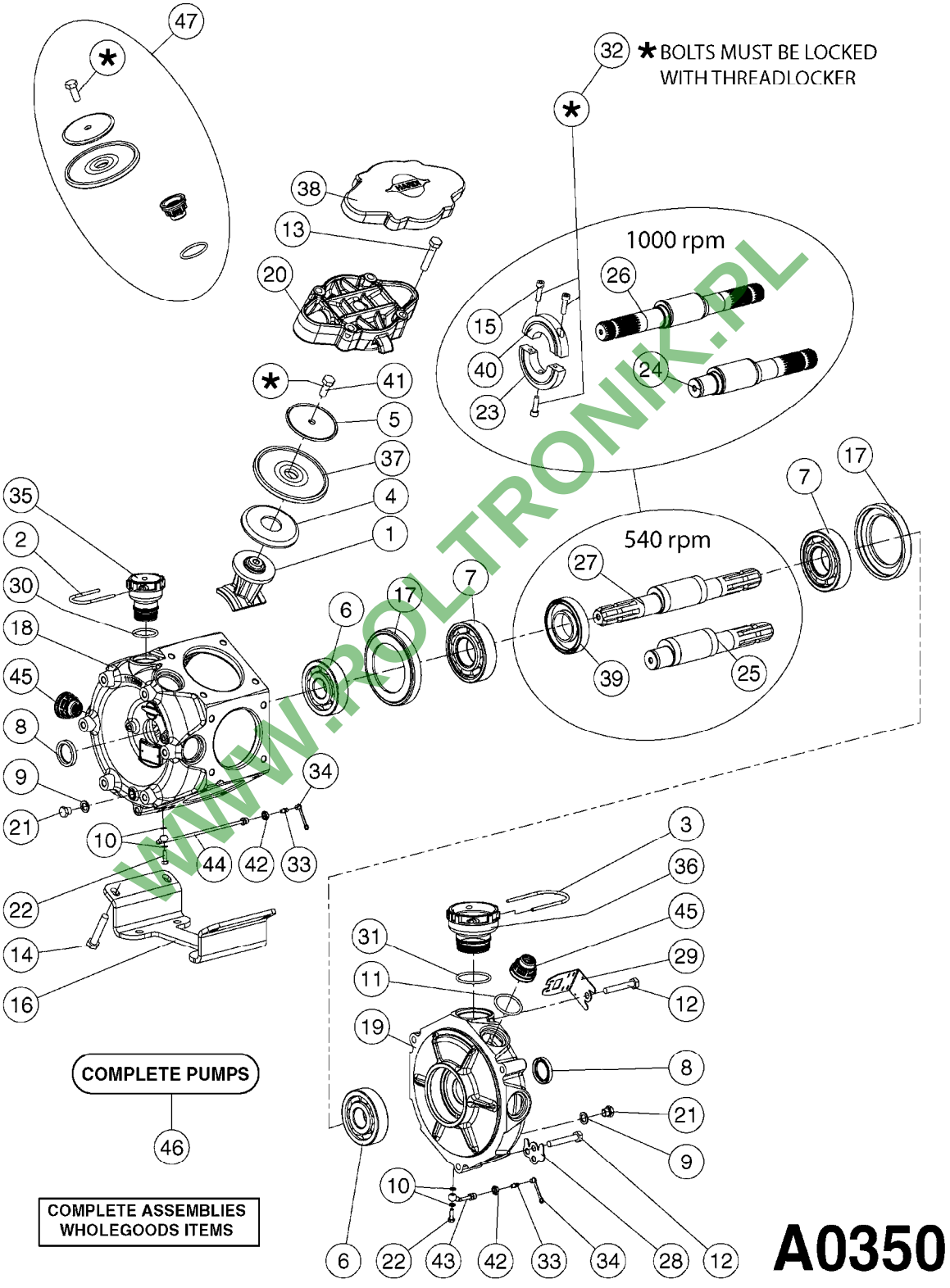

WWW.ROLTRONIK.PL

	Agroparts: www.HARDI-INTERNATIONAL.com	
HARDI	PUMP - 464 540/1000 RPM A0350-HIN, 01:01:16	Page 1 Date 16.03.2016 13:34

Pos.	parts-n°	order qty	description
1	111622	1	CONNECTING ROD 463/5.5MM
1	111623	1	CONNECTING ROD 463/10MM
1	111624	1	CONNECTING ROD 463/12MM
1	111645	1	CONNECTING ROD 463/6.5MM
2	145996	1	FITT.DK S-67 FORK
3	145997	1	FITT.DK S-93 FORK
4	161012	1	DIAPHRAGM BACKING DISC F. 463
5	161175	1	DIAPHRAGM DISC F. 463 PUMP
6	210221	1	BEARING BALL 6407
7	210232	1	BEARING BALL 6310
8	210243	1	SEAL OIL 35 X 47 X 7
9	241404	1	DOWTY SEAL 1/4"
10	242374	1	WASHER Ø10/ø6X1 COPPER
11	330072	1	O-RING D53.5/D45.5X4
12	421072	1	BOLT HEX 8.8 RAW M10X65
13	430312	1	BOLT HEX 8.8 RAW M12X60
14	430437	1	BOLT HEX 8.8 RAW M12X65
15	450995	1	BOLT ALLEN M8X30 DIN 912 RAW
16	614628	1	FOOT FOR PUMP 460-463 PAINTED
17	11171900	1	METAL SPACER F. 364/464 MACHINED
18	11172200	1	PUMP HOUSE 464 MACHINED 5/4" BSP RED
19	11172600	1	FRONTPART 464 MACHINED 2" BSP RED
20	11173000	1	VALVE COVER.464 MACHINED RED
21	14010400	1	PLUG 1/4" BSP
22	14120400	1	BANJOBOLT M6 X 19
23	14120700	1	COUNTERWEIGHT 364/464-1000
24	14137300	1	CRANKSHAFT 364/464-5.5 1000
24	14137400	1	CRANKSHAFT 364/464-6.5 1000
25	14137600	1	CRANKSHAFT 364/464-10
25	14137700	1	CRANKSHAFT 464-12
26	14137900	1	CRANKSHAFT 364/464-5.5 GG 1000
26	14138000	1	CRANKSHAFT 364/464-6.5 GG 1000
27	14138200	1	CRANKSHAFT 364/464-10 GG
27	14138300	1	CRANKSHAFT 464-12 GG
28	16383000	1	GREASE NIPPLE PLATE 464
29	16390600	1	BRACKET FOR RPM SENSOR
30	24266600	1	O-RING D 38,0 X 4,0 70SH.NITR
31	24266800	1	O-RING D 54,0 X 4,0 70SH.NITR
32	28045503	1	LOCTITE 262 .5ML (.017oz.)
33	28163300	1	GREASE NIPPLE H1 M6X1 DIN 7412
34	28163400	1	CAP F. GREASENIPPLE YELLOW M6X1
35	32242200	1	FITTING S67 5/4" KON. RG 2014
36	32242400	1	FITTING S93 2" KON. RG 2014
37	33511600	1	DIAPHRAGM PUMP 463/464 PUMP PUR
38	33524000	1	COVER PLASTIC 464 PUMP
39	33524200	1	DISTANCE RING/GREASE SPLIT
40	39136200	1	HALFPART 364/464-1000
41	43099200	1	BOLT HEX SS M12 X 30 DIN933 A4
42	46134000	1	NUT HEX M10x1 H=2.3 NV=14 ELZIN
43	61097000	1	BANJOTUBE SHORT 464 COMPL.
44	61097100	1	BANJOTUBE LONG 464 COMPL.
45	72043600	1	VALVE FOR 462/463
46	72993500	1	PUMP 464/12-540, CM
46	72993600	1	PUMP 464/6.5 MED-2-1000
46	82168700	1	PUMP 464/12/540 OFFSET PORTS
46	82168800	1	PUMP 464/6.5/1000 OFFSET PORTS
46	82169000	1	PUMP 464/10-MOD-2-540
47	75586000	1	PUMP KIT 464

WWW.ROLTRONIK.PL

SUCTION SIDE OF PUMP (WITH 1-1/2" SUCTION PORT)

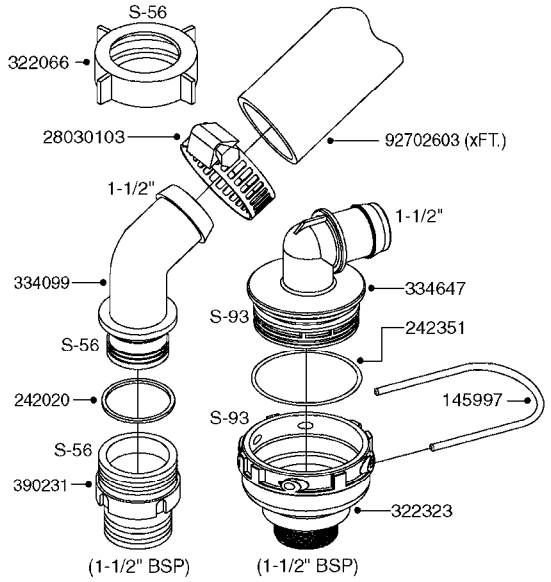

PRESSURE SIDE OF PUMP

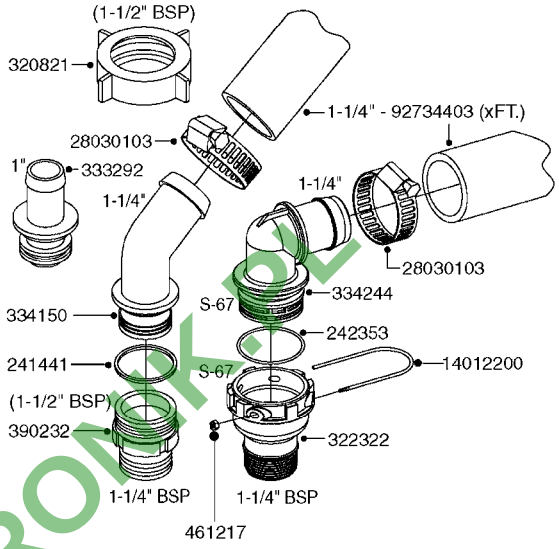

SUCTION SIDE OF PUMP (WITH 2" SUCTION PORT)

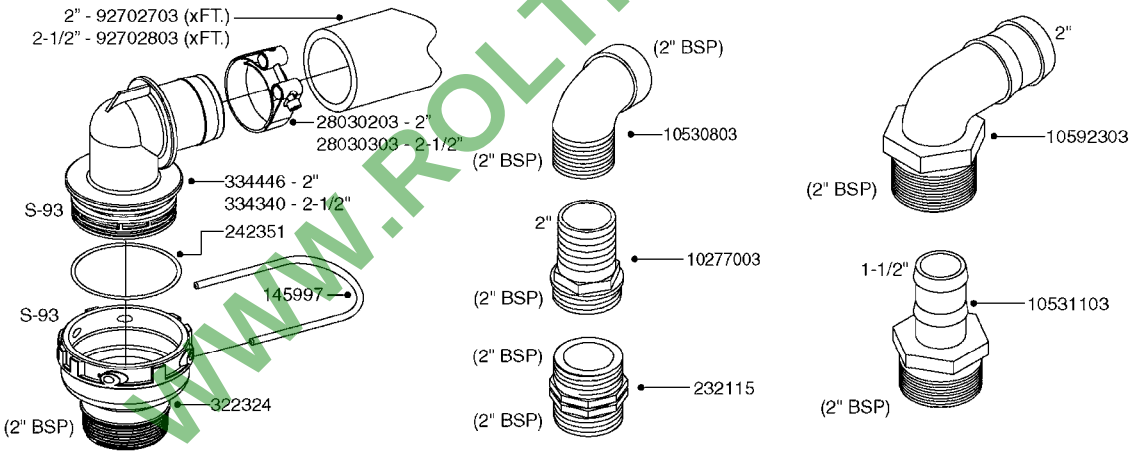

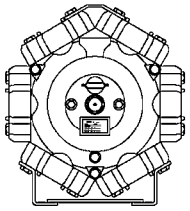

COMPLETE ASSEMBLIES WHOLEGOODS ITEMS

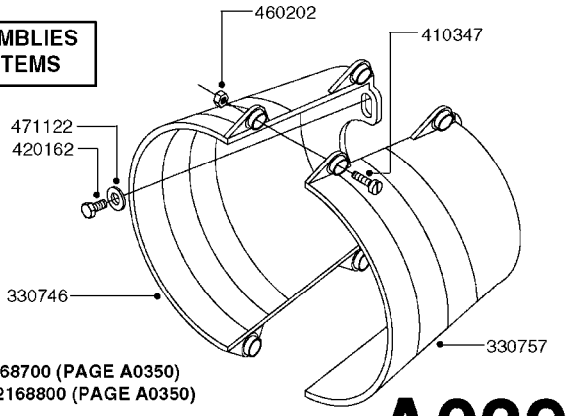

821585 - 463/5.5 W/THROUGH SHAFT (1000 RPM)
821587 - 463/10 W/THROUGH SHAFT (540 RPM)
82169400 - 464/6.5 (1000 RPM H.C. INLINE PORTS)
72293300 - 463/6.5 W/THROUGH SHAFT (1000 RPM)
463/12 (540 RPM H.C. OFFSET PORTS) REPLACED BY 82168700 (PAGE A0350)
463/6.5 (1000 RPM H.C. OFFSET PORTS) REPLACED BY 82168800 (PAGE A0350)

A0390

WWW.ROLTRONIK.PL

parts-nº	order qty	description
145997	1	FITT.DK S-93 FORK
232115	1	FITT HEX NIPPLE 2'-2' BSP
241441	1	O-RING D29.3X3
242020	1	O-RING 39.2 X 3 VITON
242351	1	O-RING D69.5X3.0 VITON F.S-93
242353	1	O-RING D44.2X3.0 VITON F.S-67
320821	1	FITT.DK NUT 1-1/2" BSP
322066	1	FITT.DK S-56 NUT
322322	1	FITT.DK S-67 X 1-1/4"BSP MALE
322323	1	FITT.DK S-93 X 1-1/2"BSP MALE
322324	1	FITT.DK S-93 X 2"BSP MALE
330746	1	GUARD PTO LOWER PART SHORT
330757	1	GUARD PTO UPPER PART SHORT
333292	1	FITT.DK HB 1"O'RING F.1-1/2"
334099	1	FITT.DK S-61 ELB.1-1/2"110 DEG
334150	1	FITT.DK HB 1-1/4" 110 F.1-1/2"
334244	1	FITT.DK S-67 ELB.1-1/4"
334340	1	FITT.DK S-93 ELBOW 2.5"
334446	1	FITT.DK S-93 ELB.2" PVC
334647	1	FITT.DK S93 ELB 1-1/2" 90 PVC
390231	1	FITT.DK NIPPLE 1-1/2 X S56
390232	1	FITT.DK HN 1-1/2' X 1-1/4' BSP
410347	1	SCREW M6X20 8.8
420162	1	BOLT HEX 8.8 DEL 3/8"x15MM
460202	1	NUT HEX M6
461217	1	NUT HEX M5 LOCK
471122	1	WASHER, M10, Ø20/10.5X 2.0, SS
821585	1	PUMP 463/5.5 THRGH SHAFT 1000R
821587	1	PUMP 463/10 THROUGH SHAFT TWNF
10277003	1	FITT.PO.HB 2.00X2.00 MCPHEE
10530803	1	FITT.PO.SE 2.00X2.00 45 DEG.
10531103	1	FITT.PO.HB 2.00"NPT X 1.50"HOS
10592303	1	FITT.PO.HB 2.00X 2.00BSP 90DEG
14012200	1	FITT.DK S-67 FORK W/M5 THREADS
28030103	1	CLAMP HOSE GEAR P5/4-S1.5"6724
28030203	1	CLAMP HOSE T-BOLT S2" 235-67
28030303	1	CLAMP HOSE T-BOLT S2.5" 235-76
72293300	1	PUMP 463/6.5 MED-2-1000-GG
82168700	1	PUMP 464/12/540 OFFSET PORTS
82168800	1	PUMP 464/6.5/1000 OFFSET PORTS
82169400	1	PUMP 464-6.5-STD-2-1000 FK
92702603	1	HOSE PVC SUCT GRAY 1-1/2"
92702703	1	HOSE PVC SUCT GRAY 2"
92702803	1	HOSE PVC SUCT GRAY 2.5"
92734403	1	HOSE R X5/4" X200PSI WP X0012"

WWW.PO-TRONIK.PL

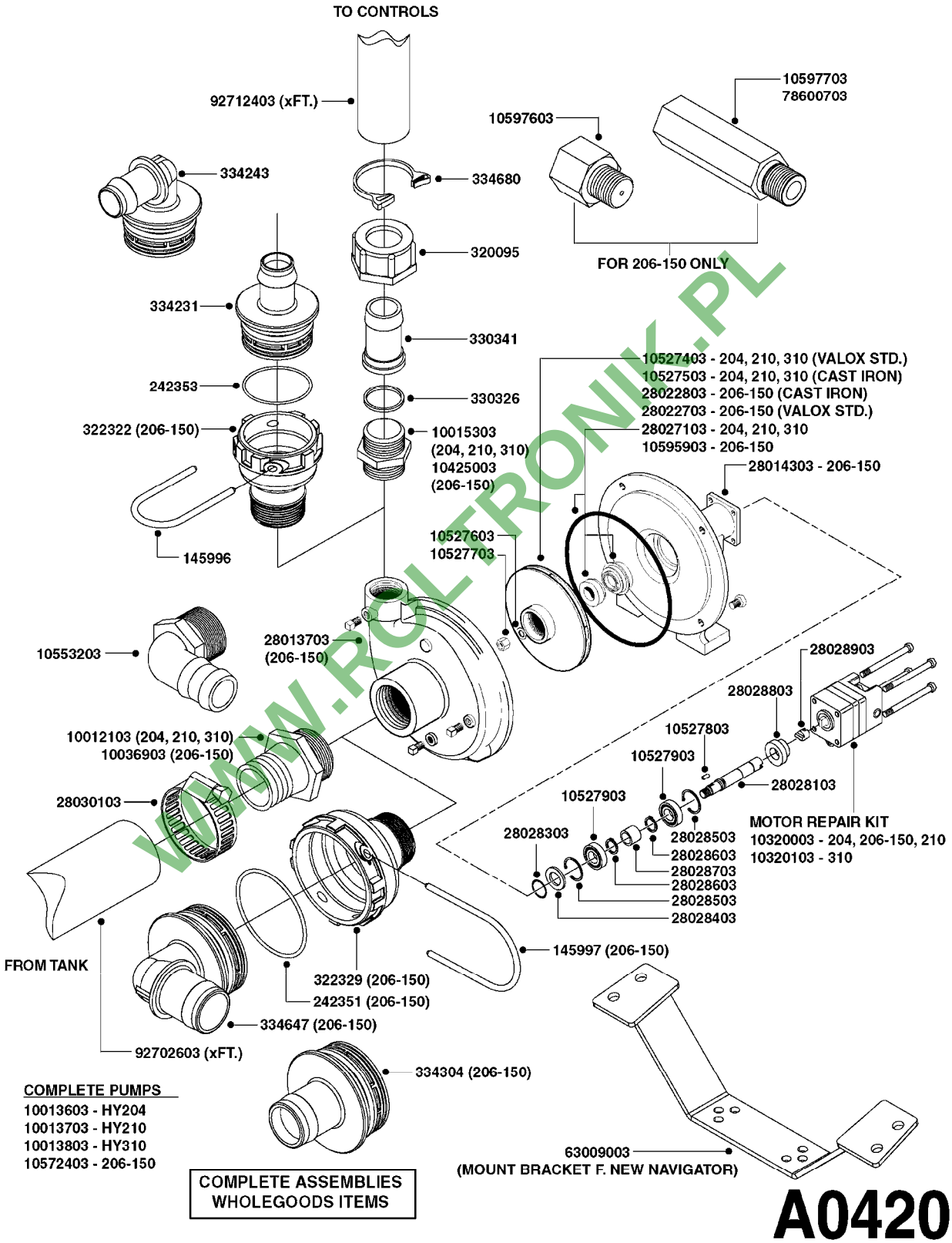

COMPLETE PUMPS

10013603 - HY204
10013703 - HY210
10013803 - HY310
10572403 - 206-150

COMPLETE ASSEMBLIES
WHOLEGOODS ITEMS

A0420

WWW.ROL-TRONIK.PL

parts-nº	order qty	description
145996	1	FITT.DK S-67 FORK
145997	1	FITT.DK S-93 FORK
242351	1	O-RING D69.5X3.0 VITON F.S-93
242353	1	O-RING D44.2X3.0 VITON F.S-67
320095	1	FITT.DK NUT 1" BSP
322322	1	FITT.DK S-67 X 1-1/4"BSP MALE
322329	1	FITT.DK S-93 X 1-1/2"BSP MALE2
330326	1	O-RING D30/D24X2 F.1"NUT
330341	1	FITT.DK HB 1" F. 1" NUT
334231	1	FITT.DK S-67 STR.1'
334243	1	FITT.DK S-67 ELB.1"
334304	1	FITT.DK S-93 STR.1-1/2" PVC
334647	1	FITT.DK S93 ELB 1-1/2" 90 PVC
334680	1	CLAMP HOSE PLASTIC 1"
10012103	1	FITT.PO.HB 1.25X1.50 IMB1012
10013603	1	PUMP ACE HY 204
10013703	1	PUMP ACE HY 210
10013803	1	PUMP ACE HY 310
10015303	1	FITT.PO.HN 1.00X1.00 M1000
10036903	1	FITT.PO.HB 1.50X1.50 IMB1212
10320003	1	MOTOR REPAIRKIT ACE204,206,210
10320103	1	MOTOR REPAIR KIT ACE 304,310
10425003	1	FITT.PO.HN 1.25X1.00 MCPHEE
10527403	1	IMPELLER VALOX F.ACE PUMP
10527503	1	IMPELLER CASTIRON F.ACE PUMP
10527603	1	WASHER 3/8' F.ACE PUMP
10527703	1	NUT HEX NF 3/8 F.ACE PUMP
10527803	1	KEY 1/8x1/8x1/2'F.ACE PUMP
10527903	1	BEARING F.ACE PUMP (#40870)
10553203	1	FITT.PO.EL 1.5X1.5 HB BLACK
10572403	1	PUMP ACE HY 206 SERIES 150
10595903	1	REPAIR KIT ACE 206-150
10597603	1	ORIFACE RESTRICTOR F. ACE 206
10597703	1	FITT, HYD FLOW FUSE ACE 206OLD
28013703	1	PUMP HOUSING FRONT ACE 206-150
28014303	1	PUMP HOUSING W.FEET 206-150
28022703	1	IMPELLER THERMOPLASTIC
28022803	1	IMPELLER CAST IRON
28027103	1	REPAIR KIT ACE 204,210,310
28028103	1	SHAFT 5/8"DIA.1/2"KEYWAY SS
28028303	1	O-RING, SHAFT SEAL
28028403	1	SLINGER
28028503	1	SNAP RING - INTERNAL
28028603	1	SNAP RING - EXTERNAL
28028703	1	SPACER FOR SHAFT
28028803	1	SEAL SUPPORT SPACER 200 SERIES
28028903	1	COUPLING FOR HYDRAULIC MOTOR
28030103	1	CLAMP HOSE GEAR P5/4-S1.5"6724
63009003	1	CENTRIFUGAL PUMP BRACKET
78600703	1	FITT, HYD FLOW FUSE ACE 206N
92702603	1	HOSE PVC SUCT GRAY 1-1/2"
92712403	1	HOSE R X1" X300PSI WP X0012"

WWW.PC-TRONIK.PL

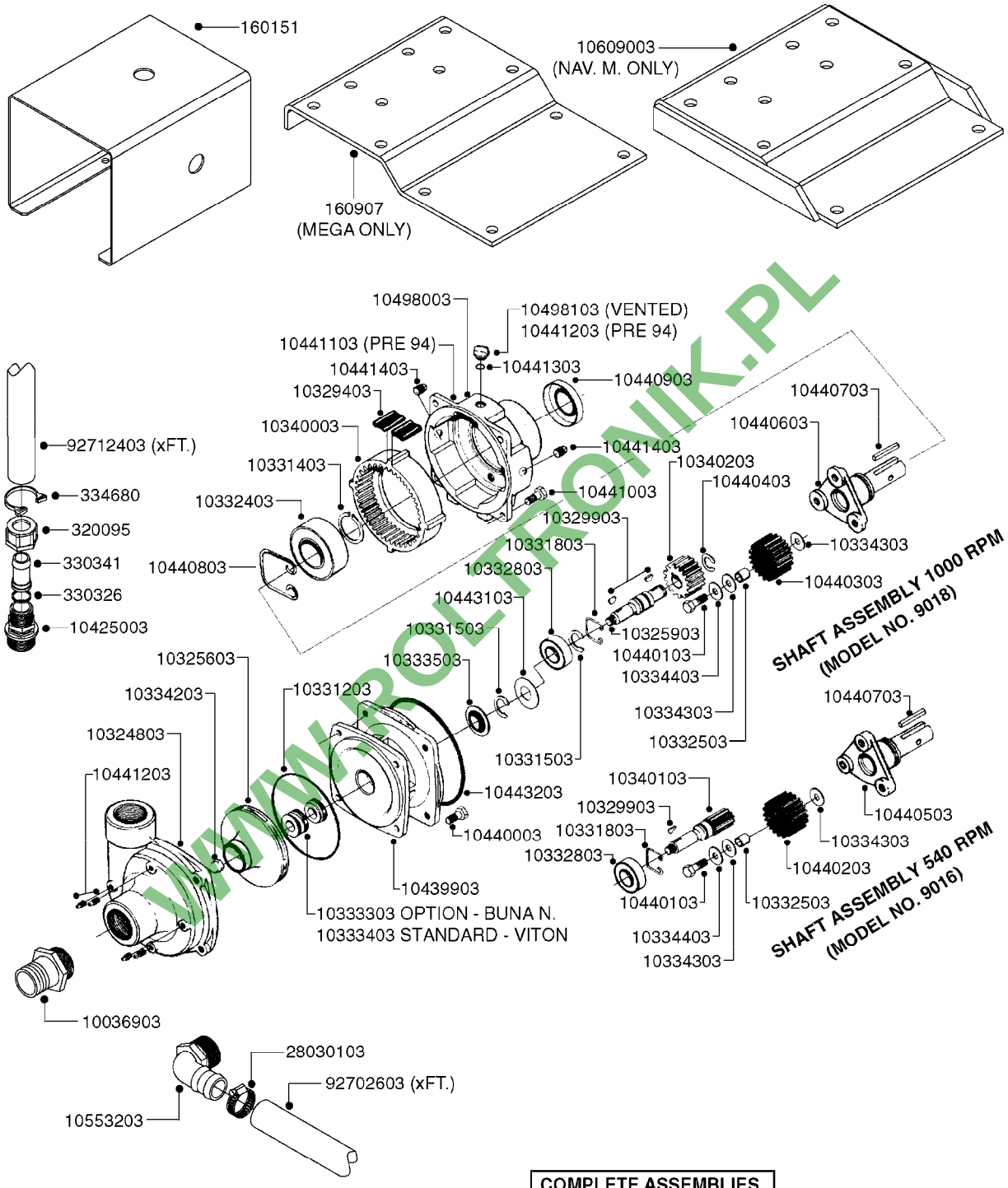

WWW.ROLTRONIK.PL

COMPLETE ASSEMBLIES
WHOLEGOODS ITEMS

COMPLETE PUMPS
10012903 - 9016C 540 RPM
10013103 - 9018C 1000RPM

Gear lube requirement: 6fl. oz. 80W90 Oil

A0470

HARDI	**Agroparts: www.HARDI-INTERNATIONAL.com**	
	PUMP 9016/9018 HYPRO CENT. A0470-HIN, 01:01:16	Page 1 Date 16.03.2016 13:34

parts-n°	order qty	description
10012903	1	PUMP HYPRO C9016 540 RPM 90023
10013103	1	PUMP HYPRO 9018C CENT.1000 RPM
10036903	1	FITT.PO.HB 1.50X1.50 IMB1212
10324803	1	PUMP CASING
10325603	1	IMPELLER NYLON
10325903	1	IMPELLER SHAFT
10329403	1	CUSHION BUMPER
10329903	1	KEY WOODRUFF
10331203	1	O-RING
10331403	1	RING RETAINING
10331503	1	SNAP-RING
10331803	1	RING RETAINING
10332403	1	BEARING BALL
10332503	1	BEARING INNER RACE
10332803	1	BEARING BALL
10333303	1	SEAL KIT F. HYPRO 9016/18 BUNA
10333403	1	SEAL KIT F.HYPRO 9016/18 VITON
10333503	1	BEARING SHIELD & OIL SEAL
10334203	1	NUT HEX CAP HYPRO PUMP
10334303	1	WASHER 32OD X 19ID X 2.5TK PLA
10334403	1	WASHER 32OD X13ID X 1.5
10340003	1	RING GEAR
10340103	1	PINION GEARED IMPELLER SHAFT
10340203	1	SUN GEAR
10425003	1	FITT.PO.HN 1.25X1.00 MCPHEE
10439903	1	MOUNTING FLANGE ADAPTOR
10440003	1	SCREW HEX HEAD CAP
10440103	1	SCREW HEX HEAD CAP
10440203	1	GEAR W BGRS.540 RPM (DRIVER)
10440303	1	GEAR W BGRS. 1000 RPM (DRIVER)
10440403	1	RING RETAINER HYPRO 1K CENT.
10440503	1	DRIVER HUB 540 RPM
10440603	1	DRIVER HUB 1000 RPM
10440703	1	KEY SQ 1/4"x1-1/2"
10440803	1	RING RETAINER
10440903	1	OIL SEAL
10441003	1	SCREW HEX HEAD CAP
10441103	1	GEAR CASING
10441203	1	OIL FILL PLUG
10441303	1	O-RING
10441403	1	OIL PLUG
10443103	1	WASHER SEAL (PAPER)
10443203	1	O-RING
10498003	1	CASTING F.HYPRO 9016/18 (GEAR)
10498103	1	PLUG F.HYPRO GEAR CASTING 9016
10553203	1	FITT.PO.EL 1.5X1.5 HB BLACK
10609003	1	PUMP BASE HYPRO NAV.
160151	1	SHEILD FOR 9016 PUMP ESC
160907	1	MOUNT PLATE F.CENT.PUMP MEGA
28030103	1	CLAMP HOSE GEAR P5/4-S1.5"6724
320095	1	FITT.DK NUT 1" BSP
330326	1	O-RING D30/D24X2 F.1"NUT
330341	1	FITT.DK HB 1" F. 1" NUT
334680	1	CLAMP HOSE PLASTIC 1"
92702603	1	HOSE PVC SUCT GRAY 1-1/2"
92712403	1	HOSE R X1" X300PSI WP X0012"

WWW.ROLTRONIK.PL

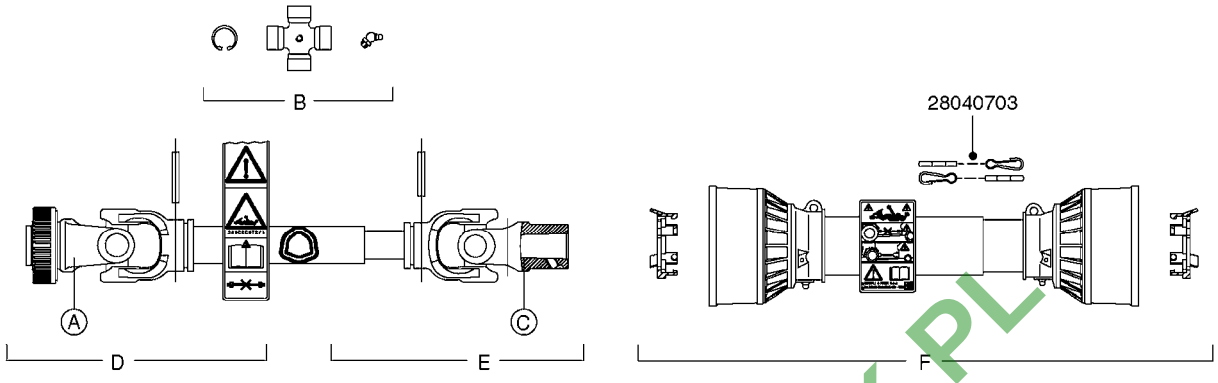

WWW.ROLTRONIK.PL

PTO	TRACTOR	IMPLEMENT	LENGTH	A	B	C	D	E	F
28020203	1-3/4" 20-SPLINE	1-3/8" 21-SPLINE	860/1313	28015703	28009403	28040603	28015803	28015903	28016003
28020303	1-3/8" 21-SPLINE	1-3/8" 21-SPLINE	860/1328	28015103	28015203	28015303	28015403	28015503	28015603
829445	1-3/8" 6-SPLINE	1-3/8" 6-SPLINE	810/1219	284041	289045	289041	28016703	28016803	289050
829446	1-3/8" 6-SPLINE	1-3/8" 6-SPLINE	810/1230	289040	284041	289040	28016203	28016303	289049
829480	1-3/8" 21-SPLINE	1-3/8" 21-SPLINE	1210/1912	28005200	289042	28005800	28006700	28007300	28008100
829482 *	1-3/8" 6-SPLINE	Ø25 CONE 3	610/912	28005400	289042	28006000	28008500	28007500	28008600
829483 *	1-3/8" 6-SPLINE	Ø30 CONE 4	610/912	28005400	289042	28006100	28008500	-	28008600
829484 *	1-3/8" 6-SPLINE	1-3/8" 6-SPLINE	610/912	28005400	289042	28006200	28008500	-	28008600
829486	1-3/8" 6-SPLINE	Ø30 CONE 4	860/1328	28005400	289042	28006100	28006900	-	28008100
829487 *	1-3/8" 6-SPLINE	1-3/8" 6-SPLINE	860/1328	28005400	289042	28006200	28006900	-	28008100
829490	1-3/8" 6-SPLINE	Ø30 CONE 4	1210/1912	28005400	289042	28006100	28006900	-	28008100
829491	1-3/8" 6-SPLINE	Ø1"	610/912	28005400	289042	28006300	28008500	28007800	28008600
829502 *	1-3/8" 6-SPLINE	1-3/8" 6-SPLINE	1210/1912	28068800	28069700	28073000	-	-	28072800

* Supplier changed in 2011 - see page A0580 for “AMA” PTO’s (yellow and black shields).

parts-n°	order qty	description
284041	1	UNIV. JOINT 27x70mm
289040	1	PTO YOKE 1-3/8" X 6 SPLINE
289041	1	PTO YOKE 1-3/8" X 6 SPLINE
289042	1	UNIV. JOINT 22x54mm
289045	1	UNIV. JOINT 30.2x79.4mm
289049	1	PTO SHIELD COMPLETE F.829446
289050	1	PTO SHIELD COMPLETE F.829445
829445	1	PTO 1-3/8/6X1-3/8/6X810M AXIAL
829446	1	PTO SHAFT LE-SPV + LP ZE-P540
829480	1	PTO 1-3/8/21 x 1-3/8/21x1210MM
829482	1	PTO 1-3/8/6X25MM X 600MM 1202
829483	1	PTO 1-3/8/6X30MM x 610MM 1302
829484	1	PTO 1-3/8/6X1-3/8/6X575MM 361
829486	1	PTO 1-3/8/6X30MM X870MM 1302
829487	1	PTO 1-3/8/6X1-3/8/6X870MM 361
829490	1	PTO 1-3/8/6X30MM 1320MM 1302
829491	1	PTO 1-3/8/6X1' 610/913MM 9016
829502	1	PTO 1-3/8/6x1210/1745
28005200	1	PTO YOKE 1-3/8" X 21 SPLINE
28005400	1	PTO YOKE 1-3/8" X 6 SPLINE
28005800	1	PTO YOKE 1-3/8" X 21 SPLINE
28006000	1	PTO YOKE D25 CONE 3 DEG.
28006100	1	PTO YOKE D30 CONE 4 DEG.
28006200	1	PTO YOKE 1-3/8" X 6 SPLINE
28006300	1	PTO YOKE D1"
28006700	1	PTO HALF SHAFT - TRACTOR END
28006900	1	PTO HALF SHAFT - TRACTOR END
28007300	1	PTO INNER D1" (NO SHIELD)
28007500	1	PTO INNER D1" (NO SHIELD)
28007800	1	PTO INNER D1" (NO SHIELD)
28008100	1	PTO SHIELD COMPLETE
28008500	1	PTO HALF SHAFT - TRACTOR END
28008600	1	PTO SHIELD ASSY COMPLETE
28009403	1	UNIV. JOINT 27x74.6mm
28015103	1	PTO YOKE 1-3/8"X21 TWST OLD
28015203	1	UNIV. JOINT 23.8x61.3mm
28015303	1	PTO YOKE 1-3/8"X21 BALL COLLAR
28015403	1	PTO OUTER 1-3/8"X21(NO SHIELD)
28015503	1	PTO INNER 1-3/8"X21(NO SHIELD)
28015603	1	PTO SHIELD COMPLETE F.28020303
28015703	1	PTO YOKE 1-3/4"X20 SPL OUTER
28015803	1	PTO OUTER 1-3/4"X20(NO SHIELD)
28015903	1	PTO INNER 1-3/8"X21(NO SHIELD)
28016003	1	PTO SHIELD COMPLETE F.10465803
28016203	1	PTO OUTER 1-3/8"X6(SHIELDED)
28016303	1	PTO INNER 1-3/8"X6(NO SHIELD)
28016703	1	PTO OUTER 1-3/8"X6(NO SHIELD)
28016803	1	PTO INNER 1-3/8"X6(NO SHIELD)
28020203	1	PTO 1-3/4/20x1-3/8/21 BP L=860
28020303	1	PTO 1-3/8/21 x 1-3/8/21 B&P
28040603	1	PTO YOKE 1-3/8X21SPL BLACK
28040703	1	SAFETY CHAIN F.CV BLACK PTO
28068800	1	PTO YOKE 1-3/8" X 6 SPLINE
28069700	1	UNIV. JOINT STD1 SFT
28072800	1	PTO SHIELD COMPLETE L=1912 SFT
28073000	1	PTO YOKE 1-3/8" X 6 SPLINE

WWW.RO-TRONIK.PL

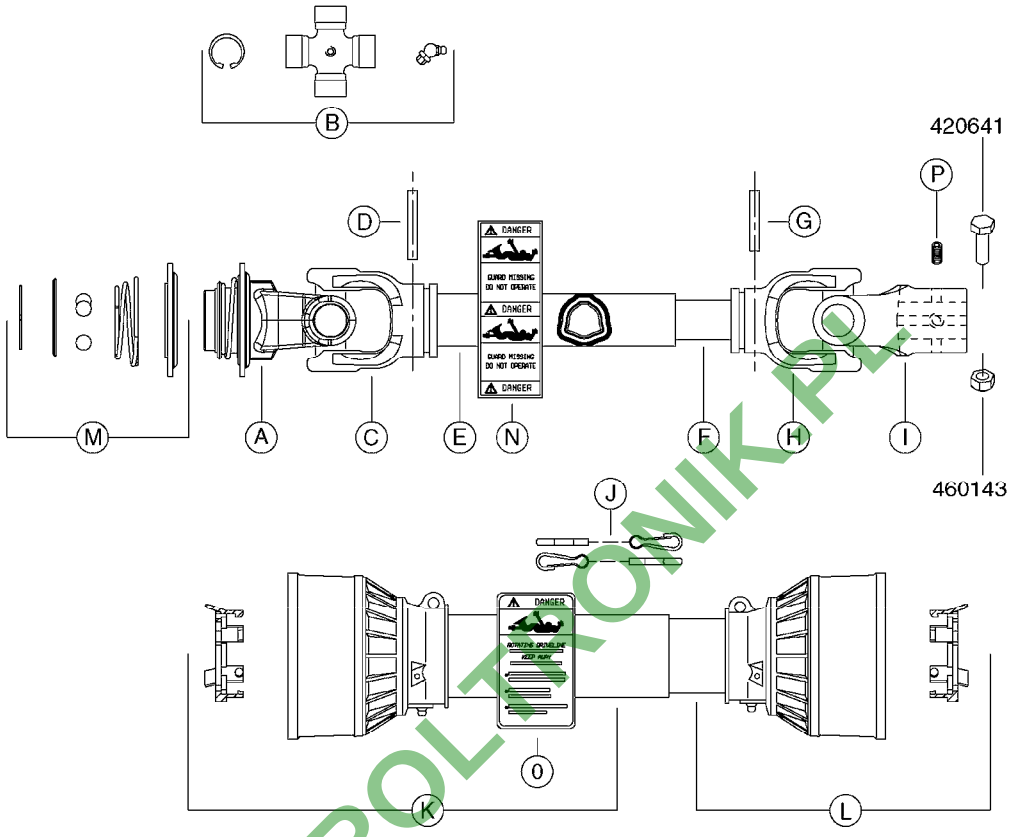

COMPLETE ASSEMBLIES WHOLEGOOD ITEMS

PTO #	28021403	28021503	28021603
TRACTOR	1-3/8" 6 SPLINE	1-3/8" 21 SPLINE	1-3/4" 20 SPLINE
IMPLEMENT	D1"	D1"	D1"
LENGTH	1031/1501	1031/1499	1066/1519
A	28056703	28056803	28056903
B	289042	289042	28040503
C	28057003	28057003	28057103
D	28057203	28057203	28009803
E	28057303	28057303	28057403
F	28057503	28057503	28057603
G	28057703	28057703	28009903
H	28058503	28058503	28010103
I	28057803	28057803	28057903
J	28040703	28040703	28040703
K	28058003	28058003	28058103
L	28058203	28058203	28058303
M	28027903	28027903	28058403
N	28041803	28041803	28041803
O	28041903	28041903	28041903
P	450015	450015	450015

A0520

WWW.ROLTRONIK.PL

PTO SHAFTS - BONDIOLI CENT.
A0520-HIN, 01:01:16

parts-n°	order qty	description
289042	1	UNIV. JOINT 22x54mm
420641	1	BOLT HEX 8.8 DEL M8X35
450015	1	SCREW ALLAN 3/8'X5/8' BLACK
460143	1	NUT HEX M8 LOCK A2 DIN985
28009803	1	PTO PIN TUBE RETAINER OUTER
28009903	1	PTO TUBE RETAINER INNER
28010103	1	PTO YOKE F.INNER TUBE CV PTO
28021403	1	PTO 1"STR/1-3/8" 6SPL B&P
28021503	1	PTO 1"STR/1-3/8" 21SPL B&P
28021603	1	PTO 1"STR/1-3/4" 20SPL B&P
28027903	1	PTO BALL LOCK.KIT F.1-3/8 YOKE
28040503	1	UNIV. JOINT 27x74.6mm
28040703	1	SAFETY CHAIN F.CV BLACK PTO
28041803	1	DECAL DANGER GUARD MISSING
28041903	1	DECAL DANGER ROT.DRIVELINE
28056703	1	PTO YOKE #1 1-3/8" X 6 SPLINE
28056803	1	PTO YOKE #1 1-3/8" X 21 SPLINE
28056903	1	PTO YOKE #4 1-3/8" X 20 SPLINE
28057003	1	PTO TUBE YOKE #1-G1 OUTER
28057103	1	PTO TUBE YOKE #4-G4 OUTER
28057203	1	PTO PIN TUBE RETAINER OUTER
28057303	1	PTO TUBE OUTER #1 745MM
28057403	1	PTO TUBE OUTER #4 720MM
28057503	1	PTO TUBE INNER #1 745MM
28057603	1	PTO TUBE INNER #4 720MM
28057703	1	PTO TUBE RETAINER INNER
28057803	1	PTO TUBE YOKE #1 Ø=1"
28057903	1	PTO TUBE YOKE #4 Ø=1"
28058003	1	PTO HALF SAFETY SHIELD OUTER
28058103	1	PTO HALF SAFETY SHIELD OUTER
28058203	1	PTO HALF SAFETY SHIELD INNER
28058303	1	PTO HALF SAFETY SHIELD INNER
28058403	1	PTO BALL LOCK.KIT F.1-3/4 YOKE
28058503	1	PTO TUBE YOKE #1-G1 INNER

WWW.POLTRONIK.PL

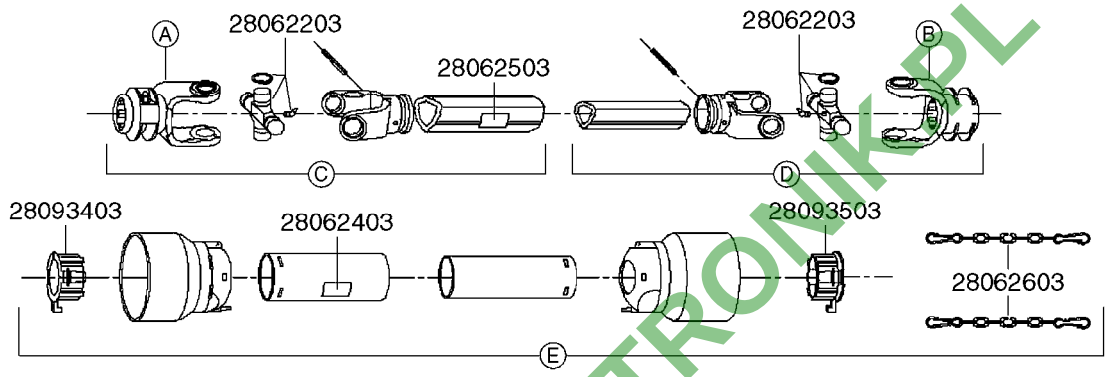

PTO #	829482	829483	829484	829487
TRACTOR	1-3/8" 6 SPLINE	1-3/8" 6 SPLINE	1-3/8" 6 SPLINE	1-3/8" 6 SPLINE
IMPLEMENT	25 mm	30 mm	1-3/8" 6 SPLINE	1-3/8" 6 SPLINE
LENGTH	610/800	610/800	610/800	860/1050
A	28062103	28062103	28062103	28062103
B	28062303	28063003	28062103	28062103
C	28062703	28062703	28062703	28063403
D	28062803	28063103	28063203	28063503
E	28062903	28062903	28062903	28063303

Note: For "Bondioli" PTO's (previous supplier) - see page A0510.

COMPLETE ASSEMBLIES
WHOLEGOOD ITEMS

A0580

WWW.ROLTRONIK.PL

parts-n°	order qty	description
829482	1	PTO 1-3/8/6X25MM X 600MM 1202
829483	1	PTO 1-3/8/6X30MM x 610MM 1302
829484	1	PTO 1-3/8/6X1-3/8/6X575MM 361
829487	1	PTO 1-3/8/6X1-3/8/6X870MM 361
28062103	1	PTO YOKE 1-3/8X6 AMA
28062203	1	UNIV.JOINT CAT.1 AMA
28062303	1	PTO YOKE D25 AMA
28062403	1	DECAL - DANGER ROTATING SHAFT
28062503	1	DECAL - DANGER MISSING GUARD
28062603	1	SAFETY CHAIN F.PTO AMA
28062703	1	PTO OUTER 1-3/8X6 (NO SHIELD)
28062803	1	PTO INNER D25 (NO SHIELD)
28062903	1	PTO SHIELD COMPLETE
28063003	1	PTO YOKE D30 AMA
28063103	1	PTO INNER D30 (NO SHIELD)
28063203	1	PTO INNER 1-3/8X6 (NO SHIELD)
28063303	1	PTO SHIELD COMPLETE
28063403	1	PTO OUTER 1-3/8X6 (NO SHIELD)
28063503	1	PTO INNER 1-3/8X6 (NO SHIELD)
28093403	1	PTO OUTER TUBE BEARING AMA
28093503	1	PTO INNER TUBE BEARING AMA

WWW.ROLTRONIK.PL

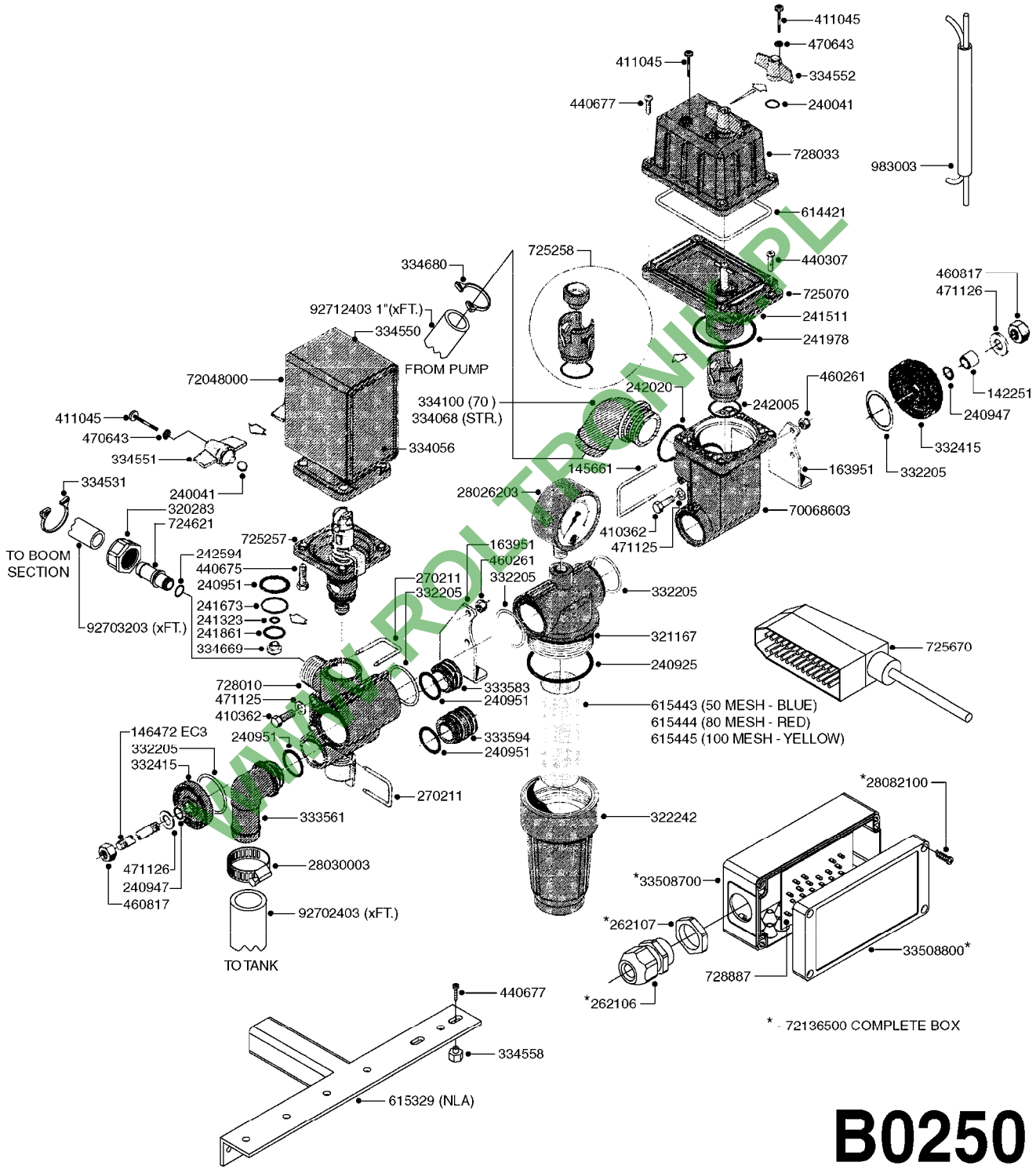

B0250

WWW.ROLTRONIK.PL

parts-n°	order qty	description
142251	1	BUSHING FOR LID
145661	1	FITT.DK S-61 FORK
146472	1	STUD BOLT M8X420
163951	1	MOUNT BRACKET FOR BK180 SECTIO
240041	1	O-RING D15,1/10,3 X 2,4
240925	1	O-RING D49.5X3 NITRIL
240947	1	O-RING D7.3X2.4 NITRIL
240951	1	O-RING D21.2X3 NITRIL
241323	1	O-RING D5.3X2.4 NITRIL
241511	1	O-RING D18X2
241673	1	O-RING D22.1X1.6
241861	1	O-RING D15.3X2.4 VITON
241978	1	O-RING 64.5X3.0
242005	1	O-RING D32.1X1.6 NITRIL
242020	1	O-RING 39.2 X 3 VITON
242594	1	O-RING D14 X 1.78 SCH.70-EPDM
262106	1	BULKHEAD F. CABLE 6.5-14 BLACK
262107	1	NUT F. BULKHEAD CABLE BLACK
270211	1	FITT.DK S25 FORK L=37.5
320283	1	FITT.DK NUT 3/4"BSP
321167	1	FILTER HOUSE S 63 X 4
322242	1	FILTER BOWL / IN-LINE
332205	1	O-RING D43/39XD2
332415	1	COVER
333561	1	FITT.DK ELB.1" EC RETURN
333583	1	END PIECE FOR BYPASS
333594	1	CONNECTING PIECE F. BYPASS
334056	1	COVER F/MOTOR HOUSE EC DIST.
334068	1	FITT.DK S-61 STR 1"
334100	1	FITT.DK S-61 ELB.1" 110 DEG.
334531	1	CLAMP HOSE PLASTIC 3/4"
334550	1	MOTOR HOUSE SECT VALVE
334551	1	GRIP F.MAN.OP.EC ON/OFF GREEN
334552	1	GRIP F.MAN.OP.EC PRES.REG.GREE
334558	1	NUT HEX PLASTIC INSERT
334669	1	VALVE CONE D14/D7-SH 63 WHITE
334680	1	CLAMP HOSE PLASTIC 1"
410362	1	BOLT HEX 8.8 SS M6X20 FT
411045	1	SCREW M4 X 16MM STAINLESS
440307	1	SCREW SHEET-METAL 3/4" NO. 10
440675	1	SCREW F. PLASTIC 5X16 SS
440677	1	SCREW F. PLASTIC 5X20 SS
460261	1	NUT HEX M6X1 LOCK A2 DIN985
460817	1	NUT HEX M8 STAINLESS DIN 934
470643	1	WASHER LOCK
471125	1	WASHER, M6, Ø12/ 6.4X 1.6, SS
471126	1	WASHER, M8, Ø16/ 8.4X 1.6, SS
614421	1	GASKET F/MOTOR HOUSE-ON/OFF TR
615329	1	BRACKET F.ESC CONTROL VALVES
615443	1	FILTER ELEM.50 MESH BLUE
615444	1	FILTER ELEM.80 MESH RED
615445	1	FILTER ELEM.100 MESH YELLOW
724621	1	FITT.DK HB 3/4"ASSY F.3/4" NUT
725070	1	BRKT.PLATE F/PRES. 70068303
725257	1	SPINDLE SECT. F/EC DISTRIBUTOR
725258	1	REG. KIT OLD PRE 1992
725670	1	CABLE 6000MM EC-3
728010	1	DISTRIB HOUSING W/CONST PR GRN
728033	1	MOTOR UNIT F.PRES.REG.EC GREEN
728887	1	CIRCUIT BOARD EC CONTROL
983003	1	CABLE ELEC.2X1MM WIRE BLACK EC

WWW.ROLTRONIK.PL

parts-n°	order qty	description
28026203	1	GAUGE 200PSI/BR,2.5"1/4BSP-BTM
28030003	1	CLAMP HOSE GEAR P1" 6716
28082100	1	SCREW F. BOX LID 1/4" L=20
33508700	1	BOX BOTTOM 160X80X40 BLACK 1-HOLE
33508800	1	LID 160X80X15 BLK W/SCREWS
70068603	1	REGULATOR HOUSING UPDATE PRE92
72048000	1	MOTOR, DISTRIBUTION 1:300
72136500	1	UNIV. CONNECTION BOX F. EC
92702403	1	HOSE PVC SUCT GRAY 1"
92703203	1	HOSE R X3/4" X300PSI WP X0012"
92712403	1	HOSE R X1" X300PSI WP X0012"

WWW.ROLTRONIK.PL

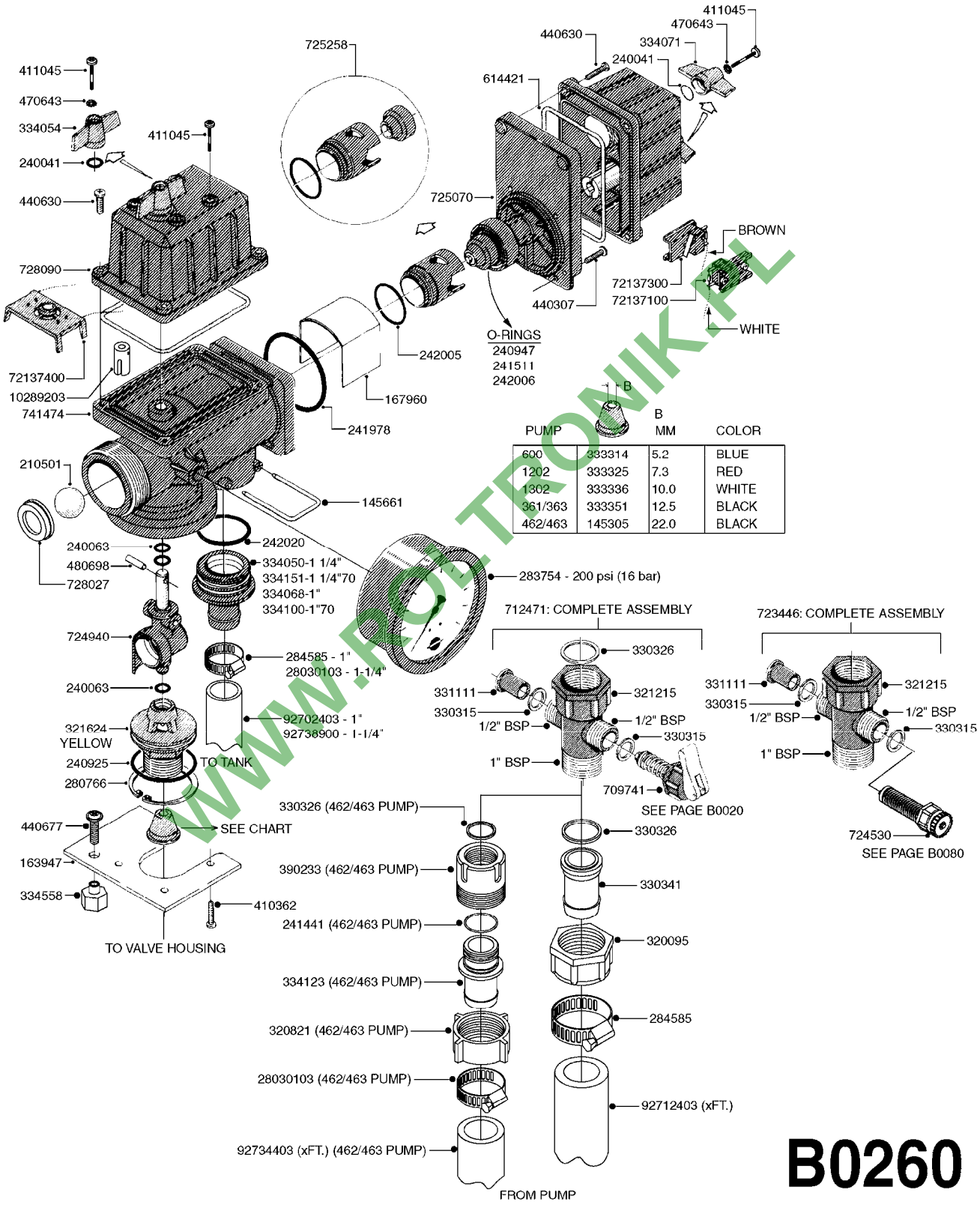

WWW.ROLTRONIK.PL

parts-nº	order qty	description
145305	1	NOZZLE F.OP.UNIT PUMP 462
145661	1	FITT.DK S-61 FORK
163947	1	FITTING FOR BK 180
167960	1	WEAR SHIELD EC CONTROL
210501	1	BALL PLASTIC D25
240041	1	O-RING D15,1/10,3 X 2,4
240063	1	O-RING D14.1/9.3 X 2.4
240925	1	O-RING D49.5X3 NITRIL
240947	1	O-RING D7.3X2.4 NITRIL
241441	1	O-RING D29.3X3
241511	1	O-RING D18X2
241978	1	O-RING 64.5X3.0
242005	1	O-RING D32.1X1.6 NITRIL
242006	1	O-RING D22/D19 X 1.5
242020	1	O-RING 39.2 X 3 VITON
280766	1	SNAP-RING INNER 55X2 DIN 472
283754	1	GAUGE 2.5'BR REAR PSI200 BAR16
284585	1	CLAMP HOSE GEAR 1" MINI 020
320095	1	FITT.DK NUT 1" BSP
320821	1	FITT.DK NUT 1-1/2" BSP
321215	1	FITT.DK HOUSING F. AGITATION
321624	1	BOTTOM PIECE F.BALL OPER.UNIT
330315	1	O-RING D18.4/D13X.6
330326	1	O-RING D30/D24X2 F.1"NUT
330341	1	FITT.DK HB 1" F. 1" NUT
331111	1	VALVE SEAT FOR 1/2" DISTRIBUT.
333314	1	NOZZ.RESTRICTOR 600 BLUE
333325	1	NOZZ.RESTRICTOR 1202 RED
333336	1	NOZZ.RESTRICTOR 1302 WHITE
333351	1	NOZZ.RESTRICTOR 361 BLACK
334050	1	FITT.DK S-61 STR.1-1/4"
334054	1	GRIP F.MAN.OP.EC ON/OFF RED
334068	1	FITT.DK S-61 STR.1"
334071	1	GRIP F.MAN.OP.EC PRESS.REG.RED
334100	1	FITT.DK S-61 ELB.1" 110 DEG.
334123	1	FITT.DK HB 1-1/4"O-RNG F.1-1/2
334151	1	FITT.DK S-61 ELB.1-1/4"110 DEG
334558	1	NUT HEX PLASTIC INSERT
390233	1	FITT.DK REDUC 1-1/2" X 1" BSP
410362	1	BOLT HEX 8.8 SS M6X20 FT
411045	1	SCREW M4 X 16MM STAINLESS
440307	1	SCREW SHEET-METAL 3/4" NO. 10
440630	1	SCREW 1"PLATED
440677	1	SCREW F. PLASTIC 5X20 SS
470643	1	WASHER LOCK
480698	1	PIN M5X16 SLOTTED
614421	1	GASKET F/MOTOR HOUSE-ON/OFF TR
709741	1	VALVE ASSY. 1/2" FLIP LEVER
712471	1	AGITATION VALVE ASSY. ON/OFF
723446	1	AGITATION VALVE ASSY. ADJUST.
724530	1	THUMB WHEEL FOR AGITATION
724940	1	BALL HOUSE MOUNTED - EC
725011	1	MOTOR UNIT F.PRES.REG.EC RED
725070	1	BRKT.PLATE F/PRES. 70068303
725258	1	REG. KIT OLD PRE 1992
728027	1	BUSHING WITH SEAT
728090	1	MOTOR UNIT F.ON/OFF EC GREEN
741474	1	OP.UNIT ON/OF/REG KIT W/322136
10289203	1	COUPLER FOR EC ELEC.CONTROL
28030103	1	CLAMP HOSE GEAR P5/4-S1.5"6724
72137100	1	MCROSWCH ASSY F.PRSR REG WHT W

WWW.RC-TRONIK.PL

parts-n°	order qty	description
72137300	1	MCROSWCH ASSY F.PRSR REG BRN W
72137400	1	MCROSWCH ASSY F. ON/OFF VLV
92702403	1	HOSE PVC SUCT GRAY 1"
92712403	1	HOSE R X1" X300PSI WP X0012"
92734403	1	HOSE R X5/4" X200PSI WP X0012"
92738900	1	HOSE R X PVC X 1-1/4" 0012"

WWW.ROLTRONIK.PL

EC MASTER VALVE-ELEC.(GRN GRP)
B0270-HIN, 01:01:16

Page 0

Date 16.03.2016 13:34

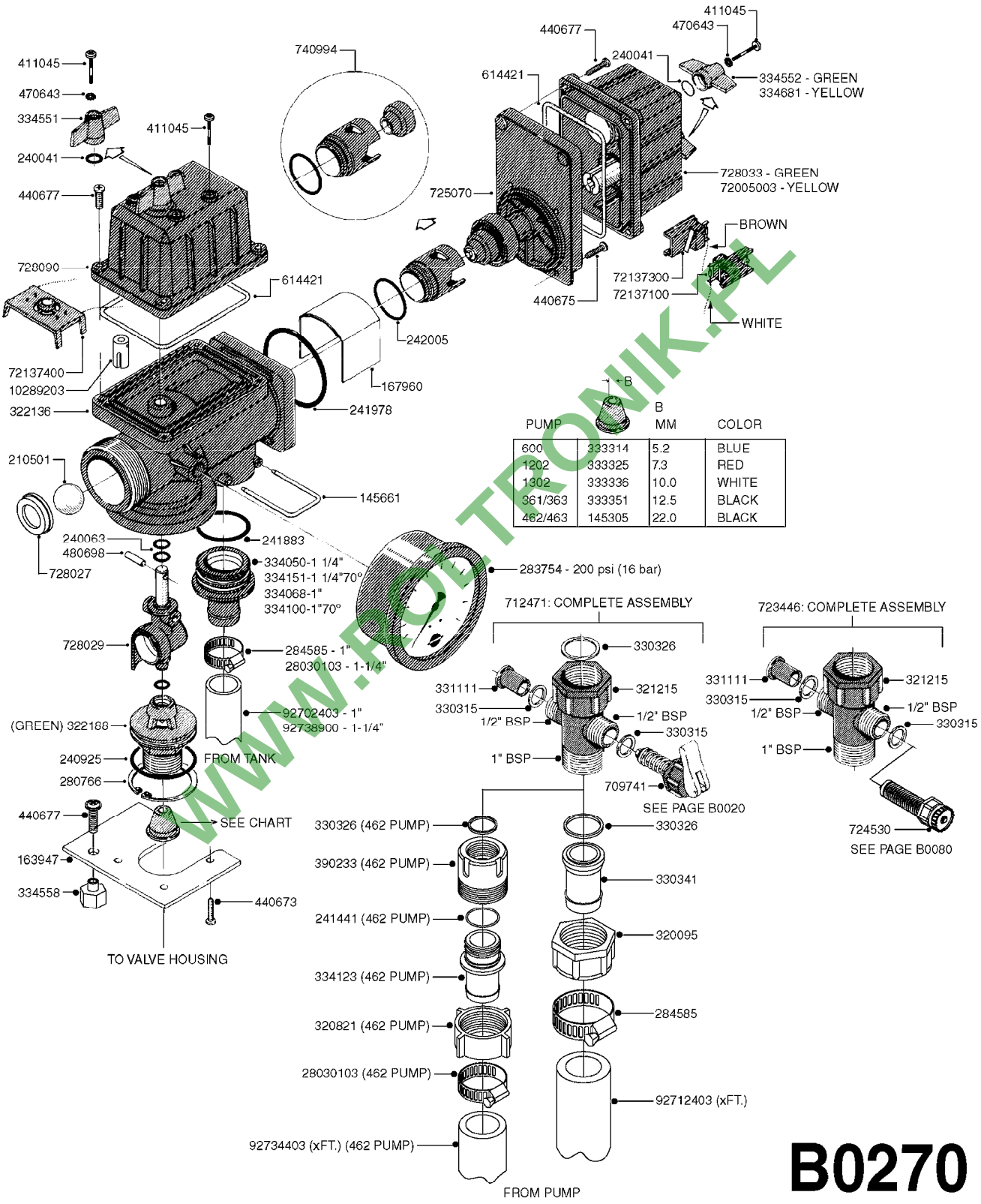

WWW.RODTRONIK.PL

B0270

parts-n°	order qty	description
145305	1	NOZZLE F.OP.UNIT PUMP 462
145661	1	FITT.DK S-61 FORK
163947	1	FITTING FOR BK 180
167960	1	WEAR SHIELD EC CONTROL
210501	1	BALL PLASTIC D25
240041	1	O-RING D15,1/10,3 X 2,4
240063	1	O-RING D14.1/9.3 X 2.4
240925	1	O-RING D49.5X3 NITRIL
241441	1	O-RING D29.3X3
241883	1	O-RING D39.2X3 NITRIL 242020
241978	1	O-RING 64.5X3.0
242005	1	O-RING D32.1X1.6 NITRIL
280766	1	SNAP-RING INNER 55X2 DIN 472
283754	1	GAUGE 2.5'BR REAR PSI200 BAR16
284585	1	CLAMP HOSE GEAR 1" MINI 020
320095	1	FITT.DK NUT 1" BSP
320821	1	FITT.DK NUT 1-1/2" BSP
321215	1	FITT.DK HOUSING F. AGITATION
322136	1	HOUSING F.OPERATING UNIT EC
322188	1	BOTTOM PIECE F.BALL EC
330315	1	O-RING D18.4/D13X.6
330326	1	O-RING D30/D24X2 F.1"NUT
330341	1	FITT.DK HB 1" F. 1" NUT
331111	1	VALVE SEAT FOR 1/2" DISTRIBUT.
333314	1	NOZZ.RESTRICTOR 600 BLUE
333325	1	NOZZ.RESTRICTOR 1202 RED
333336	1	NOZZ.RESTRICTOR 1302 WHITE
333351	1	NOZZ.RESTRICTOR 361 BLACK
334050	1	FITT.DK S-61 STR.1-1/4"
334068	1	FITT.DK S-61 STR.1"
334100	1	FITT.DK S-61 ELB.1" 110 DEG.
334123	1	FITT.DK HB 1 1/4"O-RNG F.1-1/2
334151	1	FITT.DK S-61 ELB.1-1/4"110 DEG
334551	1	GRIP F.MAN.OP.EC ON/OFF GREEN
334552	1	GRIP F.MAN.OP.EC PRES.REG.GREE
334558	1	NUT HEX PLASTIC INSERT
334681	1	GRIP F.MAN.OP.EC PRES.REG.YELL
390233	1	FITT.DK REDUC 1-1/2" X 1" BSP
411045	1	SCREW M4 X 16MM STAINLESS
440673	1	SCREW F.PLASTIC 5X12 SS
440675	1	SCREW F. PLASTIC 5X16 SS
440677	1	SCREW F. PLASTIC 5X20 SS
470643	1	WASHER LOCK
480698	1	PIN M5X16 SLOTTED
614421	1	GASKET F/MOTOR HOUSE-ON/OFF TR
709741	1	VALVE ASSY. 1/2" FLIP LEVER
712471	1	AGITATION VALVE ASSY. ON/OFF
723446	1	AGITATION VALVE ASSY. ADJUST.
724530	1	THUMB WHEEL FOR AGITATION
725070	1	BRKT.PLATE F/PRES. 70068303
728027	1	BUSHING WITH SEAT
728029	1	HOUSING F.BALL MOUNT EC
728033	1	MOTOR UNIT F.PRES.REG.EC GREEN
728090	1	MOTOR UNIT F.ON/OFF EC GREEN
740994	1	PRESS REG.CONE&CYL. STD RATE
10289203	1	COUPLER FOR EC ELEC.CONTROL
28030103	1	CLAMP HOSE GEAR P5/4-S1.5"6724
72005003	1	REGULATOR MOTOR SUBST.
72137100	1	MCROSWCH ASSY F.PRSR REG WHT W
72137300	1	MCROSWCH ASSY F.PRSR REG BRN W
72137400	1	MCROSWCH ASSY F. ON/OFF VLV

WWW.PO-TRONIK.PL

parts-n°	order qty	description
92702403	1	HOSE PVC SUCT GRAY 1"
92712403	1	HOSE R X1" X300PSI WP X0012"
92734403	1	HOSE R X5/4" X200PSI WP X0012"
92738900	1	HOSE R X PVC X 1-1/4" 0012"

WWW.ROLTRONIK.PL

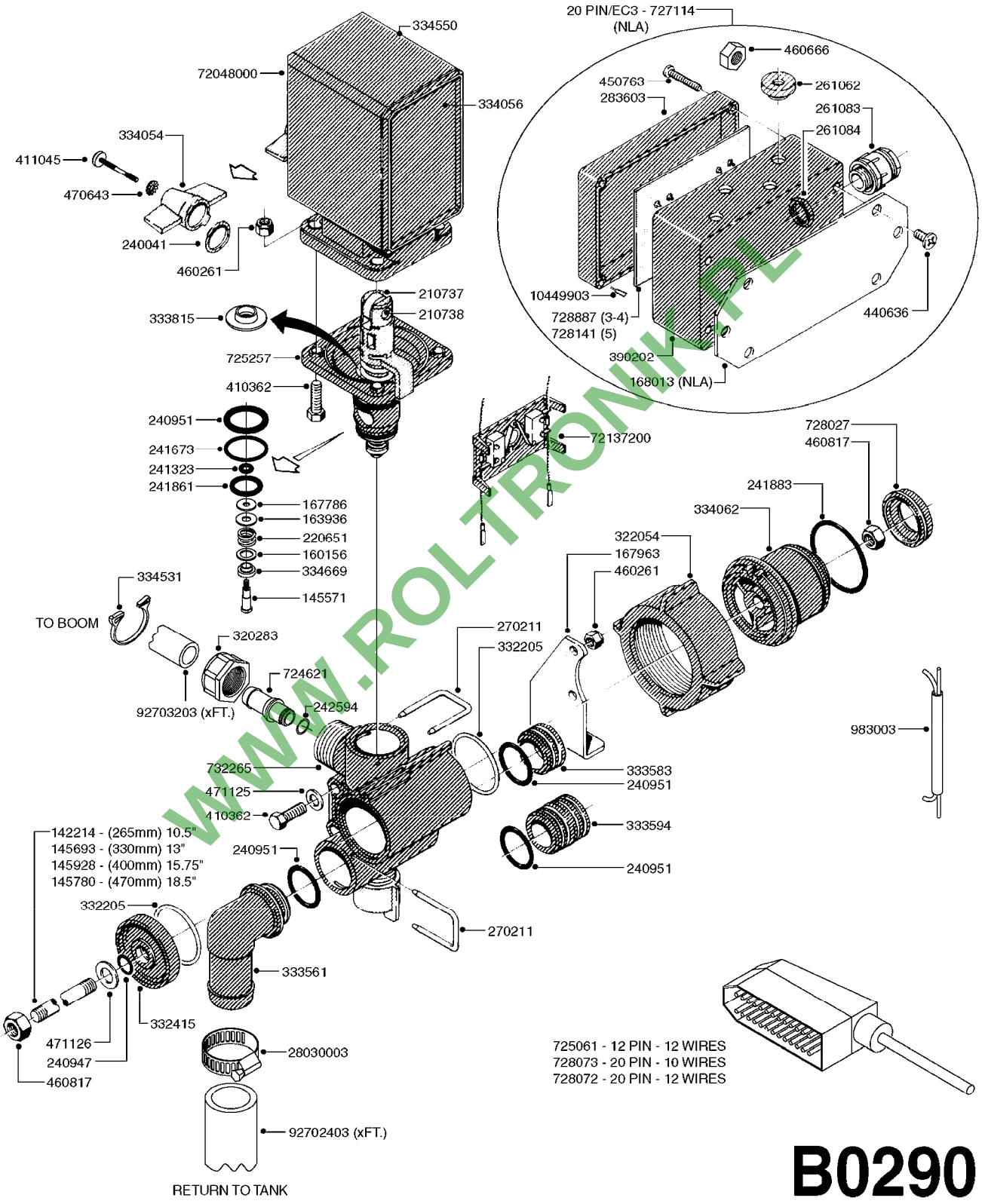

WWW.ROLTRONIK.PL

B0290

parts-nº	order qty	description
142214	1	STUD BOLT - M8X265, 3 SECTION
145571	1	STUD BOLT F/PNEUM. DISTRIBUTOR
145693	1	STUD BOLT - M8X330, 4 SECTION
145780	1	STUD BOLT - M8X470, 6 SECTION
145928	1	STUD BOLT - M8X400, 5 SECTION
160156	1	WASHER D14.1/D9.2X1 SS
163936	1	WASHER D15/D6.2X1
167786	1	WASHER D13/D4.2X1
167963	1	MOUNT BKT.F.EC BOOM SEC.
168013	1	MOUNT BRKT F.CONNECT BOX-NLA
210737	1	BEARING BALL D7 RSTO 5 TN
210738	1	BEARING ROLLER D7 L=16 SS
220651	1	SPRING PRESSURE D12.5/5
240041	1	O-RING D15,1/10,3 X 2,4
240947	1	O-RING D7.3X2.4 NITRIL
240951	1	O-RING D21.2X3 NITRIL
241323	1	O-RING D5.3X2.4 NITRIL
241673	1	O-RING D22.1X1.6
241861	1	O-RING D15.3X2.4 VITON
241883	1	O-RING D39.2X3 NITRIL 242020
242594	1	O-RING D14 X 1.78 SCH.70-EPDM
261062	1	GROMMET
261083	1	GROMMET (PLASTIC)F.ELEC.CABLE
261084	1	NUT F.261083 GROMMET
270211	1	FITT.DK S25 FORK L=37.5
283603	1	LID F. SQ.BOX 120X80X15 MM
320283	1	FITT.DK NUT 3/4"BSP
322054	1	UNION NUT BLACK S61 x 2
332205	1	O-RING D43/39XD2
332415	1	COVER
333561	1	FITT.DK ELB.1" EC RETURN
333583	1	END PIECE FOR BYPASS
333594	1	CONNECTING PIECE F. BYPASS
333815	1	DISTANCE RING
334054	1	GRIP F.MAN.OP.EC ON/OFF RED
334056	1	COVER F/MOTOR HOUSE EC DIST.
334062	1	CONNECT. BRANCH F/EC OP. UNIT
334531	1	CLAMP HOSE PLASTIC 3/4"
334550	1	MOTOR HOUSE SECT VALVE
334669	1	VALVE CONE D14/D7-SH 63 WHITE
390202	1	CONN.BOX EC OPER.UNIT
410362	1	BOLT HEX 8.8 SS M6X20 FT
411045	1	SCREW M4 X 16MM STAINLESS
440636	1	SCREW SHEET-METAL 1/2" NO 12
450763	1	SCREW M4X25
460261	1	NUT HEX M6X1 LOCK A2 DIN985
460666	1	NUT HEX M4
460817	1	NUT HEX M8 STAINLESS DIN 934
470643	1	WASHER LOCK
471125	1	WASHER, M6, Ø12/ 6.4X 1.6, SS
471126	1	WASHER, M8, Ø16/ 8.4X 1.6, SS
724621	1	FITT.DK HB 3/4"ASSY F.3/4" NUT
725061	1	CABLE - EC 12WIRE L=6000mm
725257	1	SPINDLE SECT. F/EC DISTRIBUTOR
727114	1	CONNECTOR BOX WITH CABLE
728027	1	BUSHING WITH SEAT
728072	1	CABLE,20-PIN,6M EC/4
728073	1	CABLE,20-PIN,6M, EC/3
728141	1	CIRCUIT BOARD F.EC7 CONN. BOX
728887	1	CIRCUIT BOARD EC CONTROL
732265	1	DISTRIB HOUSING W/CONST PR RED

WWW.BOLTRONIK.PL

parts-n°	order qty	description
983003	1	CABLE ELEC.2X1MM WIRE BLACK EC
10449903	1	ELEC.CONNECTOR FOR EC JUNC.BOX
28030003	1	CLAMP HOSE GEAR P1" 6716
72048000	1	MOTOR, DISTRIBUTION 1:300
72137200	1	MCROSWCH ASSY F.BOOM VLV 300:1
92702403	1	HOSE PVC SUCT GRAY 1"
92703203	1	HOSE R X3/4" X300PSI WP X0012"

WWW.ROLTRONIK.PL

EC BOOM VALVE-ELEC.(GRN GRIP)
B0300-HIN, 01:01:16

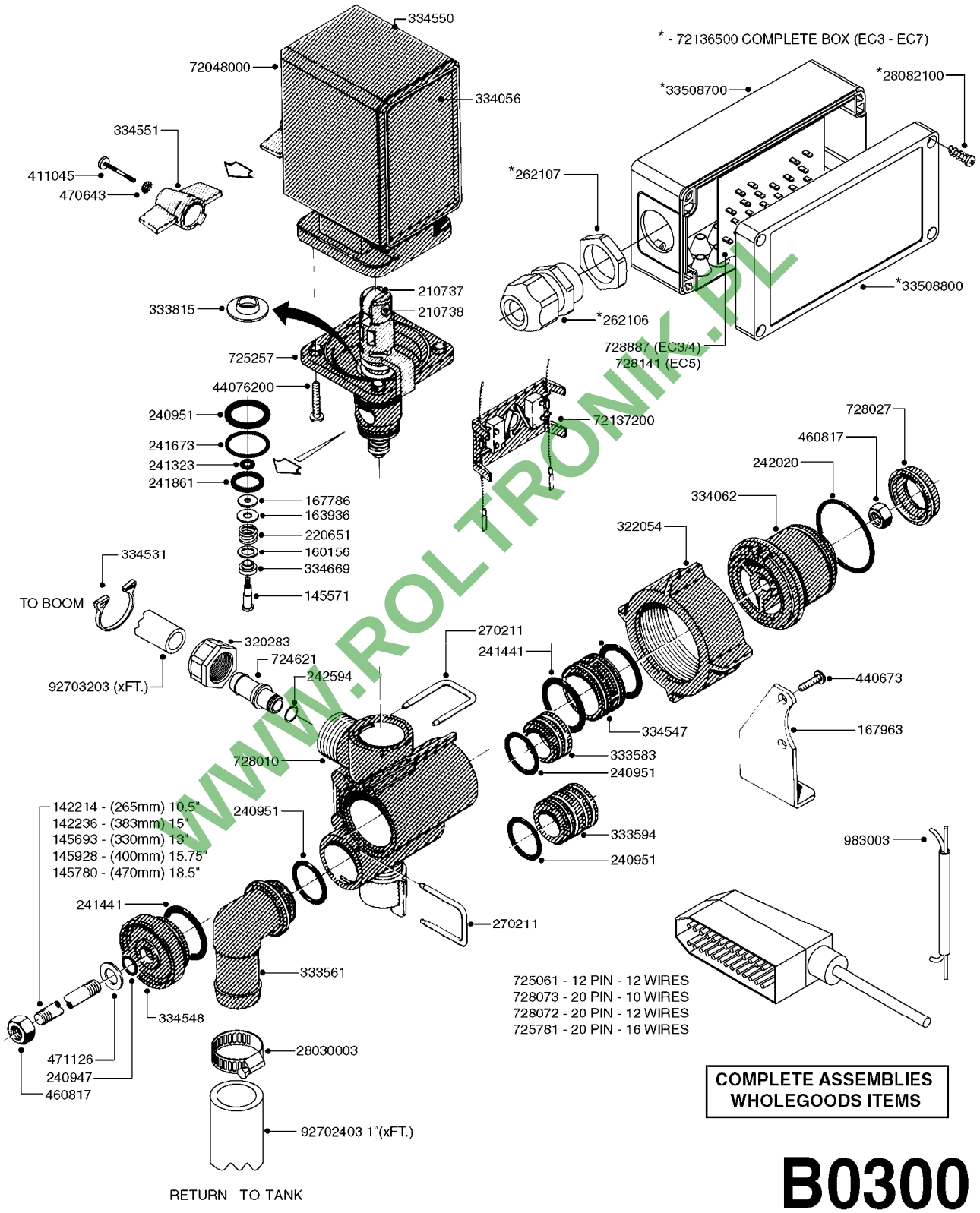

WWW.ROLTRONIK.PL

parts-nº	order qty	description
142214	1	STUD BOLT - M8X265, 3 SECTION
142236	1	STUD BOLT 8 X 381 - 8 MODULS
145571	1	STUD BOLT F/PNEUM. DISTRIBUTOR
145693	1	STUD BOLT - M8X330, 4 SECTION
145780	1	STUD BOLT - M8X470, 6 SECTION
145928	1	STUD BOLT - M8X400, 5 SECTION
160156	1	WASHER D14.1/D9.2X1 SS
163936	1	WASHER D15/D6.2X1
167786	1	WASHER D13/D4.2X1
167963	1	MOUNT BKT.F.EC BOOM SEC.
210737	1	BEARING BALL D7 RSTO 5 TN
210738	1	BEARING ROLLER D7 L=16 SS
220651	1	SPRING PRESSURE D12.5/5
240947	1	O-RING D7.3X2.4 NITRIL
240951	1	O-RING D21.2X3 NITRIL
241323	1	O-RING D5.3X2.4 NITRIL
241441	1	O-RING D29.3X3
241673	1	O-RING D22.1X1.6
241861	1	O-RING D15.3X2.4 VITON
242020	1	O-RING 39.2 X 3 VITON
242594	1	O-RING D14 X 1.78 SCH.70-EPDM
262106	1	BULKHEAD F. CABLE 6.5-14 BLACK
262107	1	NUT F. BULKHEAD CABLE BLACK
270211	1	FITT.DK S25 FORK L=37.5
320283	1	FITT.DK NUT 3/4"BSP
322054	1	UNION NUT BLACK S61 x 2
333561	1	FITT.DK ELB.1" EC RETURN
333583	1	END PIECE FOR BYPASS
333594	1	CONNECTING PIECE F. BYPASS
333815	1	DISTANCE RING
334056	1	COVER F/MOTOR HOUSE EC DIST.
334062	1	CONNECT. BRANCH F/EC OP. UNIT
334531	1	CLAMP HOSE PLASTIC 3/4"
334547	1	CONNECTING PIECE F. PRESSURE
334548	1	END COVER
334550	1	MOTOR HOUSE SECT VALVE
334551	1	GRIP F.MAN.OP.EC ON/OFF GREEN
334669	1	VALVE CONE D14/D7-SH 63 WHITE
411045	1	SCREW M4 X 16MM STAINLESS
440673	1	SCREW F.PLASTIC 5X12 SS
460817	1	NUT HEX M8 STAINLESS DIN 934
470643	1	WASHER LOCK
471126	1	WASHER, M8, Ø16/ 8.4X 1.6, SS
724621	1	FITT.DK HB 3/4"ASSY F.3/4" NUT
725061	1	CABLE - EC 12WIRE L=6000mm
725257	1	SPINDLE SECT. F/EC DISTRIBUTOR
725781	1	CONNECTING CABLE L=6000-AC 5
728010	1	DISTRIB HOUSING W/CONST PR GRN
728027	1	BUSHING WITH SEAT
728072	1	CABLE,20-PIN,6M EC/4
728073	1	CABLE,20-PIN,6M, EC/3
728141	1	CIRCUIT BOARD F.EC7 CONN. BOX
728887	1	CIRCUIT BOARD EC CONTROL
983003	1	CABLE ELEC.2X1MM WIRE BLACK EC
28030003	1	CLAMP HOSE GEAR P1" 6716
28082100	1	SCREW F. BOX LID 1/4" L=20
33508700	1	BOX BOTTOM 160X80X40 BLACK 1-HOLE
33508800	1	LID 160X80X15 BLK W/SCREWS
44076200	1	PT TORNILLO 50X16 WN5451 rsf t
72048000	1	MOTOR, DISTRIBUTION 1:300
72136500	1	UNIV. CONNECTION BOX F. EC

WWW.ROLTRONIK.PL

parts-n°	order qty	description
72137200	1	MCROSWCH ASSY F.BOOM VLV 300:1
92702403	1	HOSE PVC SUCT GRAY 1"
92703203	1	HOSE R X3/4" X300PSI WP X0012"

WWW.ROLTRONIK.PL

HARDI	**Agroparts: www.HARDI-INTERNATIONAL.com**	
	PRESSURE REGULATOR - S93 06 B0370-HIN, 01:01:16	Page 0 Date 16.03.2016 13:34

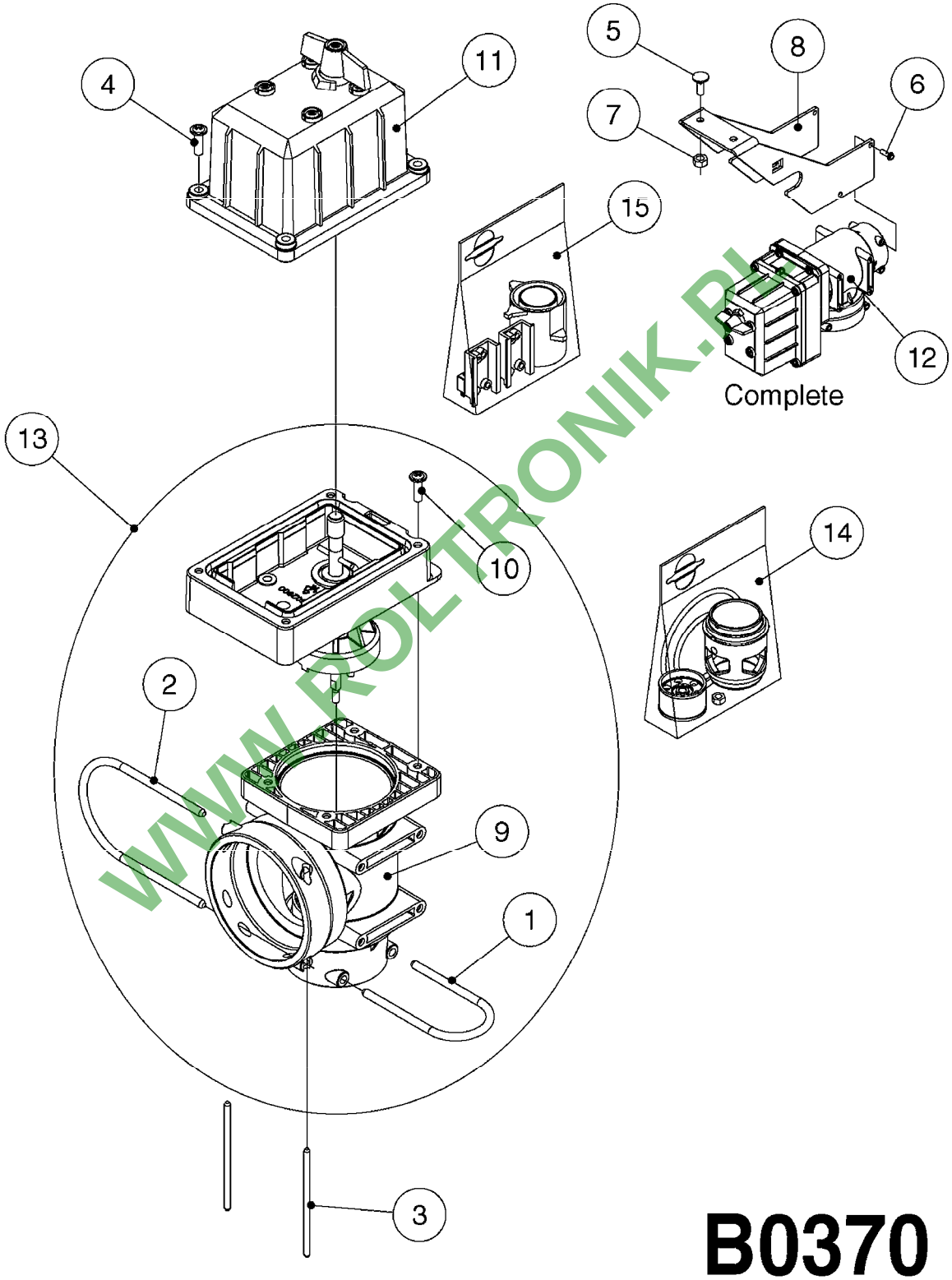

WWW.ROLTRONIK.PL

PRESSURE REGULATOR - S93 06
B0370-HIN, 01:01:16

Pos.	parts-n°	order qty	description
1	145996	1	FITT.DK S-67 FORK
2	145997	1	FITT.DK S-93 FORK
3	147767	1	PIN 5Ø X 60 S-93 DOUBLE CLAMP
4	440677	1	SCREW F. PLASTIC 5X20 SS
5	440695	1	BOLT CARRIAGE M8X25
6	440698	1	SCREW F.PLASTIC 6X18 SS HEXHD
7	460143	1	NUT HEX M8 LOCK A2 DIN985
8	16244000	1	BRACKET FOR REG. NAV, PAINTED NAVIGATOR PLATFORM BRACKET
9	33510800	1	HOUSING F.PRESS.REG.S67/S93
10	44076200	1	PT TORNILLO 50X16 WN5451 rsf t
11	72374200	1	MOTOR HOUS.REG.1:150 ENCODER
12	72425500	1	REGULATOR S67/S93 CROSS-DRILL
12	72678700	1	REGULATOR S67/S93 CROSS-DRILL CERAMIC COMPONENTS
13	72481600	1	BAG W. CONSOLE&SPINDLE COMPL
14	72678900	1	BAG W.CONE/CYL/GASKET CERAMIC CERAMIC COMPONENTS
14	74190800	1	BAG W.CONE/CYL. AND GASKET
15	74187500	1	SWITCH 5A PRESS.REG REP.KIT 08

WWW.ROLTRONIK.PL

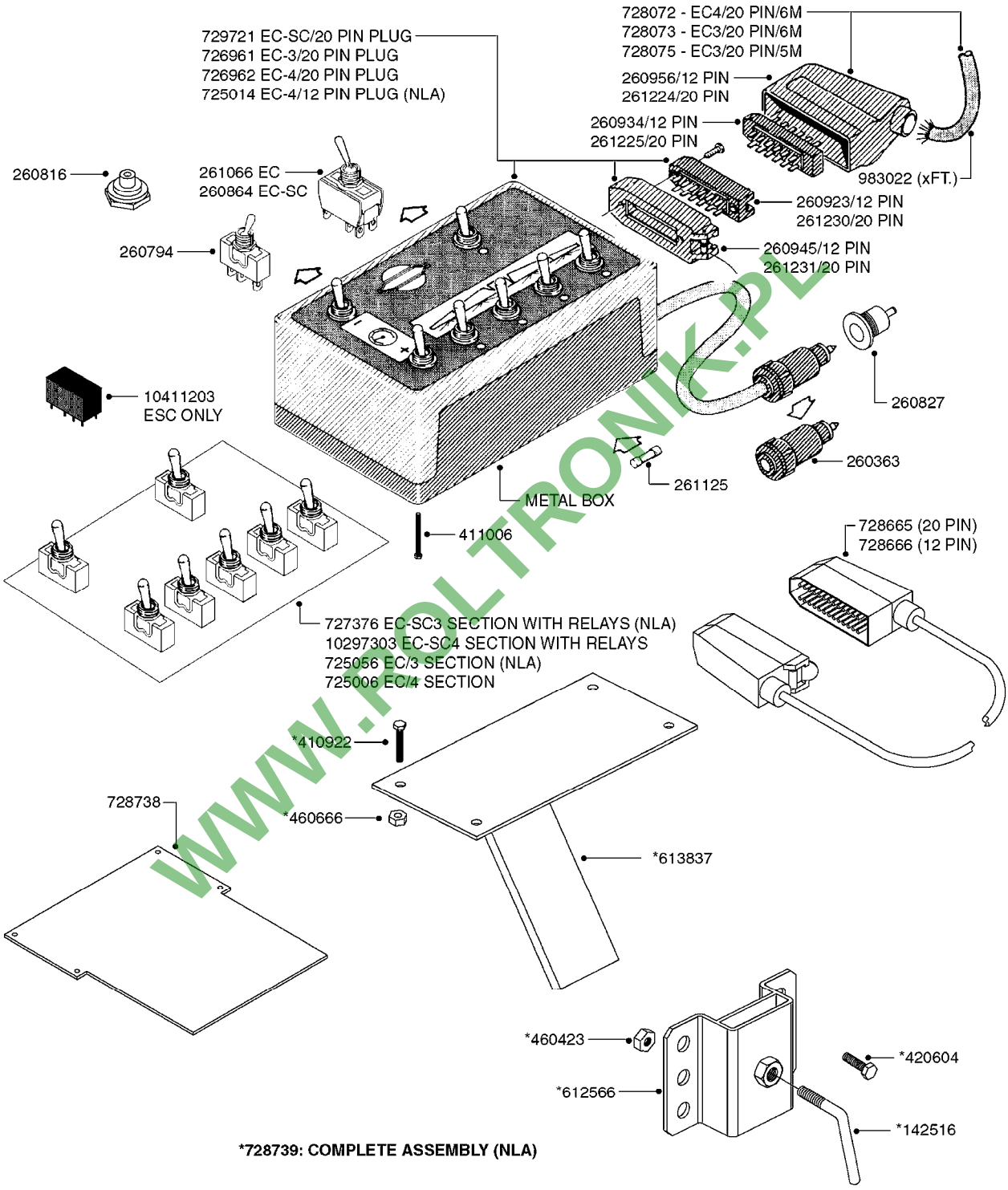

*728739: COMPLETE ASSEMBLY (NLA)

COMPLETE ASSEMBLIES
WHOLEGOODS ITEMS

B0390

WWW.POLTRONIK.PL

parts-nº	order qty	description
142516	1	SCREW SET M10 BENT F. LOCKING
260363	1	PLUG 2 POLE 12V
260794	1	SWITCH F.PRESS ADJ.EC CONTROL
260816	1	CAP W/RUBBER BOOT F.EC SWITCH
260827	1	PLUG F.EC ATTACHMENTS
260864	1	SWITCH F.HY BOOM CONTROL BOX
260923	1	PLUG INSERT 12 POLE FEMALE
260934	1	PLUG INSERT 12 POLE MALE
260945	1	PLUG HOUSE 12 POLE FEMALE
260956	1	PLUG HOUSE 12 POL.MALE
261066	1	SWITCH 2 POLE
261125	1	FUSE 5 X 20 500mA
261224	1	PLUG HOUSING F/20 POLE MALE
261225	1	PLUG INSERT 20 POLE MALE
261230	1	PLUG INSERT 20 POLE FEMALE
261231	1	PLUG HOUSING 20 POLE FEMALE
410922	1	CYL.SKR 8.8 DEL M4X20 RST
411006	1	SCREW M4X40 SLOTTED
420604	1	BOLT HEX 8.8 DEL M10X25 FT DIN933
460423	1	NUT HEX M10X1.5 LOCK
460666	1	NUT HEX M4
612566	1	MOUNT BRACKET F.FAN CABLE ASSY
613837	1	MOUNT PLATE FOR EC CONTROL BOX
725006	1	CIRCUIT BOARD 4 VALVE
725014	1	CONTROL BOX EC 4 SEC./12 PIN
725056	1	PRINTED CIRC.W SW 3WAY 726961
726961	1	CONTROL BOX EC 3 SEC./20 PIN
726962	1	CONTROL BOX EC 4 SEC./20 PIN
727376	1	CIRCUIT BOARD F.ESC 3 BANK
728072	1	CABLE,20-PIN,6M EC/4
728073	1	CABLE,20-PIN,6M, EC/3
728075	1	CABLE F.CONTROL BOX 5M EC/3
728665	1	CABLE EXT.-QUICK ATTACH 20 PIN
728666	1	CABLE-QUICK ATTACH 12 PIN
728738	1	DOUB.CONT.BOX & OR F/M PLATE
728739	1	IN CAB CONTROL MOUNT KIT
729721	1	CONTROL BOX ESC3
983022	1	WIRE 12 x 0.5 x 2MM x 12"
10297303	1	CIRCUIT BOARD FOR T.M.S.
10411203	1	RELAY T-82

WWW.RO-TRONIK.PL

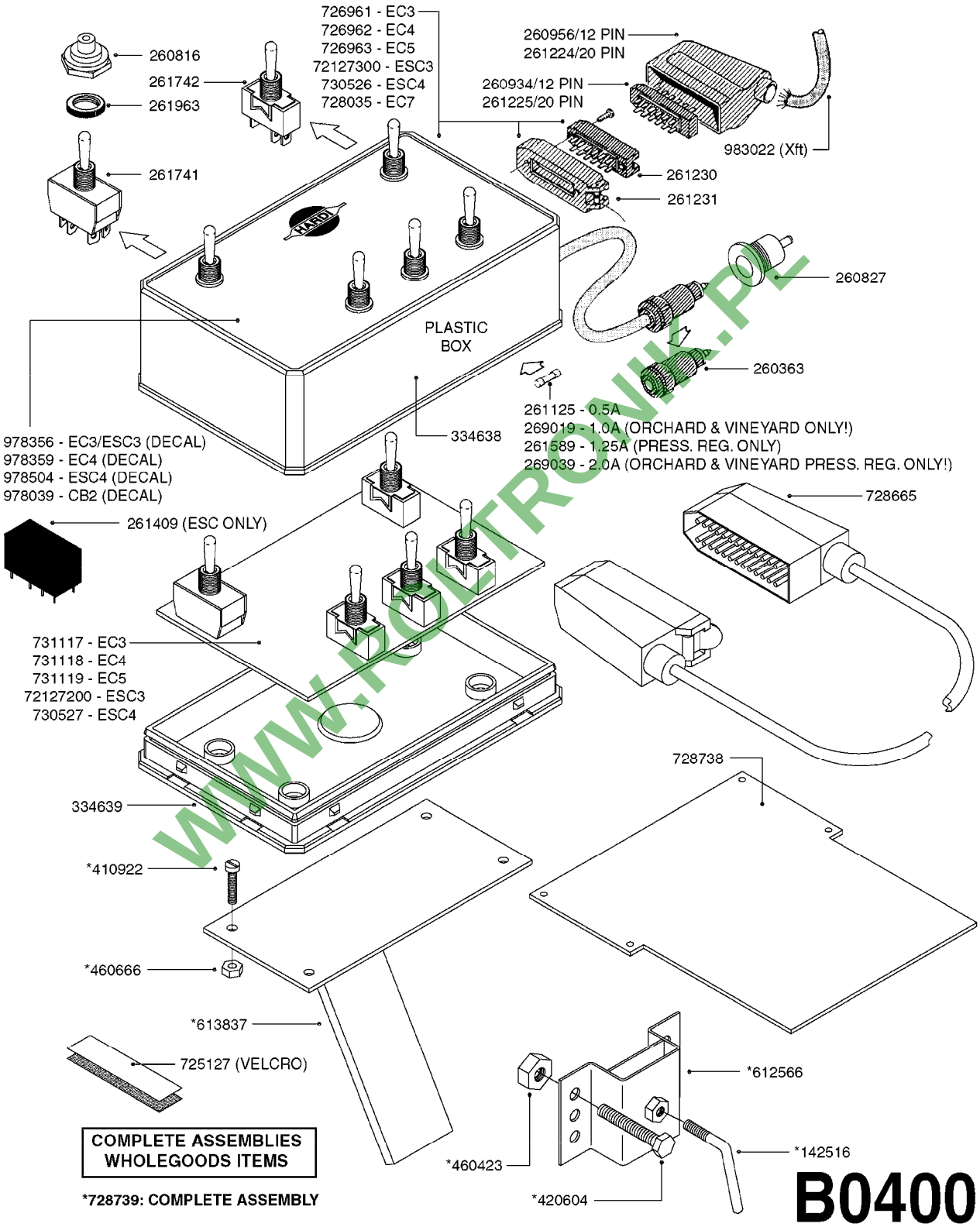

COMPLETE ASSEMBLIES WHOLEGOODS ITEMS

***728739: COMPLETE ASSEMBLY**

B0400

WWW.ROETRONIK.PE

parts-nº	order qty	description
142516	1	SCREW SET M10 BENT F. LOCKING
260363	1	PLUG 2 POLE 12V
260816	1	CAP W/RUBBER BOOT F.EC SWITCH
260827	1	PLUG F.EC ATTACHMENTS
260934	1	PLUG INSERT 12 POLE MALE
260956	1	PLUG HOUSE 12 POL.MALE
261125	1	FUSE 5 X 20 500mA
261224	1	PLUG HOUSING F/20 POLE MALE
261225	1	PLUG INSERT 20 POLE MALE
261230	1	PLUG INSERT 20 POLE FEMALE
261231	1	PLUG HOUSING 20 POLE FEMALE
261409	1	RELAY 12V F. ESC CNTRL BOX '96
261589	1	FUSE 5 X 20 1.25 AMP
261741	1	SWITCH 2 POLE 12V TOGGLE PRESS
261742	1	SWITCH 2 POLE 12V ON/OFF
261963	1	NUT F.EC SWITCH
269019	1	FUSE 5 X 20 1.0 AMP
269039	1	FUSE 5 X 20 2.0 AMP
334638	1	HOUSING F.EC PLASTIC BOX UPPER
334639	1	COVER F.EC PLASTIC BOX -LOWER
410922	1	CYL.SKR 8.8 DEL M4X20 RST
420604	1	BOLT HEX 8.8 DEL M10X25 FT DIN933
460423	1	NUT HEX M10X1.5 LOCK
460666	1	NUT HEX M4
612566	1	MOUNT BRACKET F.FAN CABLE ASSY
613837	1	MOUNT PLATE FOR EC CONTROL BOX
725127	1	VELCRO KIT
726961	1	CONTROL BOX EC 3 SEC./20 PIN
726962	1	CONTROL BOX EC 4 SEC./20 PIN
726963	1	CONTROL BOX EC 5 SEC./20 PIN
728035	1	CONTROL BOX EC 7 SEC.
728665	1	CABLE EXT.-QUICK ATTACH 20 PIN
728738	1	DOUB.CONT.BOX & OR F/M PLATE
728739	1	IN CAB CONTROL MOUNT KIT
730526	1	CON BX 4SEC/20PIN alt72127400
730527	1	CIRCUIT B.ESC4 PLAST.W/SWITCH
731117	1	CIRCUIT B.EC3 PLASTIC W/SWITCH
731118	1	CIRCUIT B.EC4 PLASTIC W/SWITCH
731119	1	CIRCUIT B.EC5 PLASTIC W/SWITCH
978039	1	DECAL CONTROL BOX CB4 MISTBLOW
978356	1	DECAL CONTRL BOX EVC/ESC3 ABS
978359	1	DECAL CONTROL BOX EC4 ABS
978504	1	DECAL CONTROL BOX ESC4 ABS
983022	1	WIRE 12 x 0.5 x 2MM x 12"
72127200	1	CIRCUIT B.ESC3 PLAST.W/SWITCH
72127300	1	CONTROL BOX ESC 3 SEC./20 PIN

WWW.RGLTRONIK.PL

12 VOLT OUTLET BOX
B0410-HIN, 01:01:16

SINGLE REMOTE
12V OUTLET

260827

COMPLETE ASSEMBLIES
WHOLEGOODS ITEMS

817925 COMPLETE ASSEMBLY

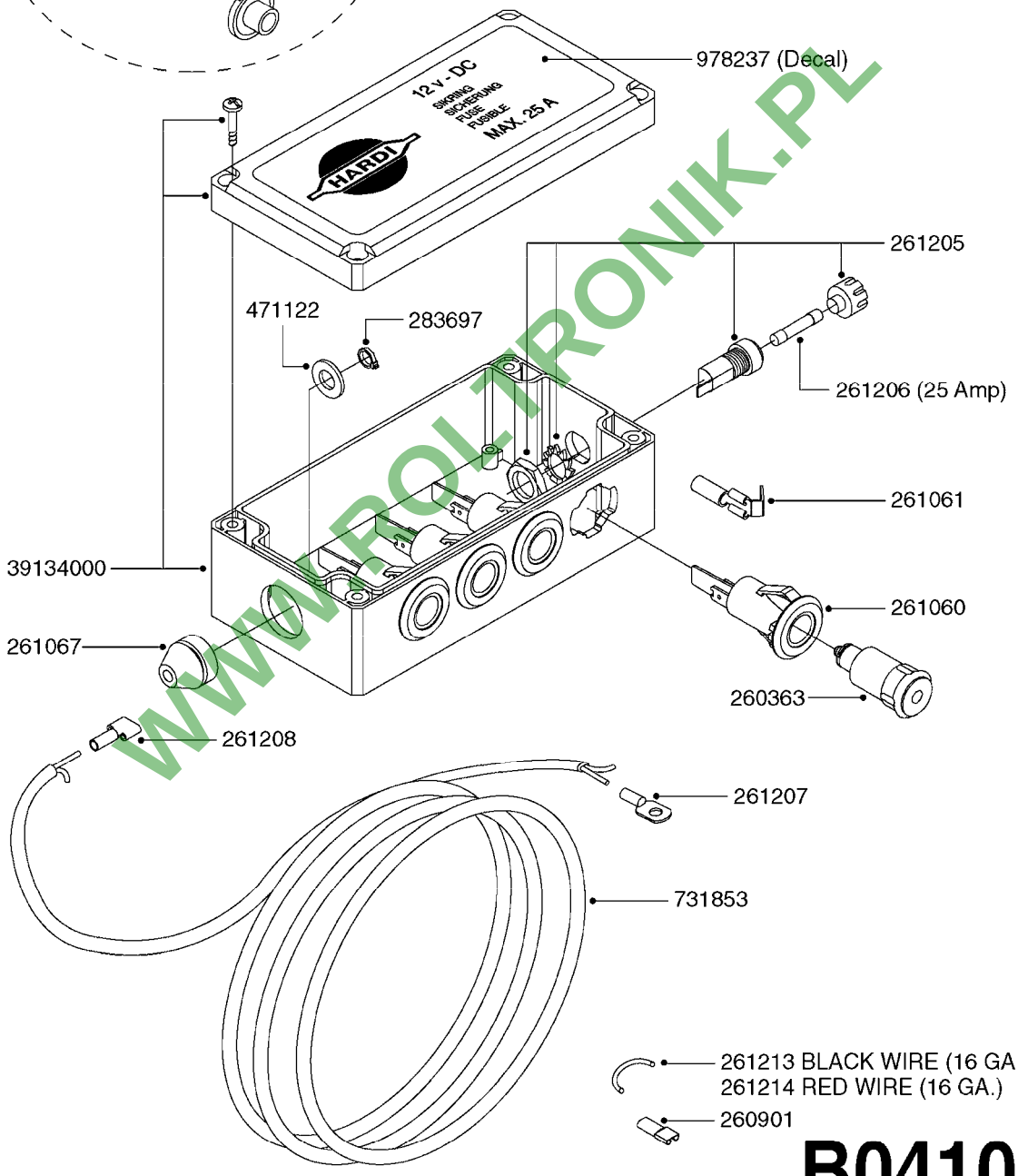

B0410

WWW.ROLTRONIK.PL

12 VOLT OUTLET BOX
B0410-HIN, 01:01:16

parts-n°	order qty	description
260363	1	PLUG 2 POLE 12V
260827	1	PLUG F.EC ATTACHMENTS
260901	1	SPADE F.ELEC CONN.1.5MM BLUE
261060	1	PLUG F.EC ATTACHMENTS
261061	1	SPADE F.ELEC.2 WAY CONNECTOR
261067	1	GROMMET 10-14 GREY
261205	1	FUSE HOLDER
261206	1	FUSE 25 A
261207	1	ELECTRIC CONNECTOR 4MM
261208	1	SPADE F.ELEC.CONNECTOR 4MM
261213	1	WIRE 6.4MM BLACK
261214	1	WIRE 6.4MM RED
283697	1	TIESTRAP 200MM
471122	1	WASHER, M10, Ø20/10.5X 2.0, SS
731853	1	CABLE 2X4MM L=138"
817925	1	OUTLET BOX 12 VOLT ELEC.
978237	1	DECAL OUTLET BOX
39134000	1	BOX, COMPLETE, 12V POWER BOX

WWW.ROLTRONIK.PL

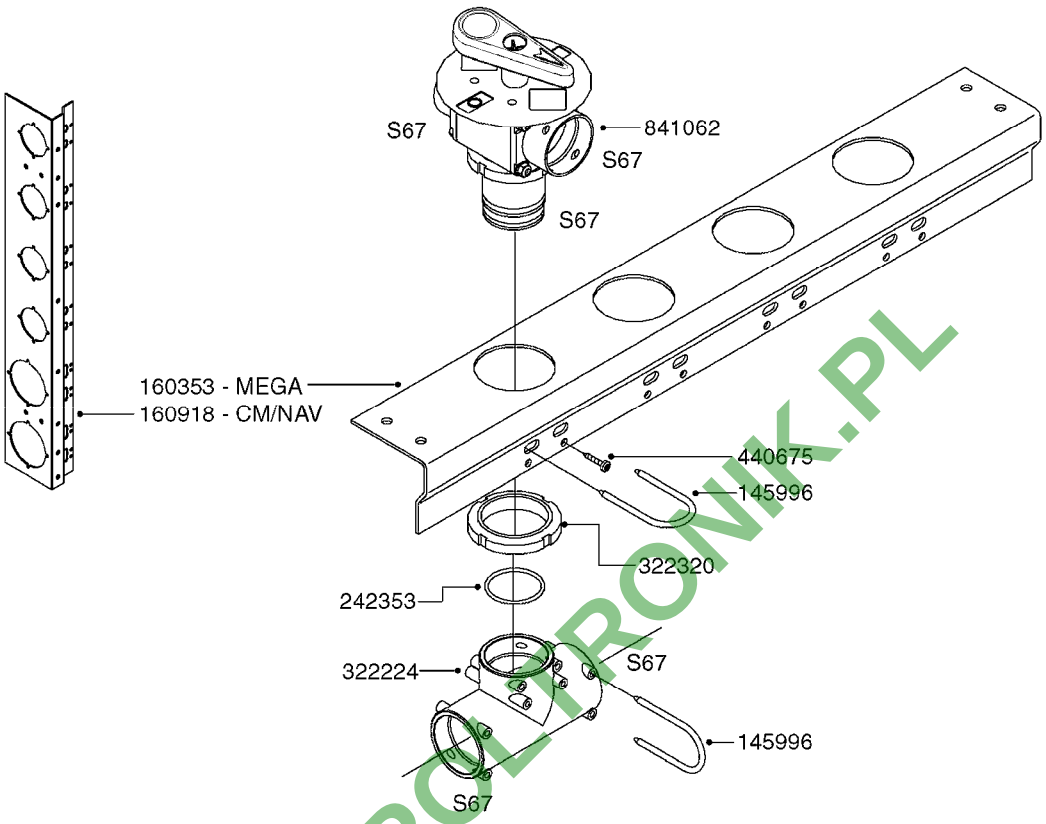

FOR S67 FITTINGS
SEE PAGE L0100

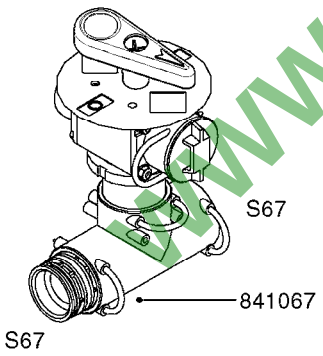

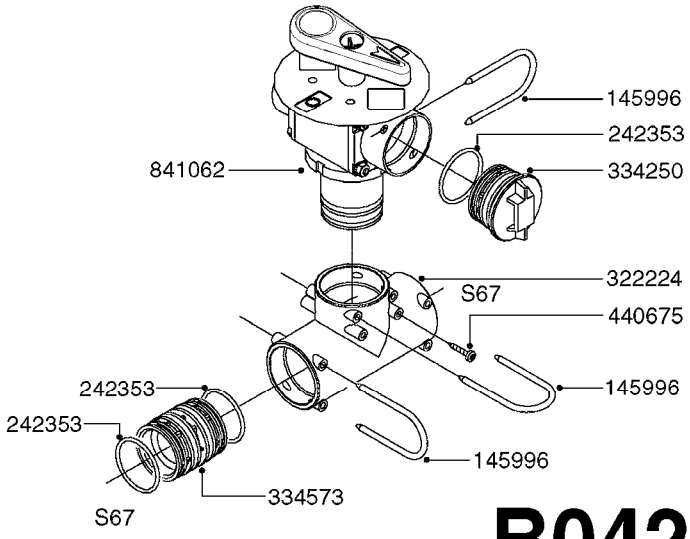

B0420

WWW.ROLTRONIK.PL

MANIFOLD SYSTEM - PRESSURE
B0420-HIN, 01:01:16

parts-n°	order qty	description
145996	1	FITT.DK S-67 FORK
160353	1	BRACKET F.PRESSURE MANIFOLD
160918	1	BRACKET F. MANIFOLD CM
242353	1	O-RING D44.2X3.0 VITON F.S-67
322224	1	FITT.DK S-67 TEE
322320	1	NUT F.3 WAY VALVE S56
334250	1	FITT.DK S-67 PLUG
334573	1	FITT.DK S-67 CONNECTOR
440675	1	SCREW F. PLASTIC 5X16 SS
841062	1	VALVE KIT S67 PRESS. MANIFOLD
841067	1	VALVE S67 PRESS.W/TEE MANIFOLD

WWW.ROLTRONIK.PL

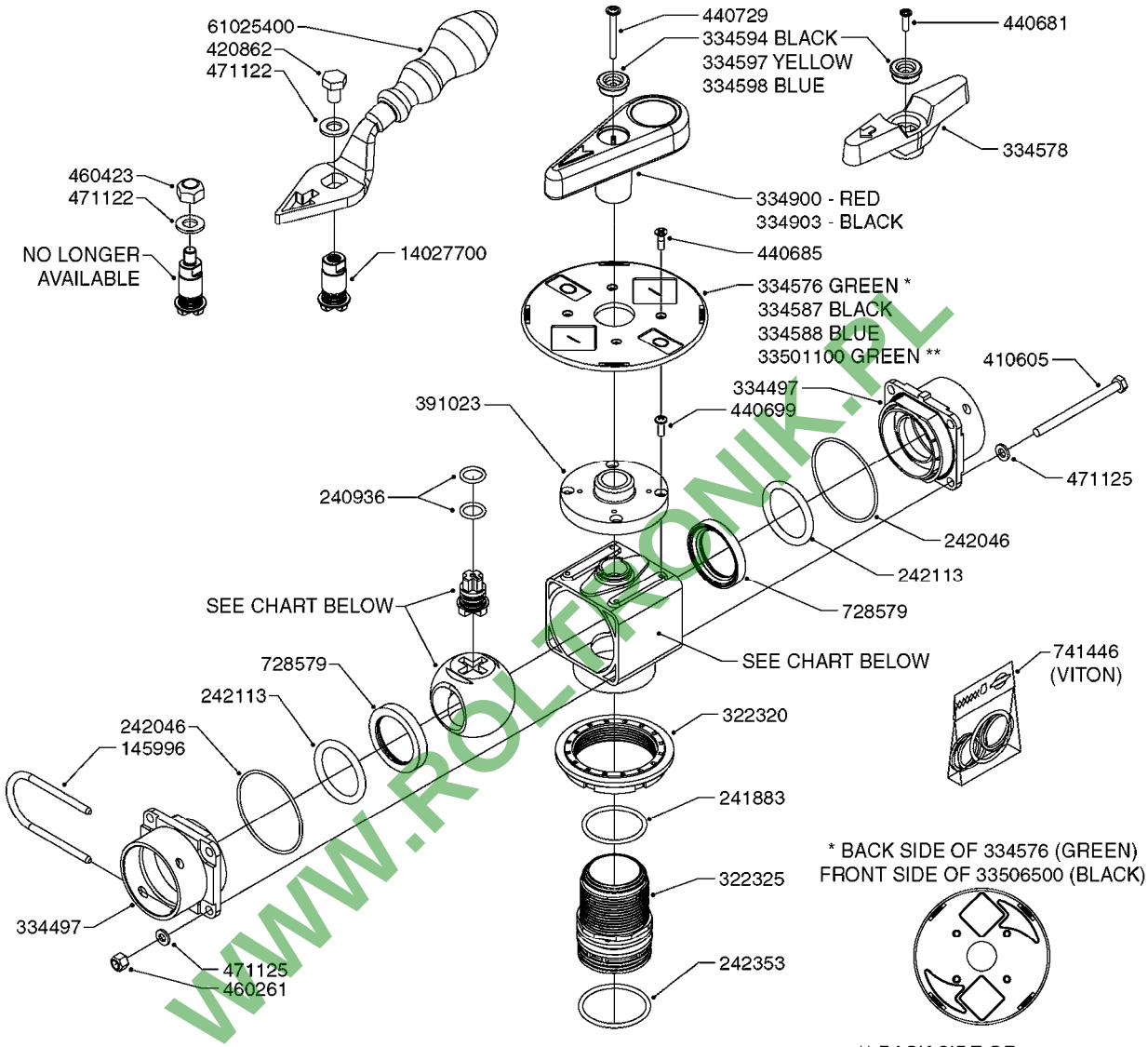

WWW.ROLTRONIK.PL

728391	334594	334576	390204	390623	-	334600
728393	334598	334588	390238	390251	-	334600
728945	334597	-	390262	390777	-	334600
729796	334594	334587	390204	390623	-	334600
840062	334594	334576	391180	390623	-	334600
841062	334594	334576	390204	390623	-	334600
72172100	-	33501100	391039	390623	391023	14027700
72172200	-	-	391039	390623	-	334600
72283600	334594	33506500	391180	390623	391023	334600
72292500	-	-	391180	390623	-	14027700
72538000	-	-	391039	390623	391023	14075700
72691600	334594	334587	390262	390623	-	334600

* BACK SIDE OF 334576 (GREEN)
FRONT SIDE OF 33506500 (BLACK)

** BACK SIDE OF 33501100

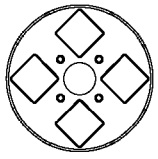

BACK SIDE OF 33506500 (BLACK)

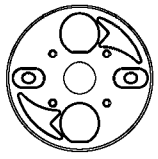

B0430

Agroparts: www.HARDI-INTERNATIONAL.com

MANIFOLD - S67 VALVE
B0430-HIN, 01:01:16

Date 16.03.2016 13:34

parts-n°	order qty	description
145996	1	FITT.DK S-67 FORK
240936	1	O-RING D13.3X2.4 NITRIL
241883	1	O-RING D39.2X3 NITRIL 242020
242046	1	O-RING D60X2
242113	1	O-RING D37.5X5.3 VITON
242353	1	O-RING D44.2X3.0 VITON F.S-67
322320	1	NUT F.3 WAY VALVE S56
322325	1	FITT.DK S-67 X 1-1/2"BSP LONG
334497	1	END COVER 3 WAY VALVE S-67
334576	1	FACE PLATE F. BALL VALVE GREEN
334578	1	HANDLE FOR VALVE 'OLD' STYLE
334587	1	FACE PLATE F.BALL VALVE BLACK
334588	1	FACE PLATE F. BALL VALVE BLUE
334594	1	PLUG F.VALVE HANDLE BLACK
334597	1	PLUG F.VALVE HANDLE YELLOW
334598	1	PLUG F.VALVE HANDLE BLUE
334600	1	SPINDLE F.3 WAY VALVE
334900	1	HANDLE F.3 WAY VALVE TALL '00
334903	1	HANDLE S67/93 VALVE BLACK
390204	1	BALL F. 3 WAY SUCTION VALVE
390238	1	BALL F. 3 WAY PRESSURE VALVE
390251	1	MOTOR HOUSING F. 3-WAY VALVE
390262	1	BALL F. 2 WAY VALVE
390623	1	HOUSING F.3 WAY VALVE
390777	1	HOUSING F.BALL VALVE 3 WAY
391023	1	SMART VALVE MOUNTING BRACKET
391039	1	BALL F. S67 SMART VALVE
391180	1	BALL F. AGITATOR S67 ARE 268
410605	1	BOLT HEX 8.8 DEL M6X80
420862	1	BOLT HEX 8.8 DEL M10X16 FT
440681	1	SCREW F. PLASTIC 4MM X 14LG SS
440685	1	SCREW F.PLASTIC 4X14 SS C-SUNK
440699	1	SCREW F. PLASTIC 4MMM X12LG SS
440729	1	SCREW F. PLASTIC 4MM X40LG SS
460261	1	NUT HEX M6X1 LOCK A2 DIN985
460423	1	NUT HEX M10X1.5 LOCK
471122	1	WASHER, M10, Ø20/10.5X 2.0, SS
471125	1	WASHER, M6, Ø12/ 6.4X 1.6, SS
728391	1	VALVE S67 PRESSURE MANIFOLD
728393	1	VALVE 3 WAY F.AGITAT.SHUTOFF
728579	1	SEAL F BALL
728945	1	VALVE 2-WAY YELLOW W.S-67 ENDS
729796	1	VALVE S-67 MANUAL D33 J-D
741446	1	REPAIR KIT F.S67 VALVE - VITON
840062	1	VALVE S67 PRESSURE AGITATION
841062	1	VALVE KIT S67 PRESS. MANIFOLD
14027700	1	SPINDLE F.SMART VALVE S67 L=36
14075700	1	SPINDLE F.SMART VALVE S67 L=81
33501100	1	FACE PLATE F.SMART VALVE GREEN
33506500	1	FACE PLATE F.BALL VALVE BLACK
61025400	1	HANDLE SMART VALVE
72172100	1	VALVE S67 "V1" SMART VALVE
72172200	1	VALVE S67 "V2" SMART VALVE
72283600	1	VALVE S67 AGITATION NCM
72292500	1	VALVE S67 SMART VALVE NEW NAV
72538000	1	VALVE S67, LONG SPINDLE
72691600	1	VALVE, S67, 2-WAY F. FILLER

WWW.ROLTRONIK.PL

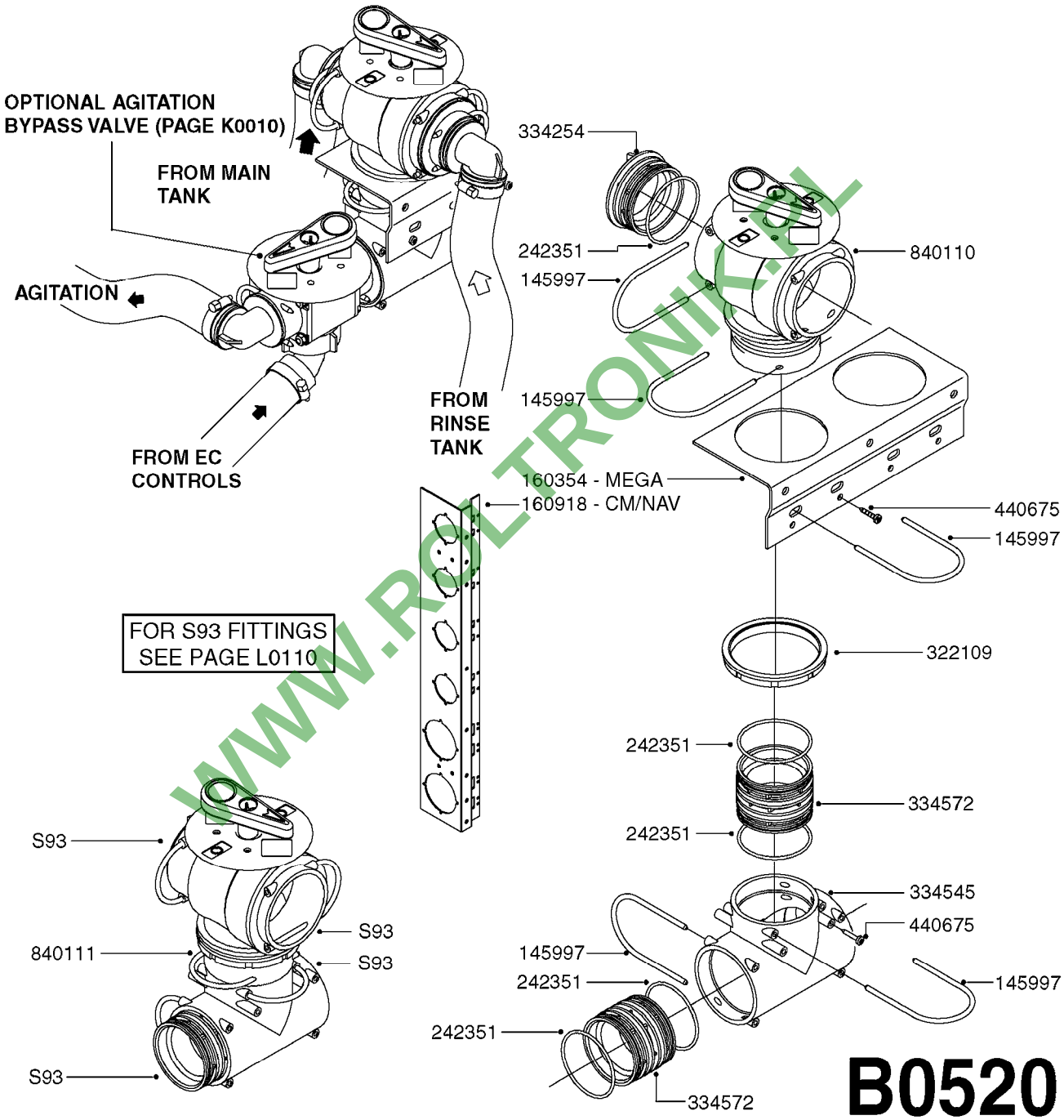

WWW.ROLTRONIK.PL

B0520

MANIFOLD SYSTEM - SUCTION
B0520-HIN, 01:01:16

Date 16.03.2016 13:34

parts-n°	order qty	description
145997	1	FITT.DK S-93 FORK
160354	1	BRACKET F.SUCTION MANIFOLD
160918	1	BRACKET F. MANIFOLD CM
242351	1	O-RING D69.5X3.0 VITON F.S-93
322109	1	FITT.DK S-93 BULKHEAD NUT
334254	1	FITT.DK S-93 PLUG
334545	1	FITT.DK S-93 TEE
334572	1	FITT.DK S-93 ADAPTOR MALE MALE
440675	1	SCREW F. PLASTIC 5X16 SS
840110	1	VALVE SUCTION S-93 F.MANIFOLD
840111	1	VALVE SUCTION 3 WAY S-93 W.TEE

WWW.ROLTRONIK.PL

S93

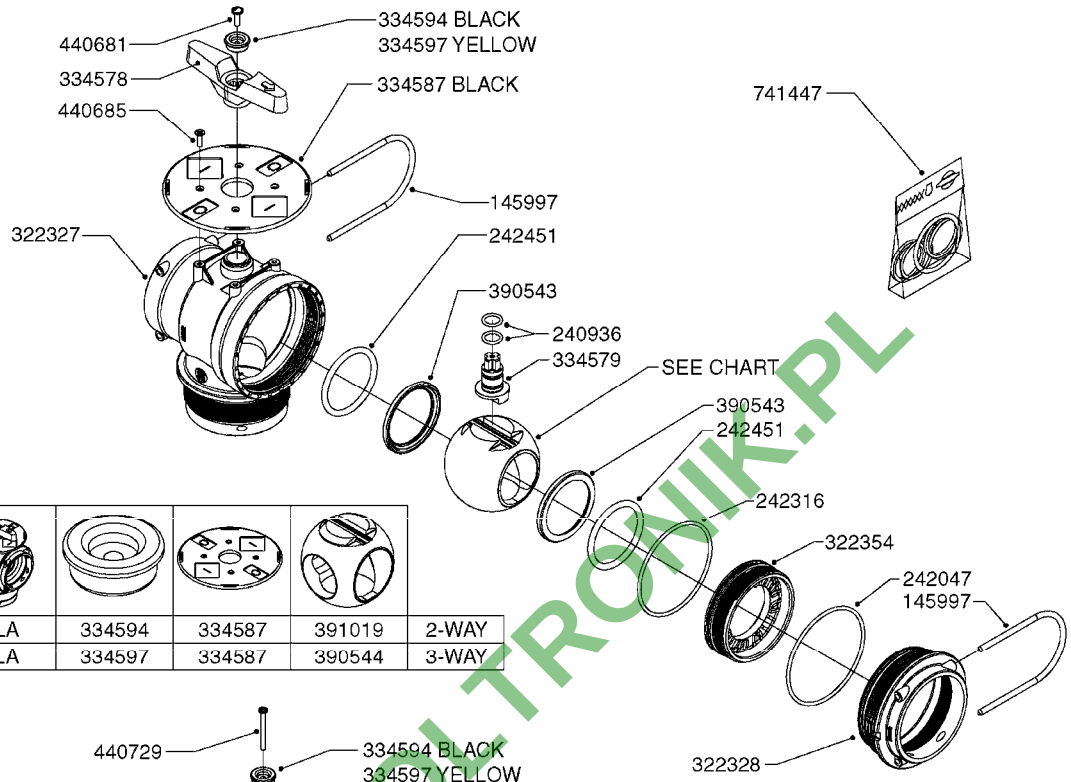

NLA	334594	334587	391019	2-WAY
NLA	334597	334587	390544	3-WAY

S93 (01)

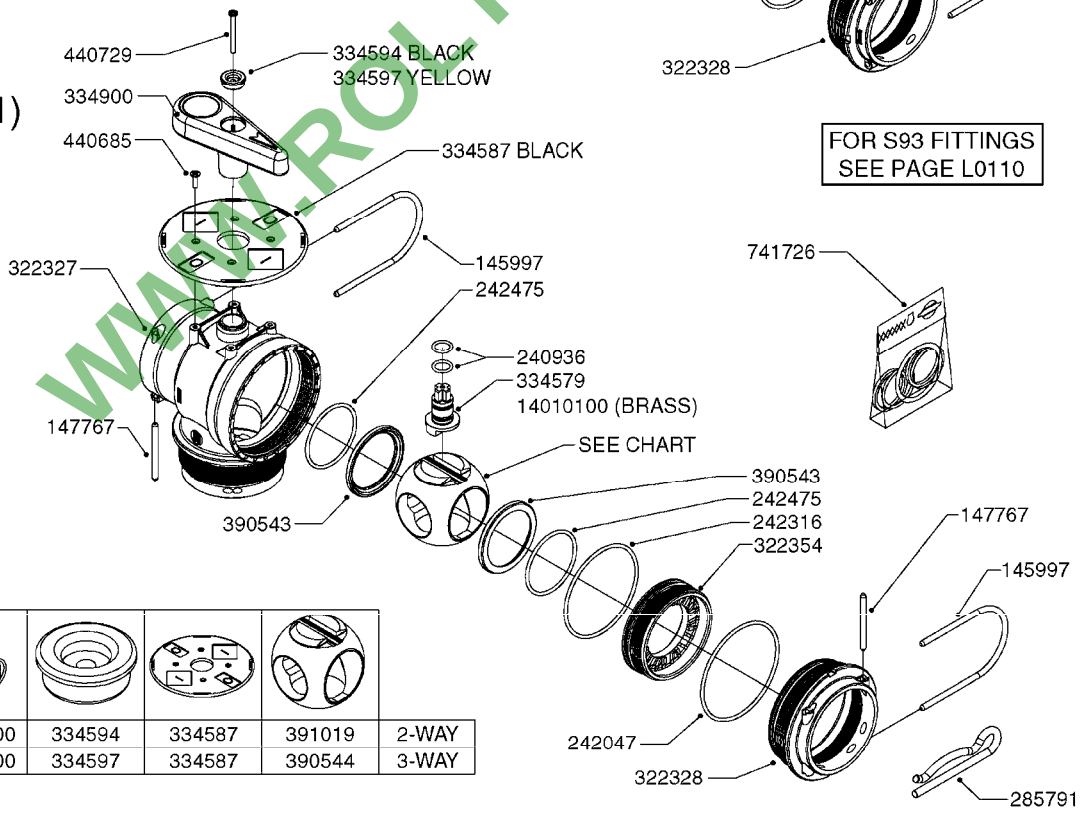

FOR S93 FITTINGS
SEE PAGE L0110

72082300	334594	334587	391019	2-WAY
72082400	334597	334587	390544	3-WAY

B0530

WWW.ROLTRONIK.PL

parts-nº	order qty	description
145997	1	FITT.DK S-93 FORK
147767	1	PIN 5Ø X 60 S-93 DOUBLE CLAMP
240936	1	O-RING D13.3X2.4 NITRIL
242047	1	O-RING 89.5 X 3.0 VITON
242316	1	O-RING D84.5X3.0 NITRIL
242451	1	O'RING D56.0 x 3.0 VITON
242475	1	O'RING D56.52x5.33 SH70-VITON
285791	1	HAIR PIN S93/S67
322327	1	HOUSING,VALVE,S93,220 PSI
322328	1	END CAP F.VALVE S-93
322354	1	THRUST PLATE F.3-WAY VALVES-93
334578	1	HANDLE FOR VALVE 'OLD' STYLE
334579	1	SPINDLE F.3 WAY VALVE S-93
334587	1	FACE PLATE F.BALL VALVE BLACK
334594	1	PLUG F.VALVE HANDLE BLACK
334597	1	PLUG F.VALVE HANDLE YELLOW
334900	1	HANDLE F.3 WAY VALVE TALL '00
390543	1	SEAT F.BALL 3-WAY VALVE S-93
390544	1	BALL F.3 WAY S93 VLVE/SUCT.MAN
391019	1	BALL F.2 WAY S93 SMART VALVE
440681	1	SCREW F. PLASTIC 4MM X 14LG SS
440685	1	SCREW F.PLASTIC 4X14 SS C-SUNK
440729	1	SCREW F. PLASTIC 4MM X40LG SS
741447	1	REPAIR KIT F.S93 VALVE - VITON
741726	1	REPAIR KIT F.S93 VALVE VIT.'02
14010100	1	SPINDLE F.SMART VALVE S-93
72082300	1	VALVE SUC.S-93 MAN.02 2 WAY
72082400	1	VALVE 2"-S93 3 WAY

WWW.ROLETRONIK.PL

	Agroparts: www.HARDI-INTERNATIONAL.com	
HARDI	SMART VALVE-S93 MANIFOLD VALVE B0540-HIN, 01:01:16	Page 0 Date 16.03.2016 13:34

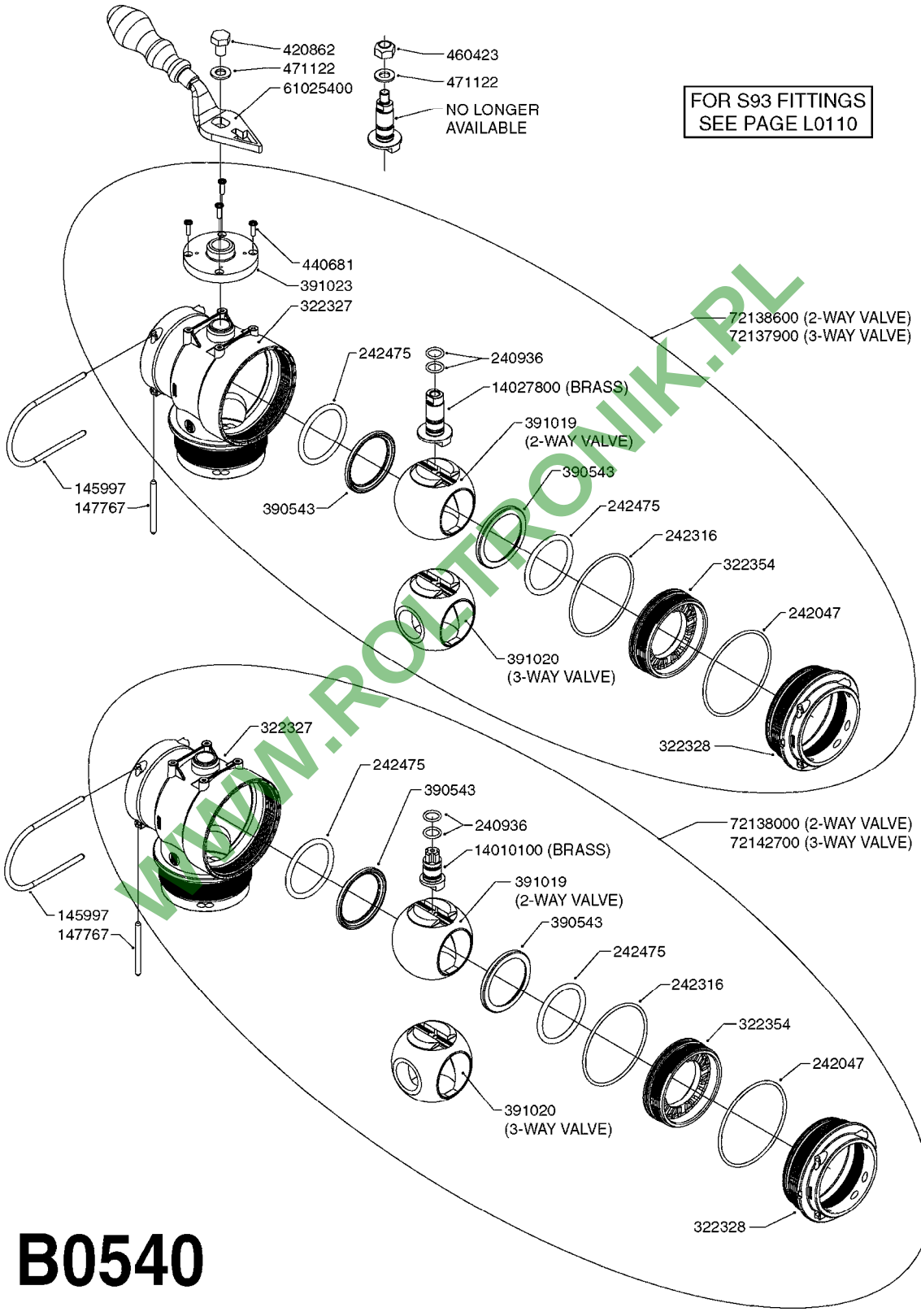

B0540

WWW.ROLTRONIK.PL

parts-n°	order qty	description
145997	1	FITT.DK S-93 FORK
147767	1	PIN 5Ø X 60 S-93 DOUBLE CLAMP
240936	1	O-RING D13.3X2.4 NITRIL
242047	1	O-RING 89.5 X 3.0 VITON
242316	1	O-RING D84.5X3.0 NITRIL
242475	1	O'RING D56.52x5.33 SH70-VITON
322327	1	HOUSING,VALVE,S93,220 PSI
322328	1	END CAP F.VALVE S-93
322354	1	THRUST PLATE F.3-WAY VALVES-93
390543	1	SEAT F.BALL 3-WAY VALVE S-93
391019	1	BALL F.2 WAY S93 SMART VALVE
391020	1	BALL F.3 WAY S93 SMART VALVE
391023	1	SMART VALVE MOUNTING BRACKET
420862	1	BOLT HEX 8.8 DEL M10X16 FT
440681	1	SCREW F. PLASTIC 4MM X 14LG SS
460423	1	NUT HEX M10X1.5 LOCK
471122	1	WASHER, M10, Ø20/10.5X 2.0, SS
14010100	1	SPINDLE F.SMART VALVE S-93
14027800	1	SPINDLE F.SMART VALVE S-93
61025400	1	HANDLE SMART VALVE
72137900	1	VALVE S93 "V1" SMART VALVE
72138000	1	VALVE S93 "V2" SMART VALVE
72138600	1	VALVE S93 "V3" SMART VALVE
72142700	1	VALVE S93 "V4" SMART VALVE

WWW.ROLTRONIK.PL

HARDI	**Agroparts: www.HARDI-INTERNATIONAL.com**	
	PRESSURE RELIEF VALVE B0580-HIN, 01:01:16	Page 0 Date 16.03.2016 13:34

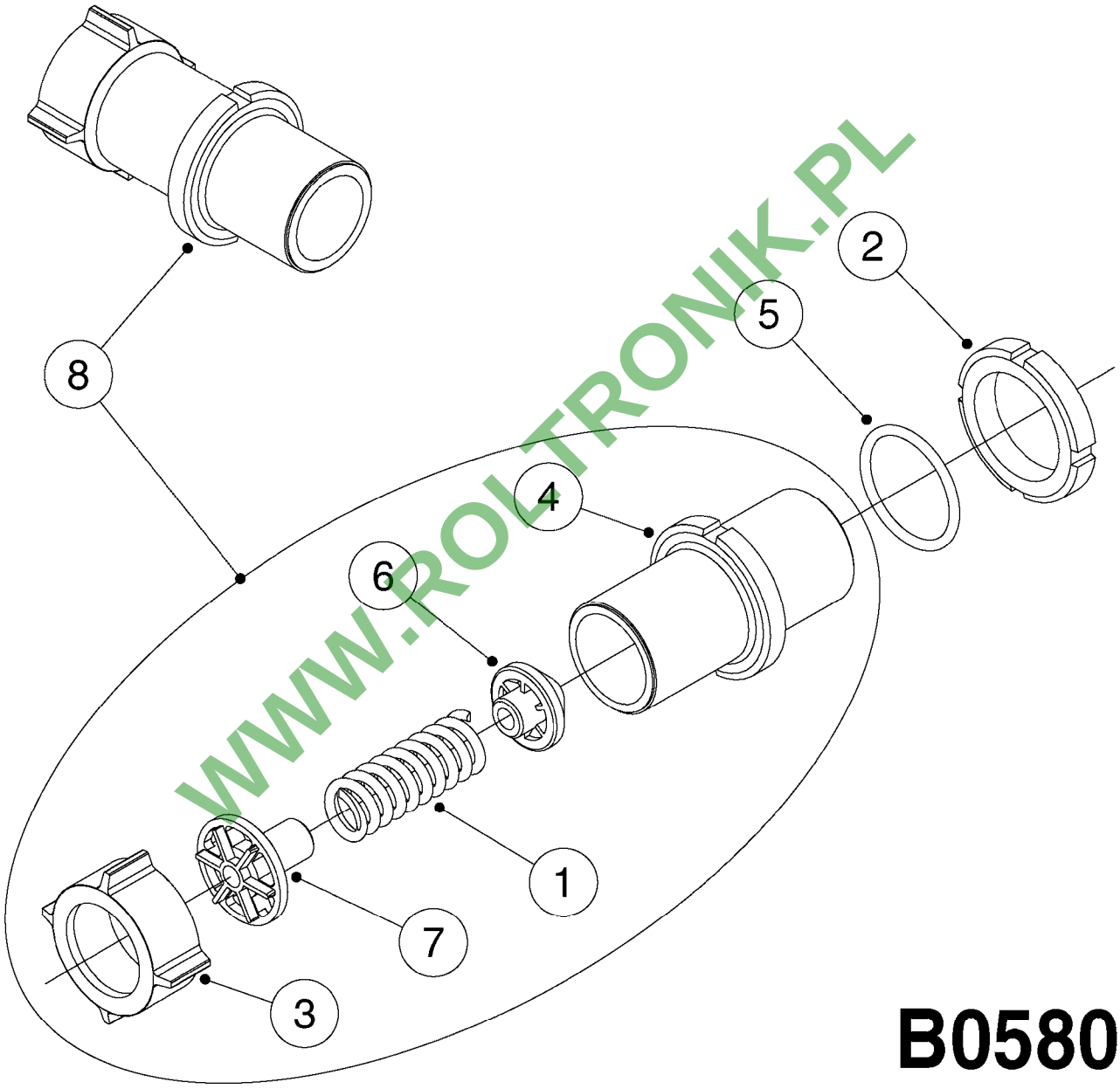

WWW.ROLTRONIK.PL

B0580

PRESSURE RELIEF VALVE
B0580-HIN, 01:01:16

Pos.	parts-n°	order qty	description
1	220706	1	SPRING SCF 12 BAR
1	220734	1	SPRING SCF 25 BAR
2	320795	1	FITT.DK NUT 1-1/2" BSP JAMB
3	320821	1	FITT.DK NUT 1-1/2" BSP
4	321915	1	HOUSING F. SAFETY VALVE
5	330072	1	O-RING D53.5/D45.5X4
6	333853	1	CONE D35.4
7	333864	1	GUIDE F. SAFETY VALVE SPRING
8	722971	1	SAFETY VALVE SCF 217PSI(15BAR)
8	724891	1	SAFETY VALVE SCF 25 BAR

WWW.ROLTRONIK.PL

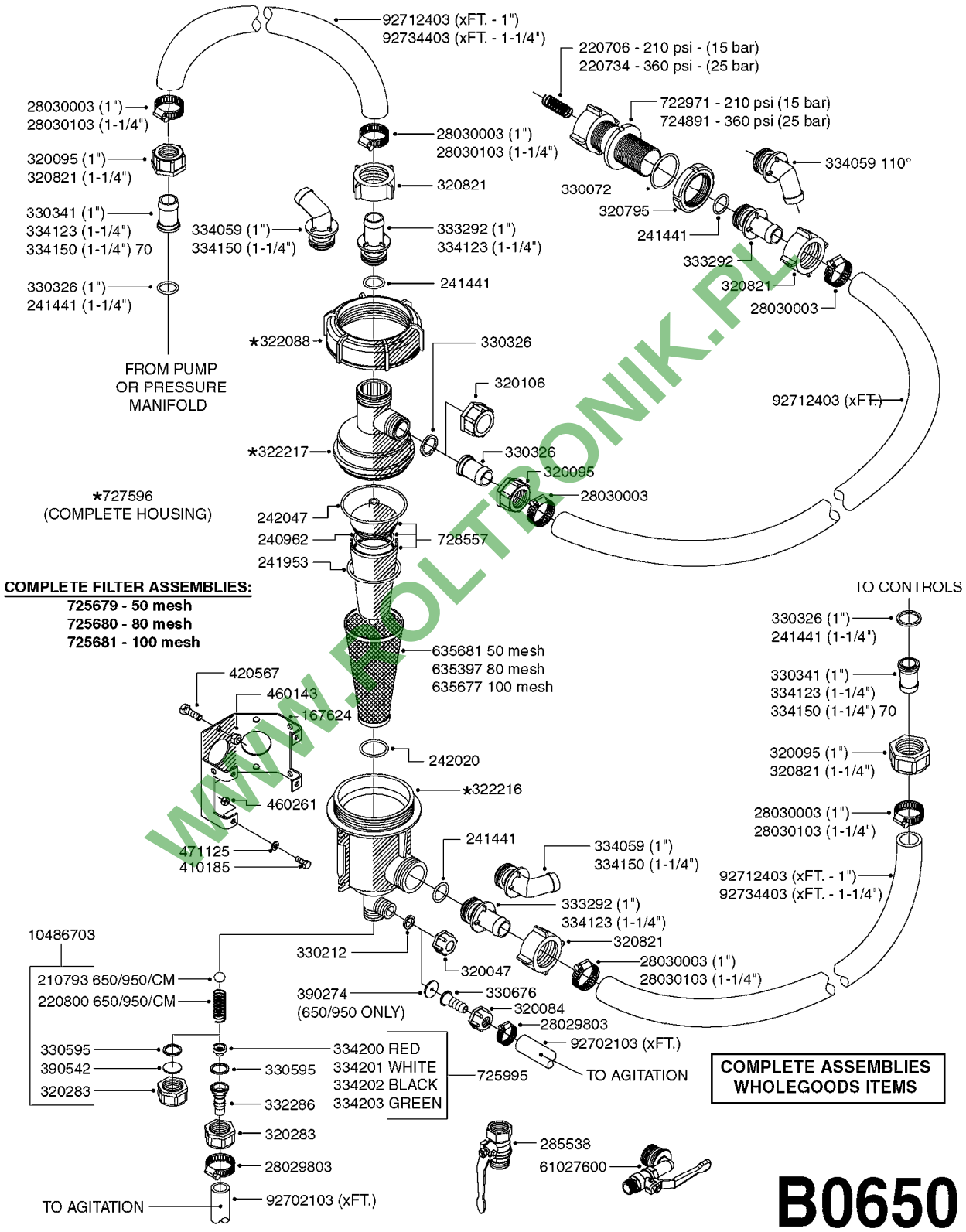

WWW.ROLTRONIK.PL

HARDI	**Agroparts: www.HARDI-INTERNATIONAL.com**	
	SELF CLEANING FILTER-SCREW TOP B0650-HIN, 01:01:16	Page 1 Date 16.03.2016 13:34

parts-n°	order qty	description
10486703	1	KIT F.UPDATING SCF
167624	1	MOUNT BRACKET F. SCF
210793	1	BALL F.SCF
220706	1	SPRING SCF 12 BAR
220734	1	SPRING SCF 25 BAR
220800	1	SPRING F.SCF
240962	1	O-RING D57,2X3 NITRIL
241441	1	O-RING D29.3X3
241953	1	O-RING D73,03X3,53 VITON
242020	1	O-RING 39.2 X 3 VITON
242047	1	O-RING 89.5 X 3.0 VITON
28029803	1	CLAMP HOSE GEAR P1/2" 6708
28030003	1	CLAMP HOSE GEAR P1" 6716
28030103	1	CLAMP HOSE GEAR P5/4-S1.5"6724
285538	1	BALL VALVE 3/4" BSP
320047	1	FITT.DK CAPNUT 1/2" BSP
320084	1	FITT.DK NUT 1/2" BSP
320095	1	FITT.DK NUT 1" BSP
320106	1	FITT.DK CAPNUT 1" BSP
320283	1	FITT.DK NUT 3/4"BSP
320795	1	FITT.DK NUT 1-1/2" BSP JAMB
320821	1	FITT.DK NUT 1-1/2" BSP
322088	1	NUT LARGE F.SCF BODY
322216	1	SCF HOUSING (THREADED)F.GROVE
322217	1	SCF TOP (THREADED) W/GROVE
330072	1	O-RING D53.5/D45.5X4
330212	1	O-RING D19/D14X2.4 F.1/2"NUT
330326	1	O-RING D30/D24X2 F.1"NUT
330341	1	FITT.DK HB 1" F. 1" NUT
330595	1	O-RING D24.6/D20X2.1 -3/4"
330676	1	FITT.DK HB 3/8" F. 1/2" NUT
332286	1	FITT.DK HB 1/2" F. 3/4" NUT
333292	1	FITT.DK HB 1"O'RING F.1-1/2"
334059	1	FITT.DK EL 1" 110 DEG.F.1-1/2"
334123	1	FITT.DK HB 1-1/4"O-RNG F.1-1/2
334150	1	FITT.DK HB 1-1/4" 110 F.1-1/2"
334200	1	ORFICE 3MM FOR SCF RED
334201	1	ORFICE 4MM FOR SCF WHITE
334202	1	ORFICE 5MM FOR SCF BLACK
334203	1	ORFICE 6MM FOR SCF GREEN
390274	1	ORIFICE ID4.0/18/1.5
390542	1	PLUG WASHER FOR 3/4'CAP NUT
410185	1	BOLT HEX 8.8 DEL M6X16 A2
420567	1	BOLT HEX 8.8 DEL M8X30 FT
460143	1	NUT HEX M8 LOCK A2 DIN985
460261	1	NUT HEX M6X1 LOCK A2 DIN985
471125	1	WASHER, M6, Ø12/ 6.4X 1.6, SS
61027600	1	VALVE 1/2"BSP ASSY S5390
635397	1	SCREEN SCF 80 MESH
635677	1	SCREEN SCF 100 MESH
635681	1	SCREEN SCF 50 MESH
722971	1	SAFETY VALVE SCF 217PSI(15BAR)
724891	1	SAFETY VALVE SCF 25 BAR
725679	1	SCF ASSY.50 W/THREADED TOP CAP
725680	1	SCF ASSY.80 W/THREADED TOP CAP
725681	1	SCF ASSY.100 W/THREADED CAP
725995	1	BAG FOR SCF
727596	1	SCF HOUSING COMPLETE
728557	1	CONE F.SCF RED
92702103	1	HOSE R X1/2" X300PSI WP X0012"
92712403	1	HOSE R X1" X300PSI WP X0012"

WWW.ROLTRONIK.PL

parts-n°	order qty	description
92734403	1	HOSE R X5/4" X200PSI WP X0012"

WWW.ROLTRONIK.PL

HARDI	**Agroparts: www.HARDI-INTERNATIONAL.com**	
	TOP SUCTION ASSEMBLY-SCREW CAP B0660-HIN, 01:01:16	Page 0 Date 16.03.2016 13:34

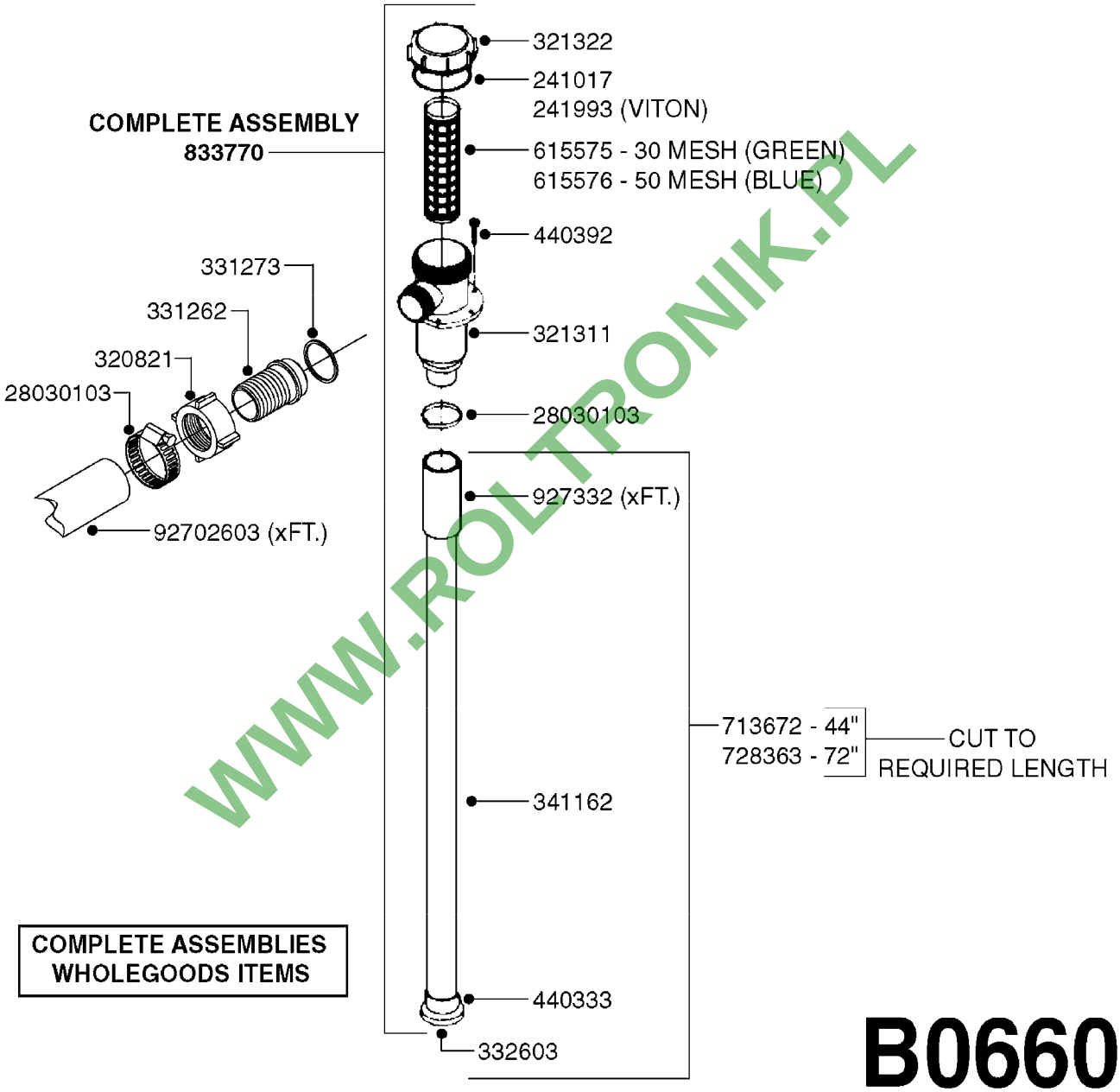

B0660

WWW.ROLTRONIK.PL

TOP SUCTION ASSEMBLY-SCREW CAP
B0660-HIN, 01:01:16

Date 16.03.2016 13:34

parts-n°	order qty	description
241017	1	O-RING D74,5X3 NITRIL
241993	1	O-RING 74.5 X 3MM VIT/241017
320821	1	FITT.DK NUT 1-1/2" BSP
321311	1	FILTER BODY S 80 X 4
321322	1	SCREW CAP F. S80 X 4
331262	1	FITT.DK HB 1-1/2" F. 1-1/2"NUT
331273	1	O-RING D44/D38X2 F.1-1/2"
332603	1	CAP F. SUCTION TUBE
341162	1	SUCTION TUBE F.650
440333	1	SCREW 3.5 X 9.5 SS
440392	1	SCREW 6.3 X 25.0 DIN7981C TORX
615575	1	FILTER F.TOP SUCT.30 MESH GRN.
615576	1	FILTER F.TOP SUCT.50 MESH BLUE
713672	1	SUCTION TUBE L=44"
728363	1	SUCTION TUBE ASSY.L=72"
833770	1	TOP SUCTION KIT 300/500
927332	1	HOSE R X 28BAR X 40MM X 0012"
28030103	1	CLAMP HOSE GEAR P5/4-S1.5"6724
92702603	1	HOSE PVC SUCT GRAY 1-1/2"

WWW.ROLTRONIK.PL

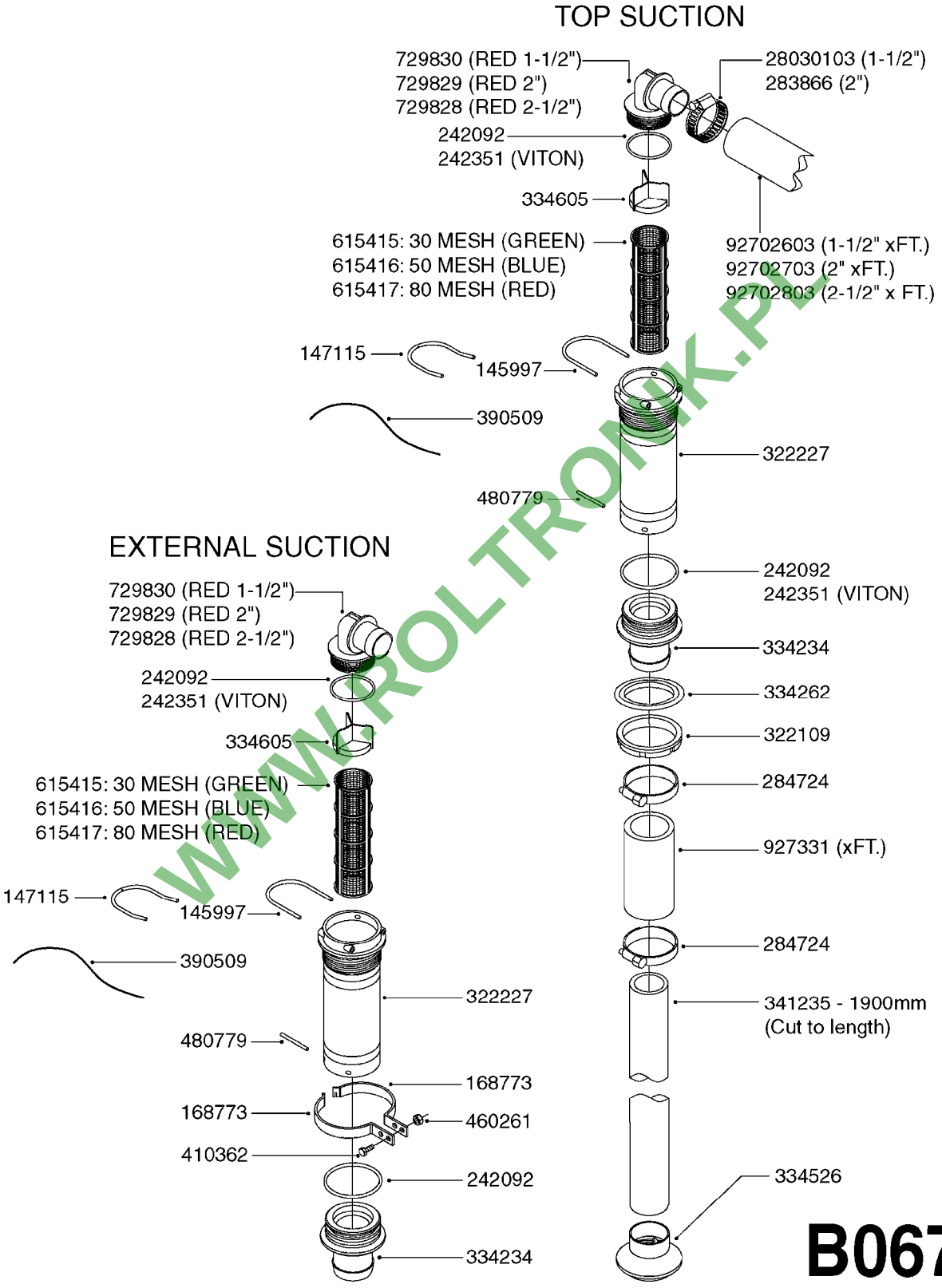

WWW.ROLTRONIK.PL

TOP SUCTION ASSEMBLY-S93 2"
B0670-HIN, 01:01:16

parts-n°	order qty	description
145997	1	FITT.DK S-93 FORK
147115	1	FITT.DK S-93 FORK SPECIAL
168773	1	MOUNT BRACKET F.S93 HOUSING
242092	1	O-RING D69.5X3 (Use-242351)
242351	1	O-RING D69.5X3.0 VITON F.S-93
283866	1	CLAMP HOSE SCREW TYPE 2"DELTA
284724	1	CLAMP HOSE GEAR D52-70
322109	1	FITT.DK S-93 BULKHEAD NUT
322227	1	HOUSING F.FILTER S-93 2"
334234	1	FITT.DK S-93 STR.2" RUBBER
334262	1	GASKET F.S-93 BULKHEAD
334526	1	FOOT F.SUCTION TUBE 2"
334605	1	VANE F.TOP SUCTION FILTER
341235	1	TUBE, SUCTION-2", L=1900MM
390509	1	*STRING POLYESTER D1 X 325MM
410362	1	BOLT HEX 8.8 SS M6X20 FT
460261	1	NUT HEX M6X1 LOCK A2 DIN985
480779	1	PIN D5X55 SPLIT
615415	1	FILTER ELEM.S93,30 MESH-GREEN
615416	1	FILTER ELEM.S93,50 MESH-BLUE
615417	1	FILTER ELEM.S93,80 MESH-RED
729828	1	FITT.DK S-93 ELB 2-1/2" RED
729829	1	FITT.DK S-93 ELB 2 RED
729830	1	FITT.DK S-93 ELB 1-1/2" 90 RED
927331	1	HOSE R X 28 BAR X 50MM
28030103	1	CLAMP HOSE GEAR P5/4-S1.5"6724
92702603	1	HOSE PVC SUCT GRAY 1-1/2"
92702703	1	HOSE PVC SUCT GRAY 2"
92702803	1	HOSE PVC SUCT GRAY 2.5"

WWW.ROLTRONIK.PL

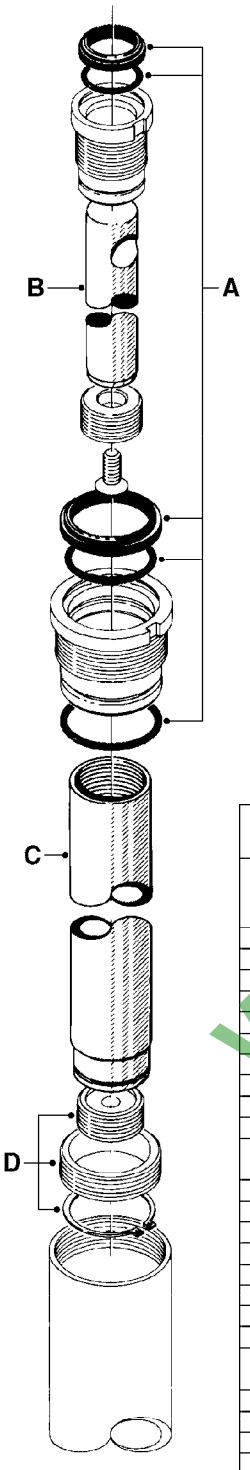

MULTI-STAGE CYLINDER

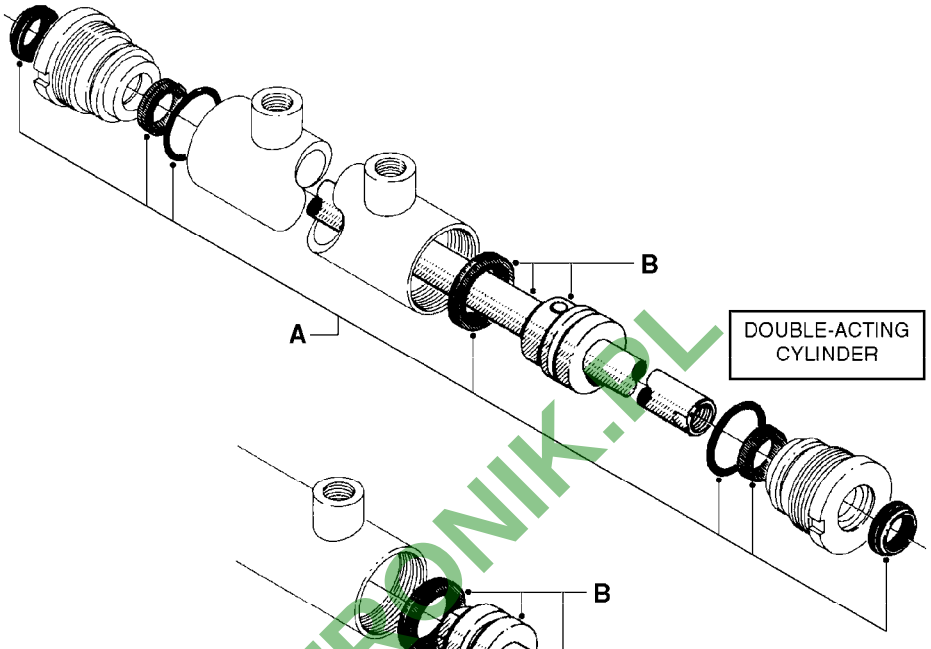

DOUBLE-ACTING CYLINDER

Check cylinder barrel for stamped part number.

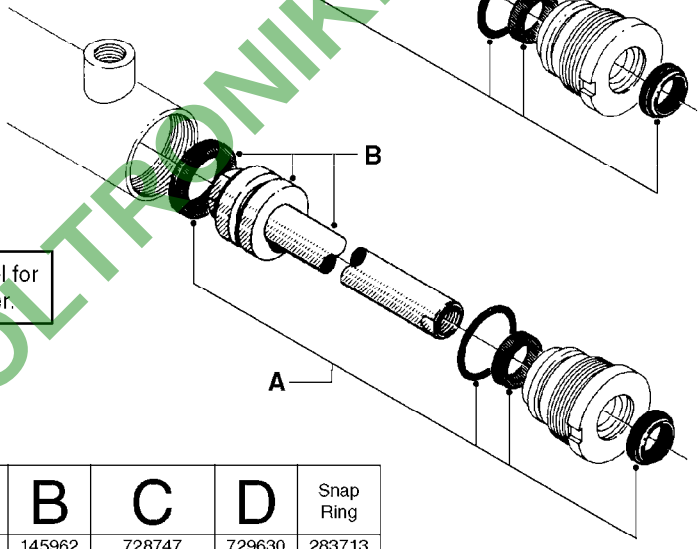

SINGLE-ACTING CYLINDER

After 1-8-89	Before 1-8-89		A	B	C	D	Snap Ring
		781001	750211	145962	728747	729630	283713
781021	781002		750212	726137			
781003	781003		750212	726138			
		781004	750213	145963	728735	729631	283724
781023	781005		750214	726139			
		781006	750211	145964	159165	729632	283713
781023	781007		750214	726139			
781008	781008		750212	726140			
		781010	750211	145964	159166	729632	283713
		781011	755415	729729	729730	729635	283800
		781012	750238	614624	614625-Ø60 614626-Ø80	729633	283843
781013	781013		750239	726141			
781022	781014		750212	726137			
781016			750212	726137			
781020			750252			728688	
		781032	750213	146538	150325	729634	283724
		781034	750211	147076	151291	729630	283713
		781036	755415	615181	615180	729635	283800
		781040	750213	146732	151286	729631	283724
		781042	750254	615248	615249-Ø60 615250-Ø80	729637	283800 283843
781046			750255	730938			
781050			750255	730939			
781056			750255	730939			
781057			750255	730938			
781086			750212	726137			

WWW.ROLTRONIK.PL

C0010

parts-nº	order qty	description
145962	1	VASTAGO PISTON D. 25 X 675
145963	1	PISTON ROD 30 X 768.5
145964	1	PISTON ROD 25 X 575
146538	1	PISTON ROD Ø60/50/30-1700
146732	1	CYLINDER ROD F. 781040 HYD CYL
147076	1	PISTON ROD 25 X 725
150325	1	INTER.SHAFT Ø50/40 L=930
151286	1	INTER. SHAFT F.781040 HYD CYL
151291	1	INTER.SHAFT Ø40/30 L=675.5
159165	1	INTER. SHAFT F. 781006 HYD CYL
159166	1	INTER. SHAFT F.781010 HYD CYL
283713	1	SNAP-RING OUTER 38X1.75
283724	1	SNAP-RING OUTER 48X1.75
283800	1	SNAP-RING 58X2
283843	1	SNAP-RING 78X2.5
614624	1	PISTON ROD D40X865
614625	1	PIPE INTERMEDIA D60X785
614626	1	PIPE INTERMEDIA D80X769
615180	1	INTER.SHAFT Ø60/50 L=918
615181	1	PISTON ROD Ø70/60/40-1687
615248	1	PISTON ROD Ø90/80/60/40-2250
615249	1	PISTON ROD Ø60/50 L=853
615250	1	PISTON ROD Ø80/70 L=829
726137	1	PISTON ROD /PISTON PACKED
726138	1	PISTON ROD /PISTON PACKED
726139	1	PISTON ROD /PISTON PACKED
726140	1	PISTON ROD /PISTON PACKED
726141	1	PISTON ROD /PISTON PACKED
728735	1	CYLINDER TUBE W.STOP RING
728688	1	PISTON ROD/PISTON 50/30-300
728747	1	INNER CYL.W.STOP RING 781001
729630	1	PISTON RINGS F.781001,781034
729631	1	PISTON RINGS F.781004,781040
729632	1	PISTON RINGS F.781006,781010
729633	1	PISTON RINGS F.781012
729634	1	PISTON RINGS F.781032
729635	1	PISTON RINGS F.781036
729637	1	PISTON RINGS F.781042
729729	1	PISTON ROD ASSY. 40 x 760MM
729730	1	PISTON ROD W/SEAL & RING
730938	1	PISTON ROD ASSY. F.781046/57
730939	1	PISTON ROD ASSY. F. 781050/56
750211	1	SEAL KIT F/781001 & 781006
750212	1	SEAL KIT F.40/20 CYLINDER
750213	1	SEAL KIT F.60/50/30 CYLINDER
750214	1	SEAL KIT F.HY CYL.
750238	1	PACKING SET FOR HY CYL. 781012
750239	1	PACKING SET FOR HY CYL. 781013
750252	1	SEAL KIT F.HY CYL.781020
750254	1	SEAL KIT F.HY CYL.781042
750255	1	SEAL KIT F.40/22 CYLINDER
755415	1	SEAL KIT F.HY CYL.781011
781001	1	CYL.TELESCOPING Ø50/40/25_1100
781002	1	DOUBLE CYLINDER D 40/20-300
781003	1	CYLINDER 40/20 L=180
781004	1	CYLINDER DOUB. D70/50/30-1300
781005	1	DOUBLE CYLINDER D 50/25-300
781006	1	CYLINDER DOUB.D50/40/25-900
781007	1	CYLINDER LY/TY
781008	1	CYLINDER D40/20-120
781010	1	CYLINDER TELESC.50/40/25-700

WWW.PDTRONIK.PL

parts-n°	order qty	description
781011	1	CYLINDER TELESC.70/60/40
781012	1	CYLINDER TEL.90/80/60/40-2100
781013	1	CYLINDER D40/20X310 THROUGH
781014	1	CYLINDER 40/20 300MM
781016	1	CYLINDER DOU.W/SIDE DET.D40/20
781020	1	CYL DOUB D50/30-300 78121600
781021	1	DOUBLE CYLINDER D 40/20-300
781022	1	CYLINDER 40/20 300MM
781023	1	DOUBLE CYLINDER D 50/25-300
781032	1	CYLINDER TELESC.60/50/30-1700
781034	1	HY. CYLINDER D50/40/25 - 1200
781036	1	CYLINDER TELESC.70/60/40-1687
781040	1	CYLINDER 60/50/30 1100MM
781042	1	CYLINDER TEL.90/80/60/40-2250
781046	1	CYLINDER D40/22-300
781050	1	CYLINDER D40/22-300 EXT.THREAD
781056	1	CYLINDER 40/22X300MM
781057	1	CYLINDER D40/22X300MM
781086	1	CYLINDER DOUBLE Ø40/20-180

WWW.ROLTRONIK.PL

Check cylinder barrel for stamped part number.

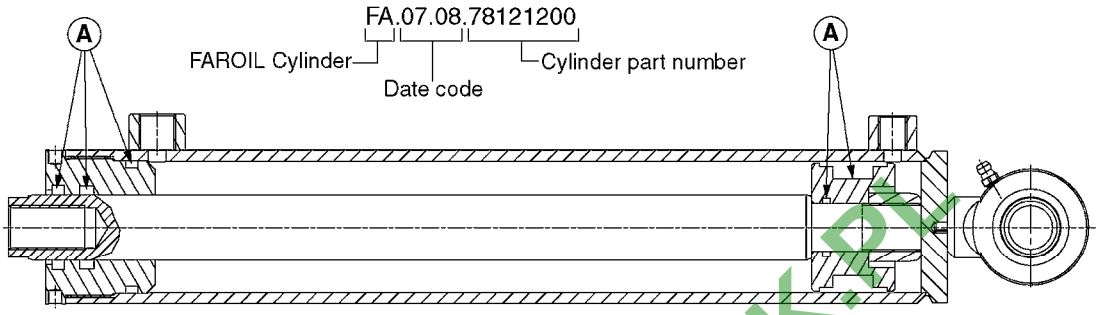

FAROIL cylinders directly replace the cylinders in the chart below. Seal kits **(A)** are for FAROIL cylinders only. Seal kits for replaced cylinders can be found on pages C0010 and C0020.

FAROIL Cylinder #	Replaces Cylinder #	FAROIL Seal Kit (A)
78120000	781001	75075900
78120100	781011	75076000
78120200	781034	75075900
78120300	781040	75076100
78120500	781093	75074600
78120600 (LH)	781096*	28117300
78120700 (LH)	781097*	28117300
78120800	781100	75075400
78121000	-	75075500
78121200	781107	75074500
78121400	781109	75075200
78121600	781111	75074500
78121800	781113	75074400
78122000	781115	75074300
78122100	781116	75074400
78122300	781118	75074300
78122400	781119	75074300
78122600	781121	75075000
78122700	781122	75075000

FAROIL Cylinder #	Replaces Cylinder #	FAROIL Seal Kit (A)
78122800	781123	75075000
78122900	781124	75075000
78123100	781126	75074300
78123200	781127	75074300
78123300 (LH)	78115000*	75075500
78124100 (RH)	78115100*	75075500
78124200**	781139	75074800
78124300 (LH)	781141*	28117300
78124600	781115	75074300
78125100 (RH)	78115000*	75075500
78125300 (LH)	78115100*	75075500
78125500 (RH)	781096*	28117300
78125600 (RH)	781097*	28117300
78125700 (RH)	781141*	28117300
78126000	781132	75074900
78126400	781090	75076500
78128000	78120500	75074600
78128800	78121200	75075200

*Replaced by separate left and right cylinders.
** Only available as 72531000 (78124200 with fittings).

WWW.POLTRONIK.PL

parts-n°	order qty	description
781001	1	CYL.TELESCOPING Ø50/40/25_1100
781011	1	CYLINDER TELESC.70/60/40
781034	1	HY. CYLINDER D50/40/25 - 1200
781040	1	CYLINDER 60/50/30 1100MM
781090	1	CYL DBLD32/16-200W
781093	1	CYLINDER FOLD SPC D60/30 L=300
781096	1	CYLINDER 60/25 X 662 NAV PAR
781097	1	CYLINDER 60/25 X 725 CM PAR
781100	1	CYLINDER DOUBLE 60/30-300
781107	1	DOBCYL50/30-500/M24X2 78121200
781109	1	DOUBLE CYLINDER D 50/30-300
781111	1	CYL DOUB D50/30-300 78121600
781113	1	DOUBLE CYLINDER D 50/25-300
781115	1	DOUBLE CYLINDER D 40/20-300
781116	1	CYLINDER DOUBLE D50/25-298
781118	1	CYLINDER 40/20 L=180
781119	1	DOUBLE CYLINDER D 40/20-300
781121	1	CYLINDER D40/22-300 BLACK
781122	1	CYLINDER 40/22X300MM RED
781123	1	CYLINDER D40/22-300 BLACK
781124	1	CYLINDER 40/22X300MM RED
781126	1	CYLINDER D40/20-120
781127	1	CYLINDER D40/20-120
781132	1	CYL.STAB CM1200 04 78126000
781139	1	CYLINDER D25/12-50
781141	1	CYLINDER 60/25 X 635 DELTA PAR
28117300	1	SEAL KIT 78120600/07/43
72531000	1	CYL. D25/12-50/78124200 W/FITT
75074300	1	SEALKIT78122000/23-25/30-32/46
75074400	1	SEAL KIT 78121800/21/44
75074500	1	SEALKIT78121100-13/15/16/36/48
75074600	1	SEAL KIT 78120500/49
75074800	1	SEAL KIT 78123400/42
75074900	1	SEAL KIT 78123700
75075000	1	SEAL KIT 78122600/27/28/29
75075200	1	SEAL KIT 78120900/14/50
75075400	1	SEAL KIT 78120800
75075500	1	SEAL KIT 78121000/33/41/51/53
75075900	1	SEAL KIT FOR 78120000 & 78120200
75076000	1	SEAL KIT 78120100
75076100	1	SEAL KIT 78120300
75076500	1	SEAL KIT 78126400
78115000	1	DBL CYL D70/40-320 AIRING
78115100	1	CYL DOB.D70/40-265 AIR INLET R
78120000	1	CYL.TELESCOPING Ø50/40/25_1100
78120100	1	CYLINDER TELESC.70/60/40
78120200	1	HY. CYLINDER D50/40/25 - 1200
78120300	1	CYLINDER 60/50/30 1100MM
78120500	1	CYLINDER FOLD SPC D60/30 L=300
		NLA - REPLACED BY 78128000
78120600	1	CYLINDER 60/25 X 662 NAV PAR L
78120700	1	CYLINDER 60/25 X 725 CM PAR L
78120800	1	CYLINDER DOUBLE 60/30-300
78121000	1	CYLINDER DOUBLE D70/40-400
78121200	1	CYLINDER, D50/30-500
78121400	1	CYLINDER DOUBLE D50/30-300
78121600	1	CYLINDER DOUBLE D50/30-300
78121800	1	CYLINDER D50/25 L=300
78122000	1	CYLINDER DOUBLE Ø40/20-300 0°
78122100	1	CYLINDER DOUBLE D50/25-298
78122300	1	DOB.CYL.D40/20_180

WWW.PCZ-TRONIK.PL

parts-n°	order qty	description
78122400	1	DOUBLE CYLINDER D 40/20-300
78122600	1	CYLINDER D40/22-300 BLACK
78122700	1	CYLINDER 40/22X300MM RED
78122800	1	CYLINDER D40/22-300 BLACK
78122900	1	CYLINDER 40/22X300MM RED
78123100	1	CYLINDER D40/20-120
78123200	1	CYLINDER D40/20-120
78123300	1	DBL CYL D70/40-320 AIR INLET L
78124100	1	CYL DOB.D70/40-265 AIR INLET R
78124200	1	CYLINDER D25/12-50
78124300	1	CYLINDER 60/25 X 635 DELTA L
78124600	1	CYLINDER DOUBLE Ø40/20-300 90°
78125100	1	DBL CYL D70/40-320 AIR INLET R
78125300	1	CYL DOB.D70/40-265 AIR INLET L
78125500	1	CYLINDER 60/25 X 662 NAV PAR R
78125600	1	CYLINDER 60/25 X 725 CM PAR R
78125700	1	CYLINDER 60/25 X 635 DELTA R
78126000	1	CYLINDER,DAMPNER,LOCKING
78126400	1	CYLINDER DBLE D32/16-200 W.STP
78128000	1	CYLINDER DOUB. D60/30 L=300 09
78128800	1	CYLINDER, D50/30-500

WWW.ROLTRONIK.PL

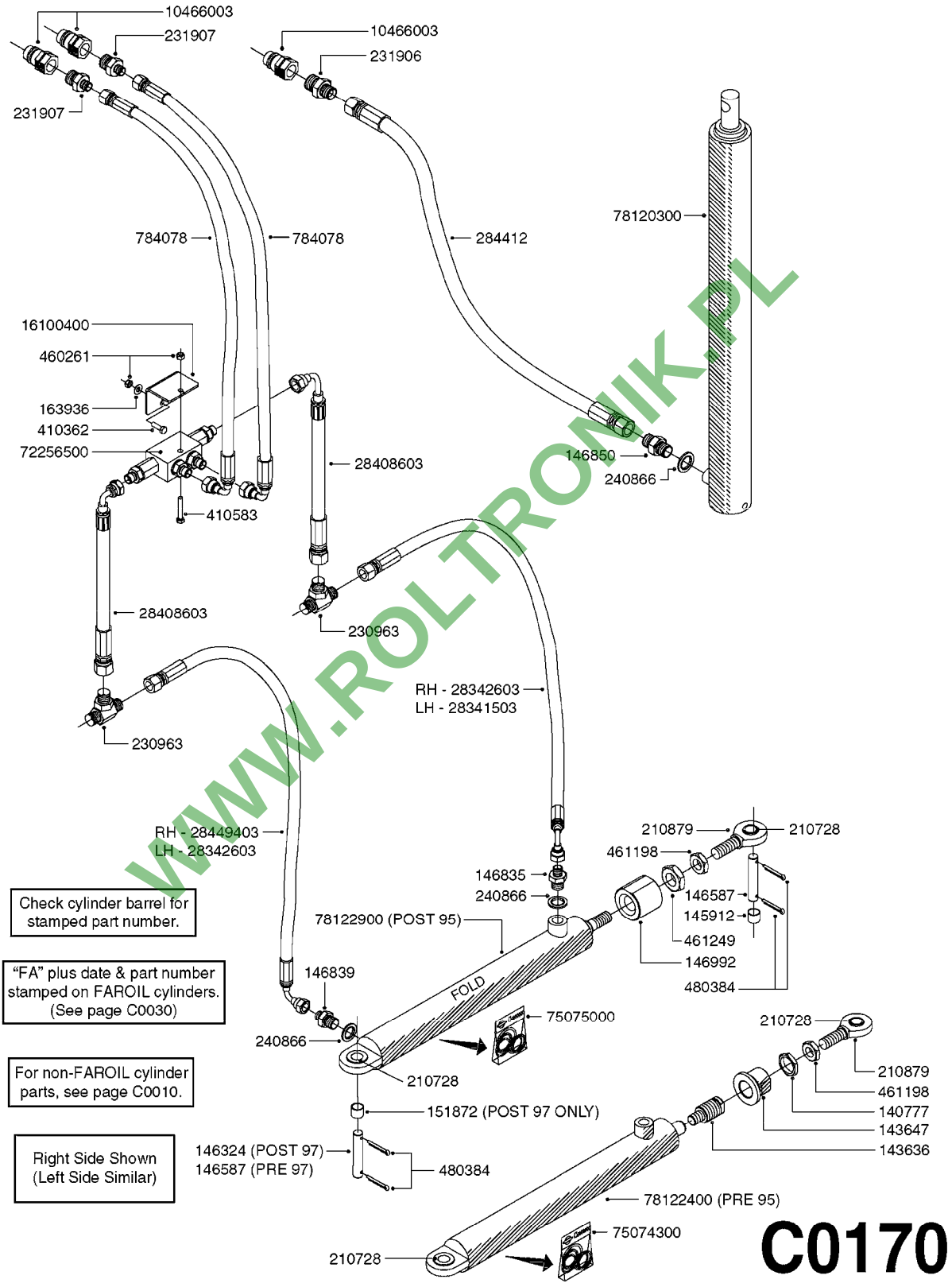

WWW.ROLTRONIK.PL

C0170

parts-n°	order qty	description
140777	1	NUT HEX 3/4" BSP JAMB
143636	1	THREADED INSERT F.CYLINDER END
143647	1	COLLAR F.THREAD.ROD EXTENTON
145912	1	BUSHING D19.8/D17.0X7MM
146324	1	SHAFT D16.8 L102/2 X 5
146587	1	PIN D16.8 X 65
146835	1	HEX NIPPLE 1/4" - 3/8" BSP
146839	1	HEX NIPPLE 1/4"X3/8" BSP 0.7MM
146850	1	HEX NIPPLE 3/8"x3/8" - 1.8mm
146992	1	BUSHING F.CYLINDER
151872	1	BUSHING D22.0/18.0 10MM
163936	1	WASHER D15/D6.2X1
210728	1	BEARING F.LINK HEAD M17
210879	1	LINK HEAD M16 x D17
230963	1	TEE 1/4"M X 1/4"M X 1/4"M BSP
231906	1	HEX NIPPLE 3/8"BSP X 1/2"NPT
231907	1	HEX NIPPLE 1/4"BSP X 1/2"NPT
240866	1	DOWTYSEAL 3/8"
284412	1	HOSE HY 3/8" X 315" STR+STR
410362	1	BOLT HEX 8.8 SS M6X20 FT
410583	1	BOLT HEX 8.8 DEL M6X40
460261	1	NUT HEX M6X1 LOCK A2 DIN985
461198	1	NUT HEX M16X2 JAMB
461249	1	NUT HEX M22X1.5
480384	1	PIN COTTER 3/16 x 1-1/2"
784078	1	HOSE HY X 1/4 X 417.33"STR+ELB
10466003	1	COUPLER PIONEER 8010-04 1/2NPT
16100400	1	PLATE 3 X 60 X 91 HY BLOCK MT
28341503	1	HOSE HY X1/4X078.75"STR+ELB
28342603	1	HOSE HY X1/4X066.93"STR+ELB
28408603	1	HOSE HY X1/4X008.00"STR+ELB
28449403	1	HOSE HY X1/4X057.08"STR+ELB
72256500	1	DOUB.PILOT STEERED COUNT.VALVE
75074300	1	SEALKIT78122000/23-25/30-32/46
75075000	1	SEAL KIT 78122600/27/28/29
78120300	1	CYLINDER 60/50/30 1100MM
78122400	1	DOUBLE CYLINDER D 40/20-300
78122900	1	CYLINDER 40/22X300MM RED

WWW.SO-TRONIK.PL

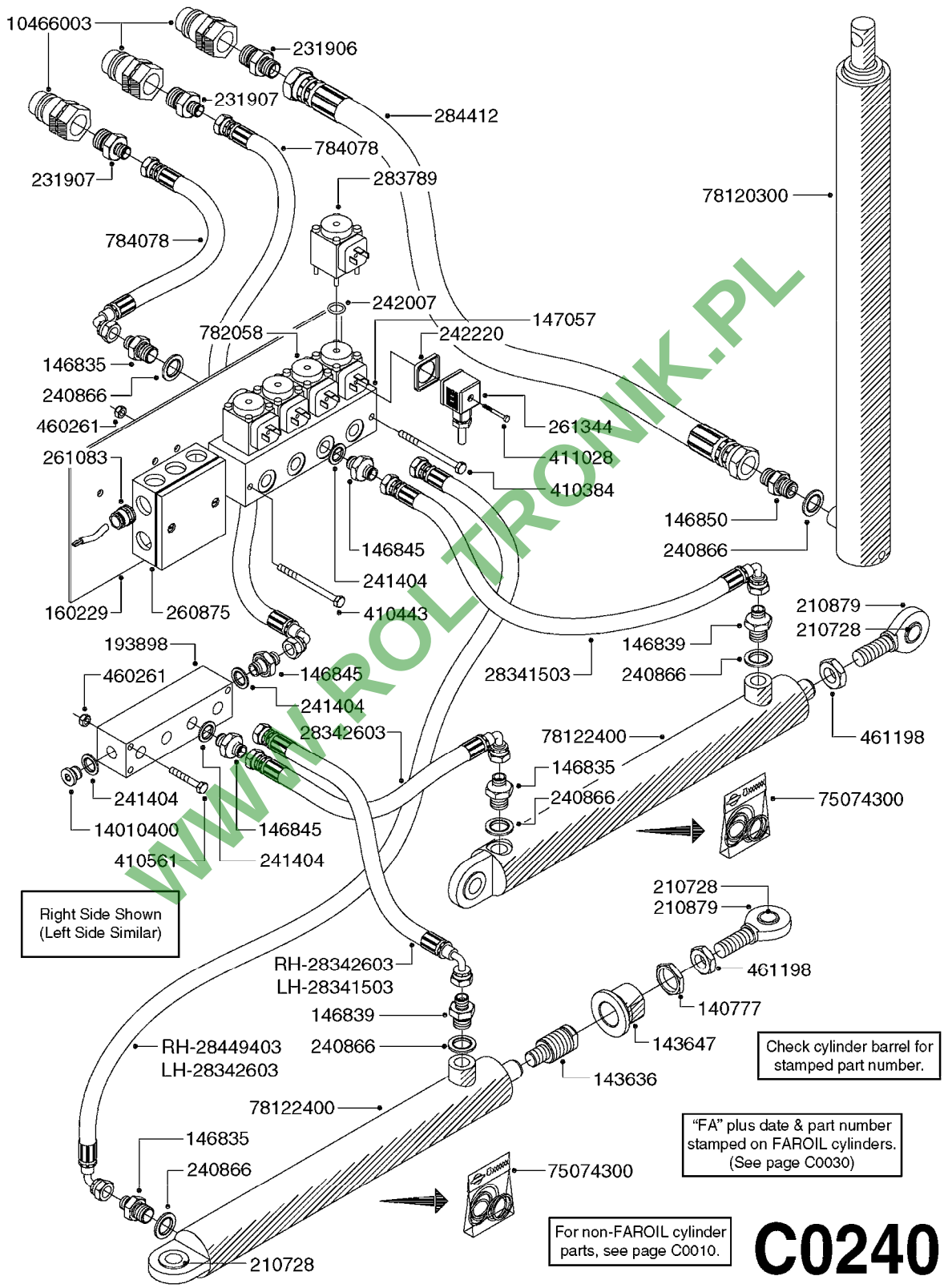

C0240

WWW.ROLTRONIK.PL

parts-n°	order qty	description
140777	1	NUT HEX 3/4" BSP JAMB
143636	1	THREADED INSERT F.CYLINDER END
143647	1	COLLAR F.THREAD.ROD EXTENTON
146835	1	HEX NIPPLE 1/4" - 3/8" BSP
146839	1	HEX NIPPLE 1/4"X3/8" BSP 0.7MM
146845	1	HEX NIPPLE 1/4"X1/4"
146850	1	HEX NIPPLE 3/8"x3/8" - 1.8mm
147057	1	MANIFOLD BLOCK F.HYD/4
160229	1	MOUNT PLATE F.HYD. MANIFOLD
193898	1	HYD. DISTRIBUTOR BLOCK
210728	1	BEARING F.LINK HEAD M17
210879	1	LINK HEAD M16 x D17
231906	1	HEX NIPPLE 3/8"BSP X 1/2"NPT
231907	1	HEX NIPPLE 1/4"BSP X 1/2"NPT
240866	1	DOWTYSEAL 3/8"
241404	1	DOWTY SEAL 1/4"
242007	1	O-RING D9.1X1.6
242220	1	GASKET F. HIRSMANN PLUG
260875	1	JUNCTION BOX
261083	1	GROMMET (PLASTIC)F.ELEC.CABLE
261344	1	HIRSCHMANN PLUG B
283789	1	SOLENOID F.HYD. VALVE
284412	1	HOSE HY 3/8" X 315" STR+STR
410384	1	BOLT HEX 8.8 DEL M6X65
410443	1	BOLT HEX 8.8 DEL M6X70
410561	1	BOLT HEX 8.8 DEL M6X50 FT
411028	1	SCREW M3X30 F.HIRSMANN
460261	1	NUT HEX M6X1 LOCK A2 DIN985
461198	1	NUT HEX M16X2 JAMB
782058	1	HY VALVE
784078	1	HOSE HY X 1/4 X 417.33"STR+ELB
10466003	1	COUPLER PIONEER 8010-04 1/2NPT
14010400	1	PLUG 1/4" BSP
28341503	1	HOSE HY X1/4X078.75"STR+ELB
28342603	1	HOSE HY X1/4X066.93"STR+ELB
28449403	1	HOSE HY X1/4X057.08"STR+ELB
75074300	1	SEALKIT78122000/23-25/30-32/46
78120300	1	CYLINDER 60/50/30 1100MM
78122400	1	DOUBLE CYLINDER D 40/20-300

WWW.ROLTRONIK.PL

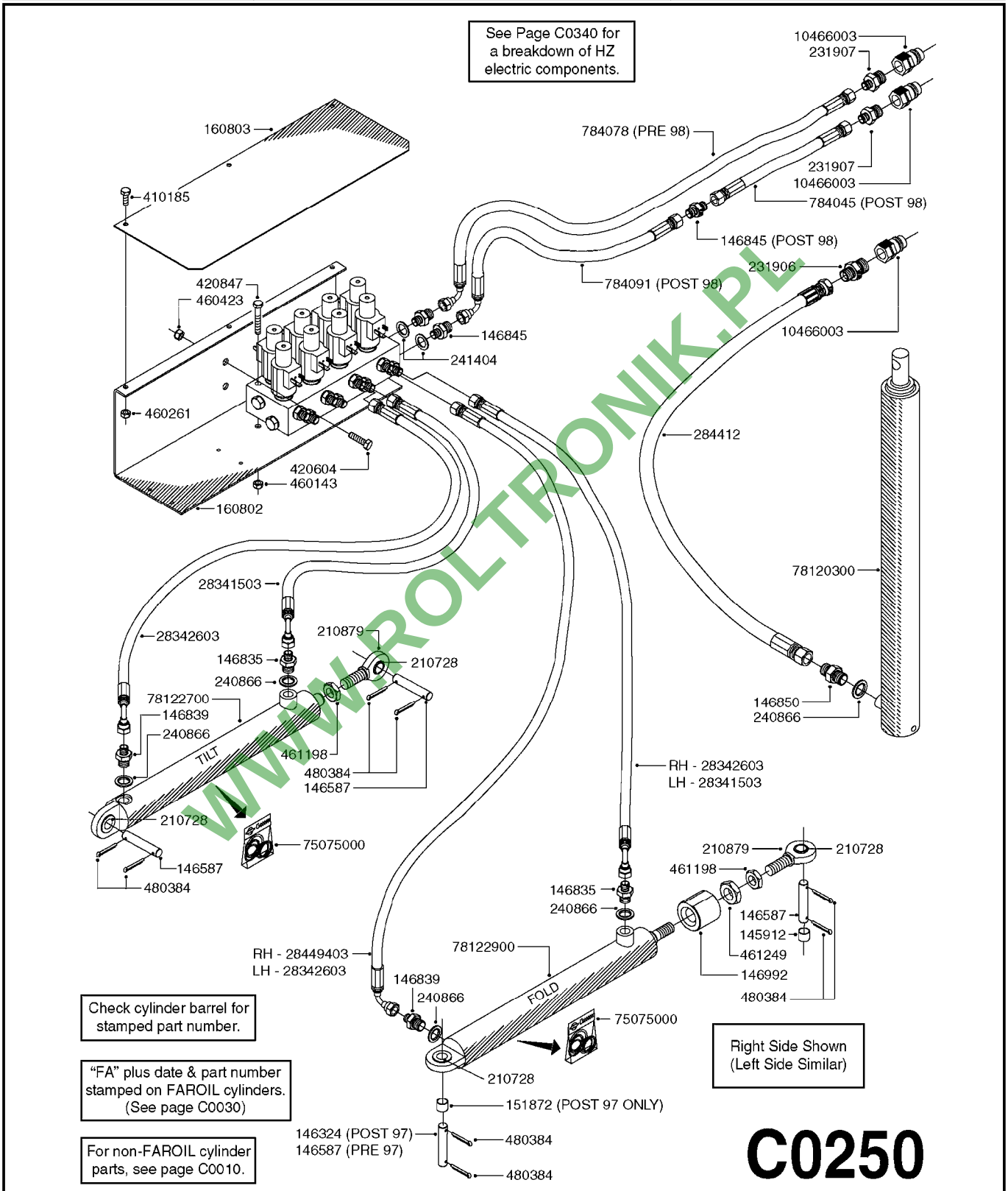

WWW.ROLTRONIK.PL

parts-n°	order qty	description
145912	1	BUSHING D19.8/D17.0X7MM
146324	1	SHAFT D16.8 L102/2 X 5
146587	1	PIN D16.8 X 65
146835	1	HEX NIPPLE 1/4" - 3/8" BSP
146839	1	HEX NIPPLE 1/4"X3/8" BSP 0.7MM
146845	1	HEX NIPPLE 1/4"X1/4"
146850	1	HEX NIPPLE 3/8"x3/8" - 1.8mm
146992	1	BUSHING F.CYLINDER
151872	1	BUSHING D22.0/18.0 10MM
160802	1	MOUNT PLATE F.HYD SOLENOID'HZ'
160803	1	COVER PLATE F.HYD SOLENOID'HZ'
210728	1	BEARING F.LINK HEAD M17
210879	1	LINK HEAD M16 x D17
231906	1	HEX NIPPLE 3/8"BSP X 1/2"NPT
231907	1	HEX NIPPLE 1/4"BSP X 1/2"NPT
240866	1	DOWTYSEAL 3/8"
241404	1	DOWTY SEAL 1/4"
284412	1	HOSE HY 3/8" X 315" STR+STR
410185	1	BOLT HEX 8.8 DEL M6X16 A2
420604	1	BOLT HEX 8.8 DEL M10X25 FT DIN933
420847	1	BOLT HEX 8.8 DEL M8X85
460143	1	NUT HEX M8 LOCK A2 DIN985
460261	1	NUT HEX M6X1 LOCK A2 DIN985
460423	1	NUT HEX M10X1.5 LOCK
461198	1	NUT HEX M16X2 JAMB
461249	1	NUT HEX M22X1.5
480384	1	PIN COTTER 3/16 x 1-1/2"
784045	1	HOSE HY X 1/4 X 157.50"STR+STR
784078	1	HOSE HY X 1/4 X 417.33"STR+ELB
784091	1	HOSE HY X 1/4 X 295.25"STR+ELB
10466003	1	COUPLER PIONEER 8010-04 1/2NPT
28341503	1	HOSE HY X1/4X078.75"STR+ELB
28342603	1	HOSE HY X1/4X066.93"STR+ELB
28449403	1	HOSE HY X1/4X057.08"STR+ELB
75075000	1	SEAL KIT 78122600/27/28/29
78120300	1	CYLINDER 60/50/30 1100MM
78122700	1	CYLINDER 40/22X300MM RED
78122900	1	CYLINDER 40/22X300MM RED

WWW.ROL-TRONIK.PL

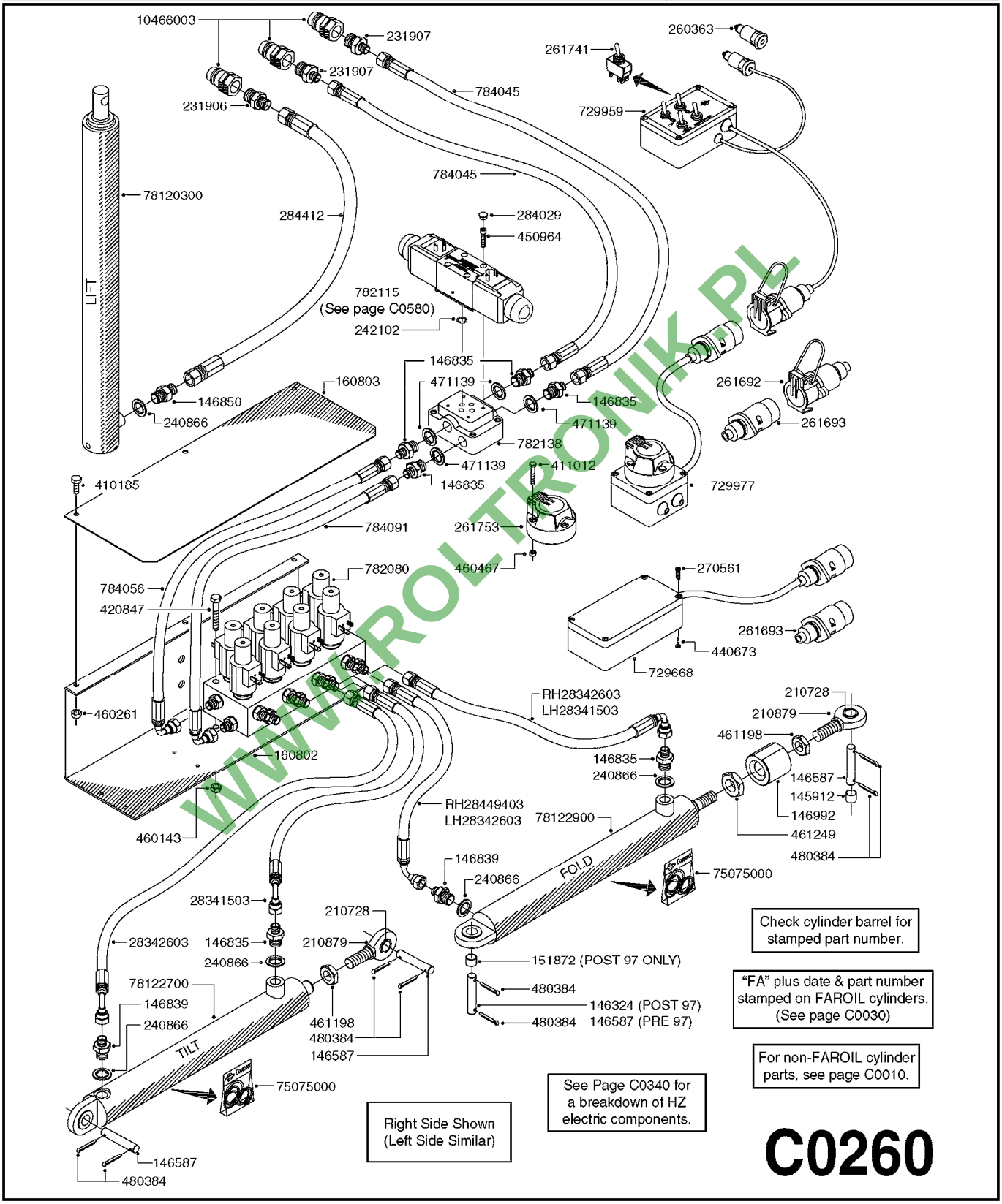

Check cylinder barrel for stamped part number.

"FA" plus date & part number stamped on FAROIL cylinders. (See page C0030)

For non-FAROIL cylinder parts, see page C0010.

See Page C0340 for a breakdown of HZ electric components.

Right Side Shown (Left Side Similar)

C0260

WWW.ROLTRONIK.PL

parts-nº	order qty	description
145912	1	BUSHING D19.8/D17.0X7MM
146324	1	SHAFT D16.8 L102/2 X 5
146587	1	PIN D16.8 X 65
146835	1	HEX NIPPLE 1/4" - 3/8" BSP
146839	1	HEX NIPPLE 1/4"X3/8" BSP 0.7MM
146850	1	HEX NIPPLE 3/8"x3/8" - 1.8mm
146992	1	BUSHING F.CYLINDER
151872	1	BUSHING D22.0/18.0 10MM
160802	1	MOUNT PLATE F.HYD SOLENOID'HZ'
160803	1	COVER PLATE F.HYD SOLENOID'HZ'
210728	1	BEARING F.LINK HEAD M17
210879	1	LINK HEAD M16 x D17
231906	1	HEX NIPPLE 3/8"BSP X 1/2"NPT
231907	1	HEX NIPPLE 1/4"BSP X 1/2"NPT
240866	1	DOWTYSEAL 3/8"
242102	1	O-RING Ø9.25X1.78 NITRIL 90SH
260363	1	PLUG 2 POLE 12V
261692	1	PLUG ELEC.7 POLE FEMALE F.CABL
261693	1	PLUG ELEC. 7 POLE MALE
261741	1	SWITCH 2 POLE 12V TOGGLE PRESS
261753	1	PLUG ELEC.7 POLE FEMALE F.BASE
270561	1	SCREW W/SPRING ASSY. (QTY 1)
284029	1	COVER PLUS D10.5/12.0X5.0
284412	1	HOSE HY 3/8" X 315" STR+STR
410185	1	BOLT HEX 8.8 DEL M6X16 A2
411012	1	SCREW M5X30 STAINLESS
420847	1	BOLT HEX 8.8 DEL M8X85
440673	1	SCREW F.PLASTIC 5X12 SS
450964	1	SCREW M5X30 F.CYLINDER
460143	1	NUT HEX M8 LOCK A2 DIN985
460261	1	NUT HEX M6X1 LOCK A2 DIN985
460467	1	NUT HEX M5 GALV.
461198	1	NUT HEX M16X2 JAMB
461249	1	NUT HEX M22X1.5
471139	1	WASHER D22/D17X1.5 BRASS
480384	1	PIN COTTER 3/16 x 1-1/2"
729668	1	DISTRIBUTION BOX, 4 FUNCTION
729959	1	CONTROL BOX DAH 4-FUNCTION
729977	1	DAH DIRECTIONAL VLV JUNC. BOX
782080	1	MANIFOLD BLOCK, 4 FUNCTION
782115	1	HY SOLENOID VALVE DH HYD
782138	1	HY-BLOCK 1-VALVE W LS-PORT
784045	1	HOSE HY X 1/4 X 157.50"STR+STR
784056	1	HOSE HY X 1/4 X 394.00'STR+ELB
784091	1	HOSE HY X 1/4 X 295.25"STR+ELB
10466003	1	COUPLER PIONEER 8010-04 1/2NPT
28341503	1	HOSE HY X1/4X078.75"STR+ELB
28342603	1	HOSE HY X1/4X066.93"STR+ELB
28449403	1	HOSE HY X1/4X057.08"STR+ELB
75075000	1	SEAL KIT 78122600/27/28/29
78120300	1	CYLINDER 60/50/30 1100MM
78122700	1	CYLINDER 40/22X300MM RED
78122900	1	CYLINDER 40/22X300MM RED

WWW.RC-TRONIK.PL

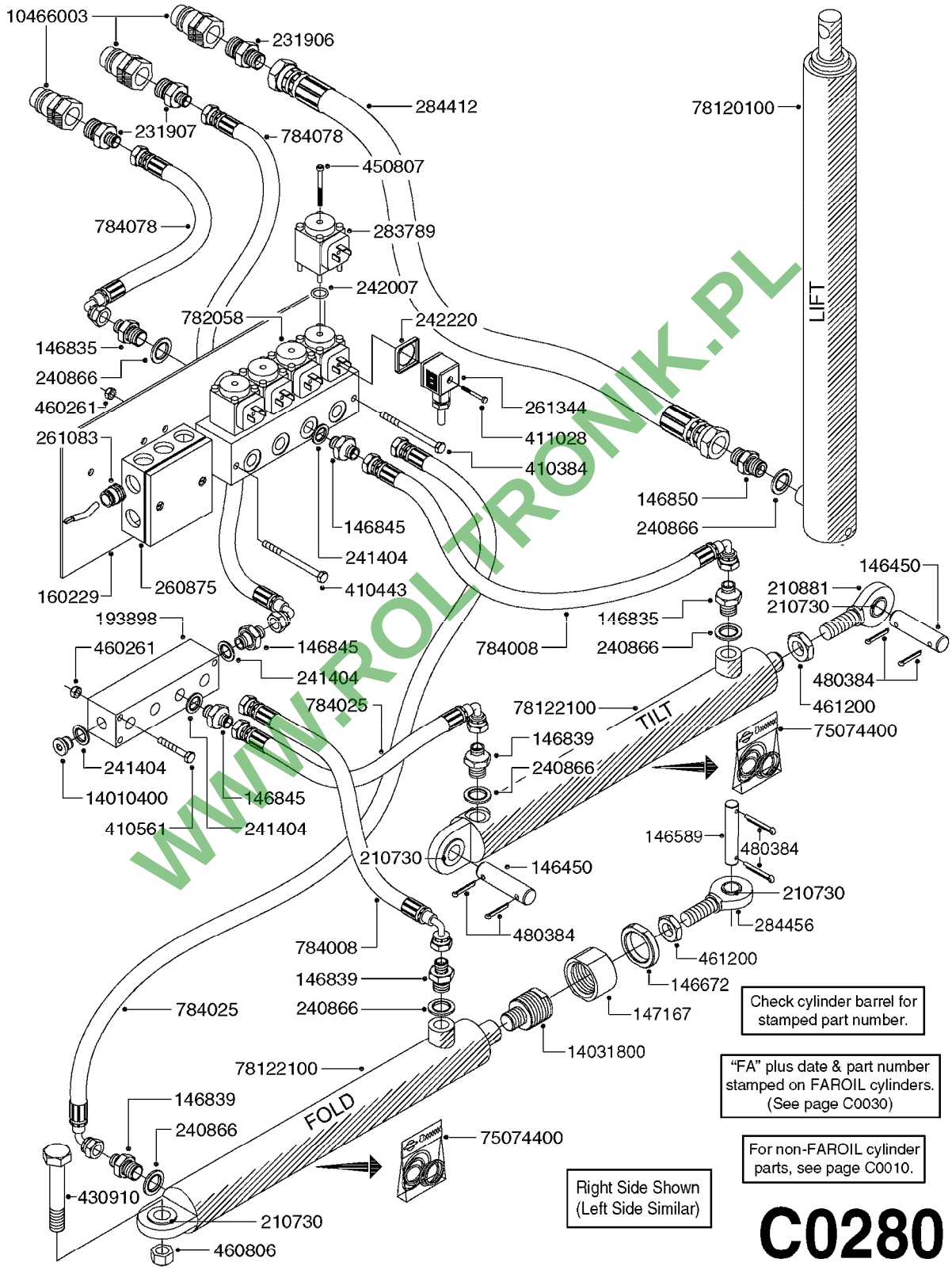

WWW.ROLTRONIK.PL

parts-nº	order qty	description
146450	1	PIN D19.8 X 75 WITH 2 X D5
146589	1	PIN D19.8 X 65
146672	1	NUT HEX LOCK F.ADJUSTER
146835	1	HEX NIPPLE 1/4" - 3/8" BSP
146839	1	HEX NIPPLE 1/4"X3/8" BSP 0.7MM
146845	1	HEX NIPPLE 1/4"X1/4"
146850	1	HEX NIPPLE 3/8"x3/8" - 1.8mm
147167	1	BUSHING D50/D36X45MM
160229	1	MOUNT PLATE F.HYD. MANIFOLD
193898	1	HYD. DISTRIBUTOR BLOCK
210730	1	BEARING F.LINK HEAD M20
210881	1	LINK HEAD GAR 20 DO
231906	1	HEX NIPPLE 3/8"BSP X 1/2"NPT
231907	1	HEX NIPPLE 1/4"BSP X 1/2"NPT
240866	1	DOWTYSEAL 3/8"
241404	1	DOWTY SEAL 1/4"
242007	1	O-RING D9.1X1.6
242220	1	GASKET F. HIRSMANN PLUG
260875	1	JUNCTION BOX
261083	1	GROMMET (PLASTIC)F.ELEC.CABLE
261344	1	HIRSCHMANN PLUG B
283789	1	SOLENOID F.HYD. VALVE
284412	1	HOSE HY 3/8" X 315" STR+STR
284456	1	LINK HEAD M20 X D20 L=30
410384	1	BOLT HEX 8.8 DEL M6X65
410443	1	BOLT HEX 8.8 DEL M6X70
410561	1	BOLT HEX 8.8 DEL M6X50 FT
411028	1	SCREW M3X30 F.HIRSMANN
430910	1	BOLT HEX 8.8 DEL M20X110
450807	1	SCREW M4X45 ALLEN
460261	1	NUT HEX M6X1 LOCK A2 DIN985
460806	1	NUT HEX M20X2.5 LOCK
461200	1	NUT HEX M20X1.5 JAMB.
480384	1	PIN COTTER 3/16 x 1-1/2"
782058	1	HY VALVE
784008	1	HOSE HY X 1/4" X 98.4"STR+ELB
784025	1	HOSE HY X 1/4" x 86.6"STR+ELB
784078	1	HOSE HY X 1/4 X 417.33"STR+ELB
10466003	1	COUPLER PIONEER 8010-04 1/2NPT
14010400	1	PLUG 1/4" BSP
14031800	1	ADAPTOR F.HY CYLINDER L=40
75074400	1	SEAL KIT 78121800/21/44
78120100	1	CYLINDER TELESC.70/60/40
78122100	1	CYLINDER DOUBLE D50/25-298

WWW.ROLTRONIK.PL

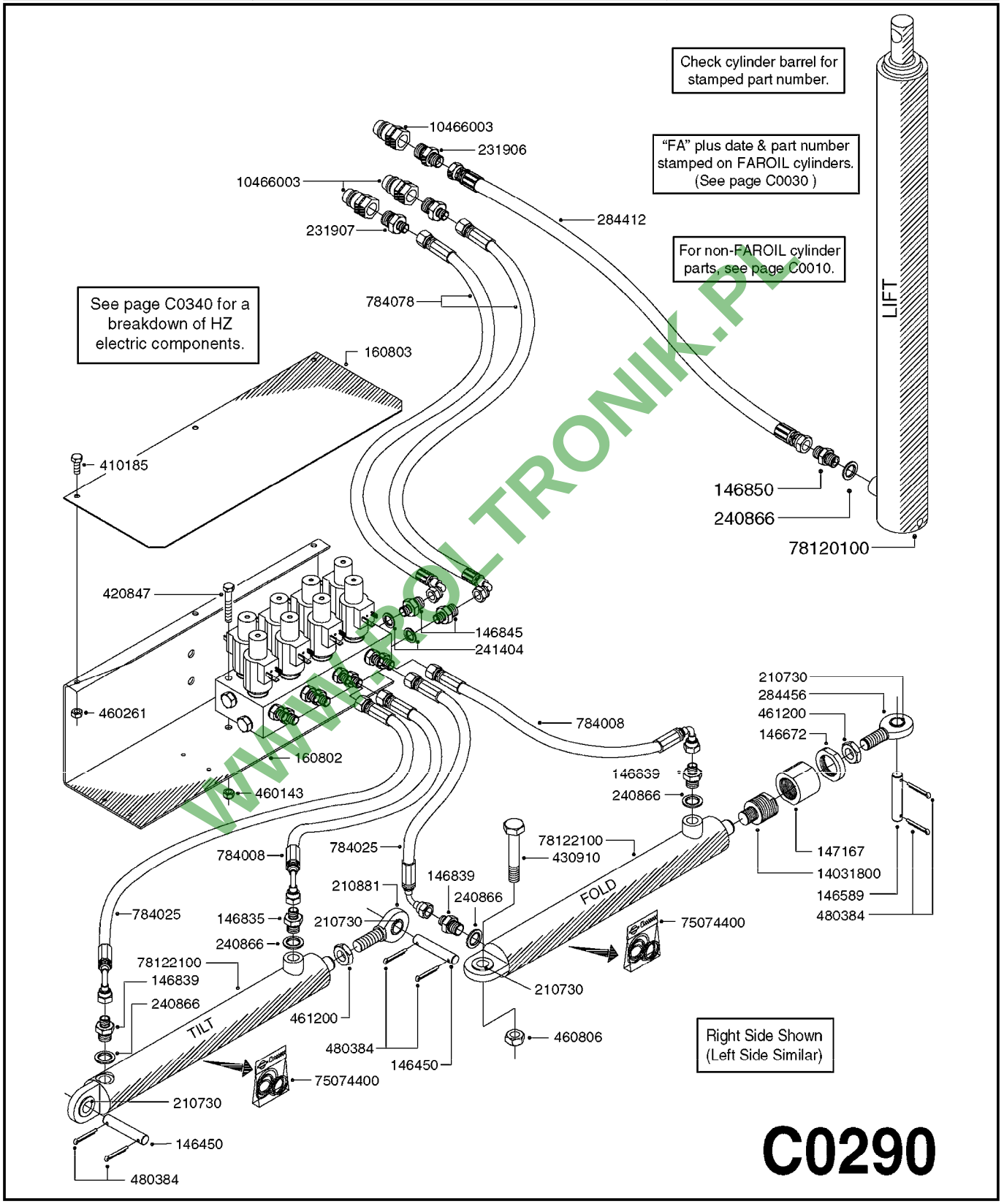

C0290

WWW.PROLTRONIK.PL

parts-n°	order qty	description
146450	1	PIN D19.8 X 75 WITH 2 X D5
146589	1	PIN D19.8 X 65
146672	1	NUT HEX LOCK F.ADJUSTER
146835	1	HEX NIPPLE 1/4" - 3/8" BSP
146839	1	HEX NIPPLE 1/4"X3/8" BSP 0.7MM
146845	1	HEX NIPPLE 1/4"X1/4"
146850	1	HEX NIPPLE 3/8"x3/8" - 1.8mm
147167	1	BUSHING D50/D36X45MM
160802	1	MOUNT PLATE F.HYD SOLENOID'HZ'
160803	1	COVER PLATE F.HYD SOLENOID'HZ'
210730	1	BEARING F.LINK HEAD M20
210881	1	LINK HEAD GAR 20 DO
231906	1	HEX NIPPLE 3/8"BSP X 1/2"NPT
231907	1	HEX NIPPLE 1/4"BSP X 1/2"NPT
240866	1	DOWTYSEAL 3/8"
241404	1	DOWTY SEAL 1/4"
284412	1	HOSE HY 3/8" X 315" STR+STR
284456	1	LINK HEAD M20 X D20 L=30
410185	1	BOLT HEX 8.8 DEL M6X16 A2
420847	1	BOLT HEX 8.8 DEL M8X85
430910	1	BOLT HEX 8.8 DEL M20X110
460143	1	NUT HEX M8 LOCK A2 DIN985
460261	1	NUT HEX M6X1 LOCK A2 DIN985
460806	1	NUT HEX M20X2.5 LOCK
461200	1	NUT HEX M20X1.5 JAMB.
480384	1	PIN COTTER 3/16 x 1-1/2"
784008	1	HOSE HY X 1/4" X 98.4"STR+ELB
784025	1	HOSE HY X 1/4" x 86.6"STR+ELB
784078	1	HOSE HY X 1/4 X 417.33"STR+ELB
10466003	1	COUPLER PIONEER 8010-04 1/2NPT
14031800	1	ADAPTOR F.HY CYLINDER L=40
75074400	1	SEAL KIT 78121800/21/44
78120100	1	CYLINDER TELESC.70/60/40
78122100	1	CYLINDER DOUBLE D50/25-298

WWW.ECOTRONIK.PL

HYD EAGLE HZ 80-90' W/ DH
C0300-HIN, 01:01:16

Page 0

Date 16.03.2016 13:34

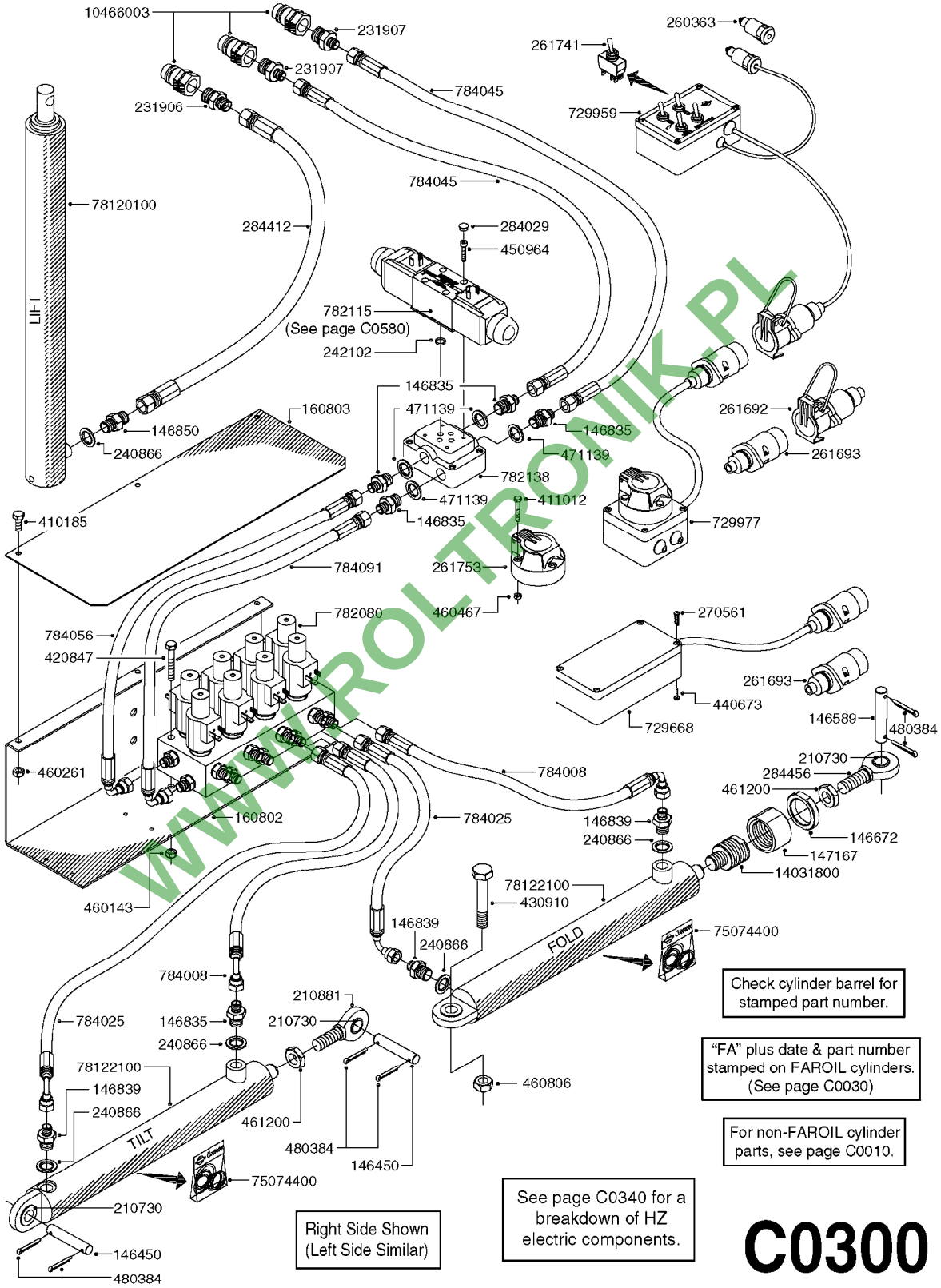

WWW.ROLTRONIK.PL

parts-n°	order qty	description
146450	1	PIN D19.8 X 75 WITH 2 X D5
146589	1	PIN D19.8 X 65
146672	1	NUT HEX LOCK F.ADJUSTER
146835	1	HEX NIPPLE 1/4" - 3/8" BSP
146839	1	HEX NIPPLE 1/4"X3/8" BSP 0.7MM
146850	1	HEX NIPPLE 3/8"x3/8" - 1.8mm
147167	1	BUSHING D50/D36X45MM
160802	1	MOUNT PLATE F.HYD SOLENOID'HZ'
160803	1	COVER PLATE F.HYD SOLENOID'HZ'
210730	1	BEARING F.LINK HEAD M20
210881	1	LINK HEAD GAR 20 DO
231906	1	HEX NIPPLE 3/8"BSP X 1/2"NPT
231907	1	HEX NIPPLE 1/4"BSP X 1/2"NPT
240866	1	DOWTYSEAL 3/8"
242102	1	O-RING Ø9.25X1.78 NITRIL 90SH
260363	1	PLUG 2 POLE 12V
261692	1	PLUG ELEC.7 POLE FEMALE F.CABL
261693	1	PLUG ELEC. 7 POLE MALE
261741	1	SWITCH 2 POLE 12V TOGGLE PRESS
261753	1	PLUG ELEC.7 POLE FEMALE F.BASE
270561	1	SCREW W/SPRING ASSY. (QTY 1)
284029	1	COVER PLUS D10.5/12.0X5.0
284412	1	HOSE HY 3/8" X 315" STR+STR
284456	1	LINK HEAD M20 X D20 L=30
410185	1	BOLT HEX 8.8 DEL M6X16 A2
411012	1	SCREW M5X30 STAINLESS
420847	1	BOLT HEX 8.8 DEL M8X85
430910	1	BOLT HEX 8.8 DEL M20X110
440673	1	SCREW F.PLASTIC 5X12 SS
450964	1	SCREW M5X30 F.CYLINDER
460143	1	NUT HEX M8 LOCK A2 DIN985
460261	1	NUT HEX M6X1 LOCK A2 DIN985
460467	1	NUT HEX M5 GALV.
460806	1	NUT HEX M20X2.5 LOCK
461200	1	NUT HEX M20X1.5 JAMB.
471139	1	WASHER D22/D17X1.5 BRASS
480384	1	PIN COTTER 3/16 x 1-1/2"
729668	1	DISTRIBUTION BOX, 4 FUNCTION
729959	1	CONTROL BOX DAH 4-FUNCTION
729977	1	DAH DIRECTIONAL VLV JUNC. BOX
782080	1	MANIFOLD BLOCK, 4 FUNCTION
782115	1	HY SOLENOID VALVE DH HYD
782138	1	HY-BLOCK 1-VALVE W LS-PORT
784008	1	HOSE HY X 1/4" X 98.4"STR+ELB
784025	1	HOSE HY X 1/4" x 86.6"STR+ELB
784045	1	HOSE HY X 1/4 X 157.50"STR+STR
784056	1	HOSE HY X 1/4 X 394.00'STR+ELB
784091	1	HOSE HY X 1/4 X 295.25"STR+ELB
10466003	1	COUPLER PIONEER 8010-04 1/2NPT
14031800	1	ADAPTOR F.HY CYLINDER L=40
75074400	1	SEAL KIT 78121800/21/44
78120100	1	CYLINDER TELESC.70/60/40
78122100	1	CYLINDER DOUBLE D50/25-298

WWW.PO.TRONIK.PL

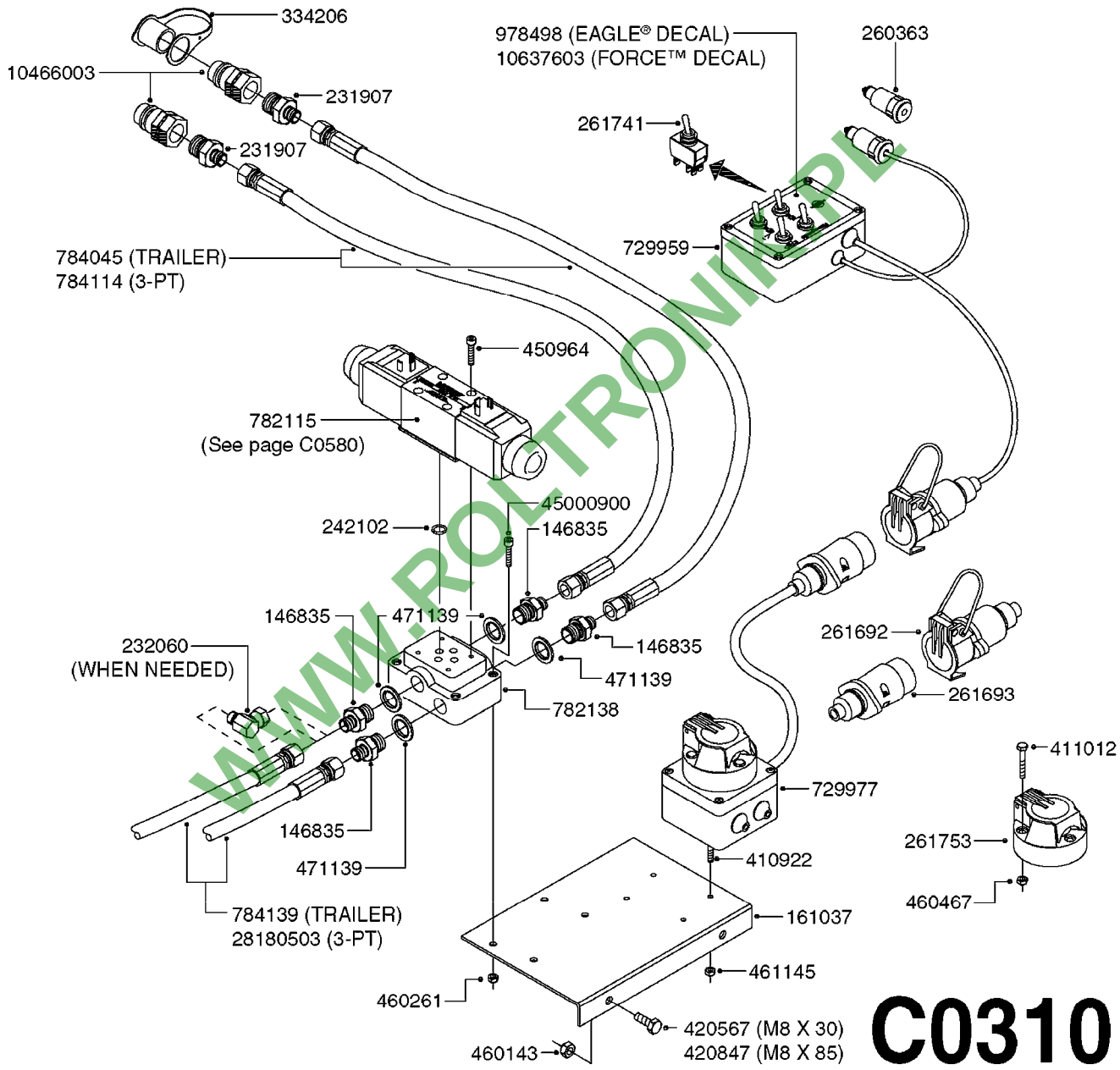

WWW.ROLTRONIK.PL

parts-n°	order qty	description
146835	1	HEX NIPPLE 1/4" - 3/8" BSP
161037	1	MOUNT PLATE F.DH VICKERS VALVE
231907	1	HEX NIPPLE 1/4"BSP X 1/2"NPT
232060	1	HY.ELBOW 1/4" BSP SWIVEL
242102	1	O-RING Ø9.25X1.78 NITRIL 90SH
260363	1	PLUG 2 POLE 12V
261692	1	PLUG ELEC.7 POLE FEMALE F.CABL
261693	1	PLUG ELEC. 7 POLE MALE
261741	1	SWITCH 2 POLE 12V TOGGLE PRESS
261753	1	PLUG ELEC.7 POLE FEMALE F.BASE
334206	1	DUST HOOD FOR HY-COUPLING
410922	1	CYL.SKR 8.8 DEL M4X20 RST
411012	1	SCREW M5X30 STAINLESS
420567	1	BOLT HEX 8.8 DEL M8X30 FT
420847	1	BOLT HEX 8.8 DEL M8X85
450964	1	SCREW M5X30 F.CYLINDER
460143	1	NUT HEX M8 LOCK A2 DIN985
460261	1	NUT HEX M6X1 LOCK A2 DIN985
460467	1	NUT HEX M5 GALV.
461145	1	NUT HEX M4 LOCK
471139	1	WASHER D22/D17X1.5 BRASS
729959	1	CONTROL BOX DAH 4-FUNCTION
729977	1	DAH DIRECTIONAL VLV JUNC. BOX
782115	1	HY SOLENOID VALVE DH HYD
782138	1	HY-BLOCK 1-VALVE W LS-PORT
784045	1	HOSE HY X 1/4 X 157.50"STR+STR
784114	1	HOSE HY X 1/4 X 80.7" STR+STR
784139	1	HOSE HY X 1/4 X 216.50"STR+STR
978498	1	DECAL SWITCH BOX DH HYD.
10466003	1	COUPLER PIONEER 8010-04 1/2NPT
10637603	1	DECAL F.SWITCH BOX - FORCE
28180503	1	HOSE HY X1/4X126.00'STR+STR
45000900	1	BOLT ALLEN HEAD M6 X 60 SS

WWW.20-TRONIK.PL

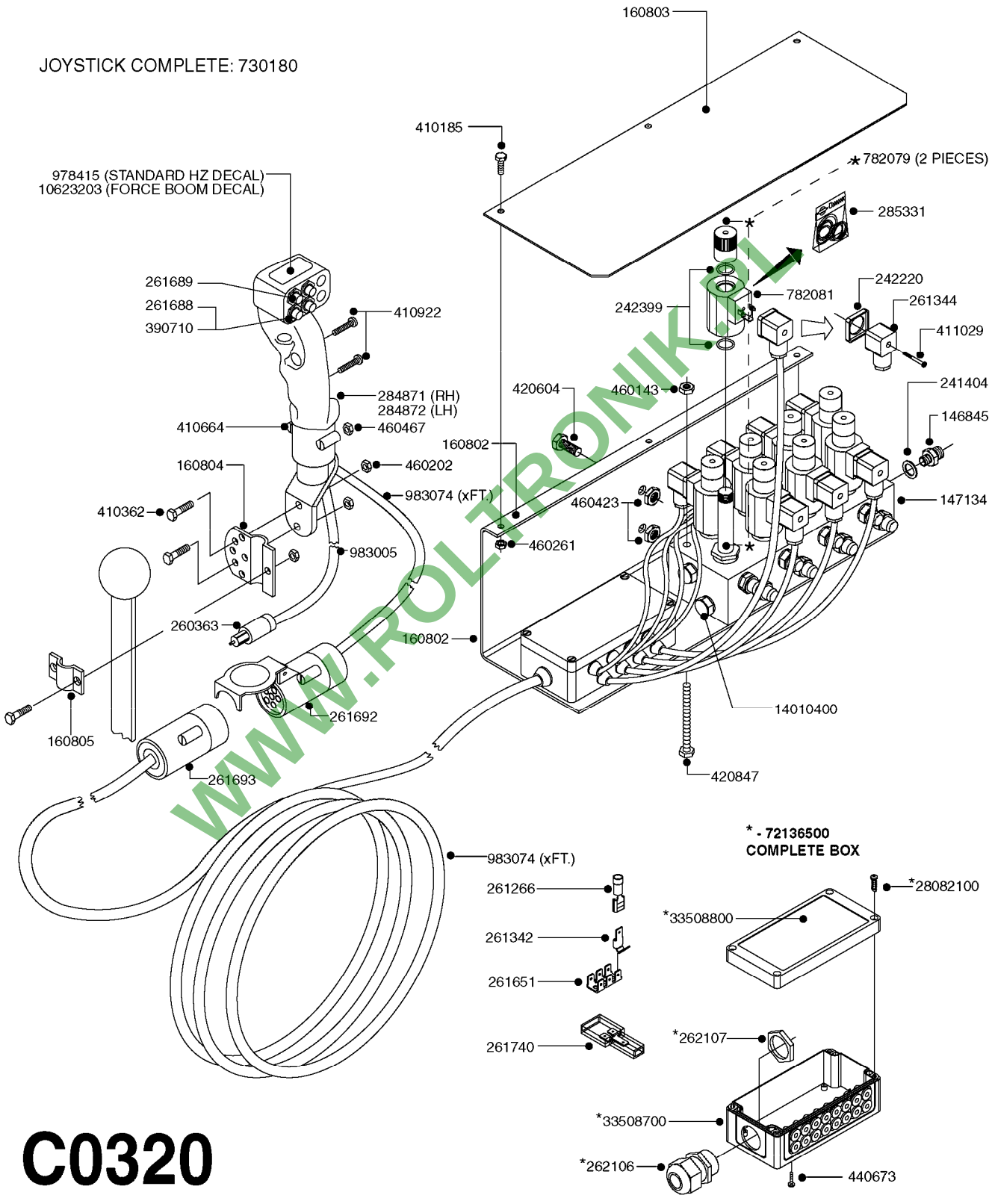

WWW.ROLTRONIK.PL

parts-nº	order qty	description
146845	1	HEX NIPPLE 1/4"X1/4"
147134	1	MANIFOLD 4-FUNCTION
160802	1	MOUNT PLATE F.HYD SOLENOID'HZ'
160803	1	COVER PLATE F.HYD SOLENOID'HZ'
160804	1	MOUNT BRACKET F.HANDLE
160805	1	MOUNT STRAP F.HANDLE
241404	1	DOWTY SEAL 1/4"
242220	1	GASKET F. HIRSMANN PLUG
242399	1	O-RING F.HYD SOLENOID VALVE
260363	1	PLUG 2 POLE 12V
261266	1	CONNECTOR END F.CABLE HP
261342	1	SPADE F.ELEC.3 WAY CONNECTOR
261344	1	HIRSCHMANN PLUG B
261651	1	SPADE F.ELEC.6 POLE CONNECTOR
261688	1	SWITCH F. HANDLE WHITE
261689	1	CAP RUBBER F. SWITCH JOYSTICK
261692	1	PLUG ELEC.7 POLE FEMALE F.CABL
261693	1	PLUG ELEC. 7 POLE MALE
261740	1	SPADE F.ELEC.3 POLE CONN.INSUL
262106	1	BULKHEAD F. CABLE 6.5-14 BLACK
262107	1	NUT F. BULKHEAD CABLE BLACK
284871	1	CONTROL HANDLE RIGHT HALF
284872	1	CONTROL HANDLE LEFT HALF
285331	1	SEAL KIT F. HZ HYD.SOLENOID 96
390710	1	SWITCH F.HANDLE GREY MACHINED
410185	1	BOLT HEX 8.8 DEL M6X16 A2
410362	1	BOLT HEX 8.8 SS M6X20 FT
410664	1	BOLT HEX M5 X 20
410922	1	CYL.SKR 8.8 DEL M4X20 RST
411029	1	SCREW M3X35 F.HIRSMANN PLUG
420604	1	BOLT HEX 8.8 DEL M10X25 FT DIN933
420847	1	BOLT HEX 8.8 DEL M8X85
440673	1	SCREW F.PLASTIC 5X12 SS
460143	1	NUT HEX M8 LOCK A2 DIN985
460202	1	NUT HEX M6
460261	1	NUT HEX M6X1 LOCK A2 DIN985
460423	1	NUT HEX M10X1.5 LOCK
460467	1	NUT HEX M5 GALV.
730180	1	HYD.KIT JOYSTICK CTRL HANDLE
782079	1	CARTRIDGE VALVE
782081	1	SOLENOID F. CARTRIDGE VALVE
978415	1	DECAL CONTROL HANDLE
983005	1	ELEC. CABLE 2 WIRE X 1.5MM
983074	1	ELEC. CABLE 5 WIRE X 1.5MM
10623203	1	DECAL F.JOYSTICK - FORCE
14010400	1	PLUG 1/4" BSP
28082100	1	SCREW F. BOX LID 1/4" L=20
33508700	1	BOX BOTTOM 160X80X40 BLACK 1-HOLE
33508800	1	LID 160X80X15 BLK W/SCREWS
72136500	1	UNIV. CONNECTION BOX F. EC

WWW.FOLTRONIK.PL

	Agroparts: www.HARDI-INTERNATIONAL.com	
HARDI	HYD EAGLE HZ JOYSTICK 2005 C0340-HIN, 01:01:16	Page 0 Date 16.03.2016 13:34

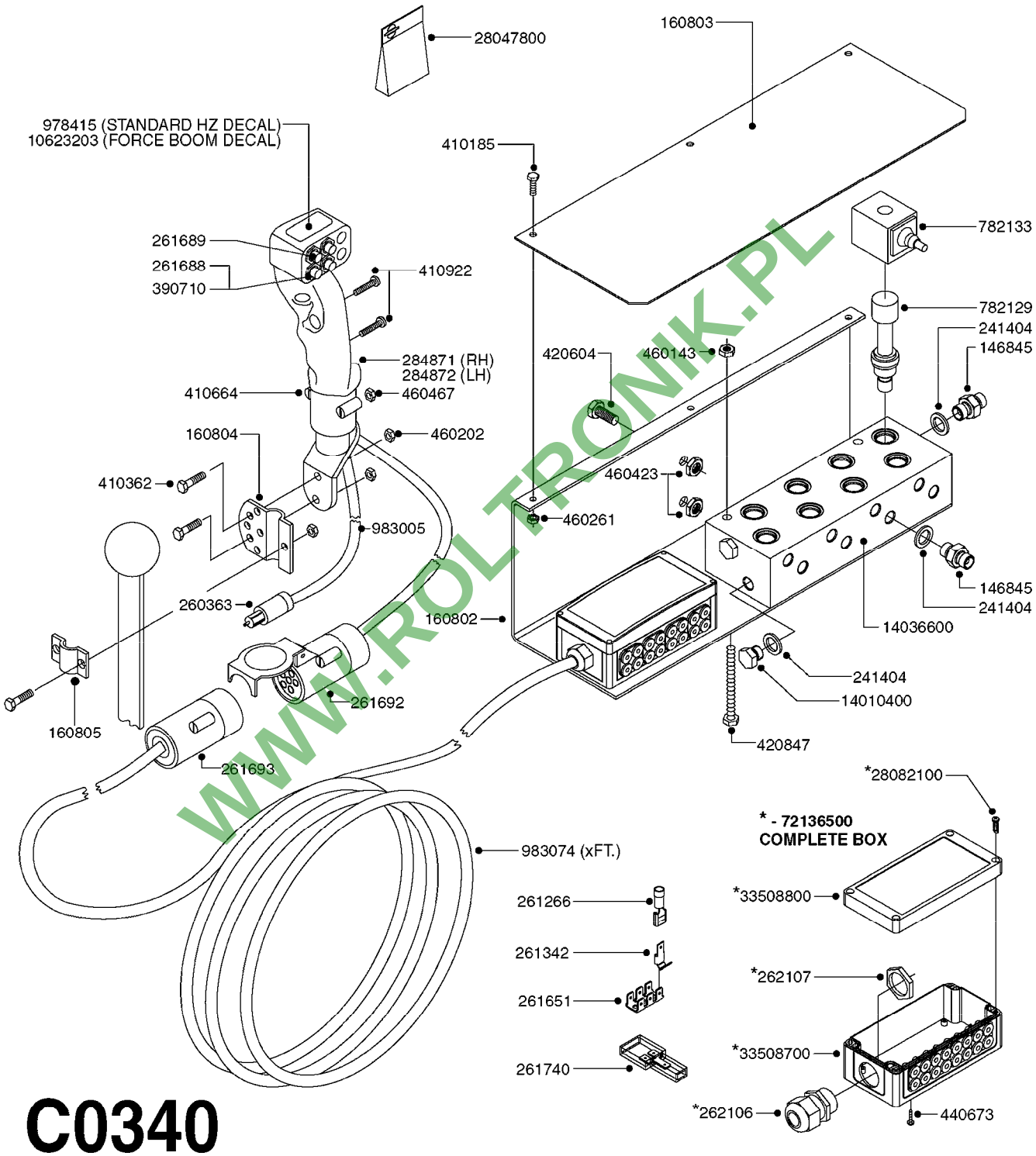

WWW.ROLTRONIK.PL

C0340

parts-nº	order qty	description
146845	1	HEX NIPPLE 1/4"X1/4"
160802	1	MOUNT PLATE F.HYD SOLENOID'HZ'
160803	1	COVER PLATE F.HYD SOLENOID'HZ'
160804	1	MOUNT BRACKET F.HANDLE
160805	1	MOUNT STRAP F.HANDLE
241404	1	DOWTY SEAL 1/4"
260363	1	PLUG 2 POLE 12V
261266	1	CONNECTOR END F.CABLE HP
261342	1	SPADE F.ELEC.3 WAY CONNECTOR
261651	1	SPADE F.ELEC.6 POLE CONNECTOR
261688	1	SWITCH F. HANDLE WHITE
261689	1	CAP RUBBER F. SWITCH JOYSTICK
261692	1	PLUG ELEC.7 POLE FEMALE F.CABL
261693	1	PLUG ELEC. 7 POLE MALE
261740	1	SPADE F.ELEC.3 POLE CONN.INSUL
262106	1	BULKHEAD F. CABLE 6.5-14 BLACK
262107	1	NUT F. BULKHEAD CABLE BLACK
284871	1	CONTROL HANDLE RIGHT HALF
284872	1	CONTROL HANDLE LEFT HALF
390710	1	SWITCH F.HANDLE GREY MACHINED
410185	1	BOLT HEX 8.8 DEL M6X16 A2
410362	1	BOLT HEX 8.8 SS M6X20 FT
410664	1	BOLT HEX M5 X 20
410922	1	CYL.SKR 8.8 DEL M4X20 RST
420604	1	BOLT HEX 8.8 DEL M10X25 FT DIN933
420847	1	BOLT HEX 8.8 DEL M8X85
440673	1	SCREW F.PLASTIC 5X12 SS
460143	1	NUT HEX M8 LOCK A2 DIN985
460202	1	NUT HEX M6
460261	1	NUT HEX M6X1 LOCK A2 DIN985
460423	1	NUT HEX M10X1.5 LOCK
460467	1	NUT HEX M5 GALV.
782129	1	SOLENOID VALVE 25L, 3/4"NC
782133	1	SOLENOID W.CABLE F.VALVE782129
978415	1	DECAL CONTROL HANDLE
983005	1	ELEC. CABLE 2 WIRE X 1.5MM
983074	1	ELEC. CABLE 5 WIRE X 1.5MM
10623203	1	DECAL F.JOYSTICK - FORCE
14010400	1	PLUG 1/4" BSP
14036600	1	MANIFOLD 4-FUNCTION SPC 2004
28047800	1	SEAL KIT F.782129
28082100	1	SCREW F. BOX LID 1/4" L=20
33508700	1	BOX BOTTOM 160X80X40 BLACK 1-HOLE
33508800	1	LID 160X80X15 BLK W/SCREWS
72136500	1	UNIV. CONNECTION BOX F. EC

WWW.ROL-TRONIK.PL

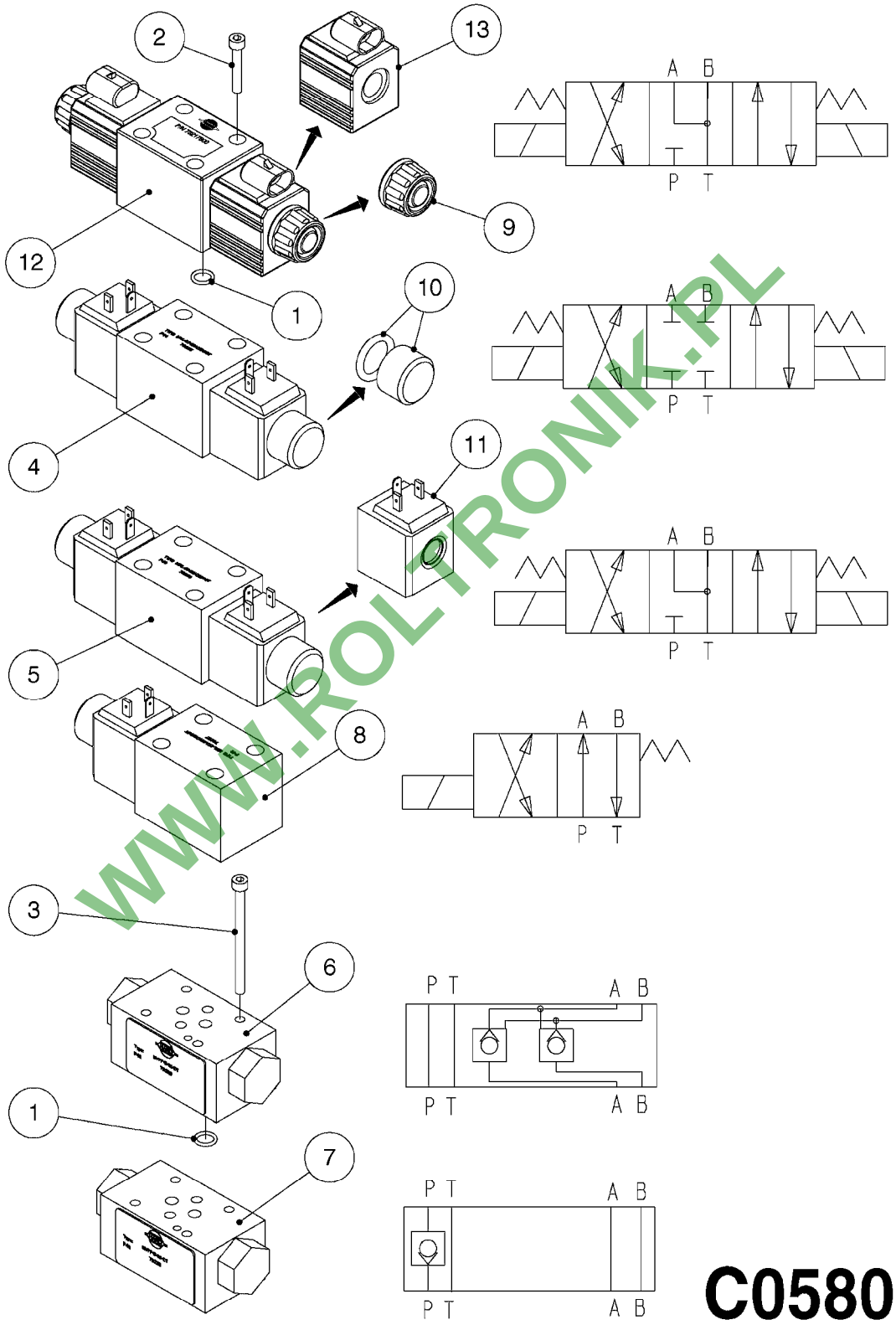

WWW.ROLTRONIK.PL

C0580

CETOP VALVES
C0580-HIN, 01:01:16

Pos.	parts-n°	order qty	description
1	242102	1	O-RING Ø9.25X1.78 NITRIL 90SH
2	450964	1	SCREW M5X30 F.CYLINDER
3	450965	1	SCREW ROUND M5X70
4	782115	1	HY SOLENOID VALVE DH HYD
5	782116	1	MAGNET VLV.MD1L-S3/10N-D12K1/P
6	782118	1	LOCK VALVE MVPP-D
7	782146	1	HYD. CHECK VALVE 1 WAY
8	782829	1	SOLENOID MD1L-TA/10N-D12K1/DT
9	28123700	1	CAP F.SOLENOID - MD1L
10	74187700	1	CAP + O-RING F.CETOP - MD1L
11	78216000	1	SOLENOID F.CETOP VALVE - MD1L
12	78217800	1	MAGNET VLV.MD1L-S3/10N-D12K8DT
13	78218200	1	SOLENOID W/AMP F.MD1L

WWW.ROLTRONIK.PL

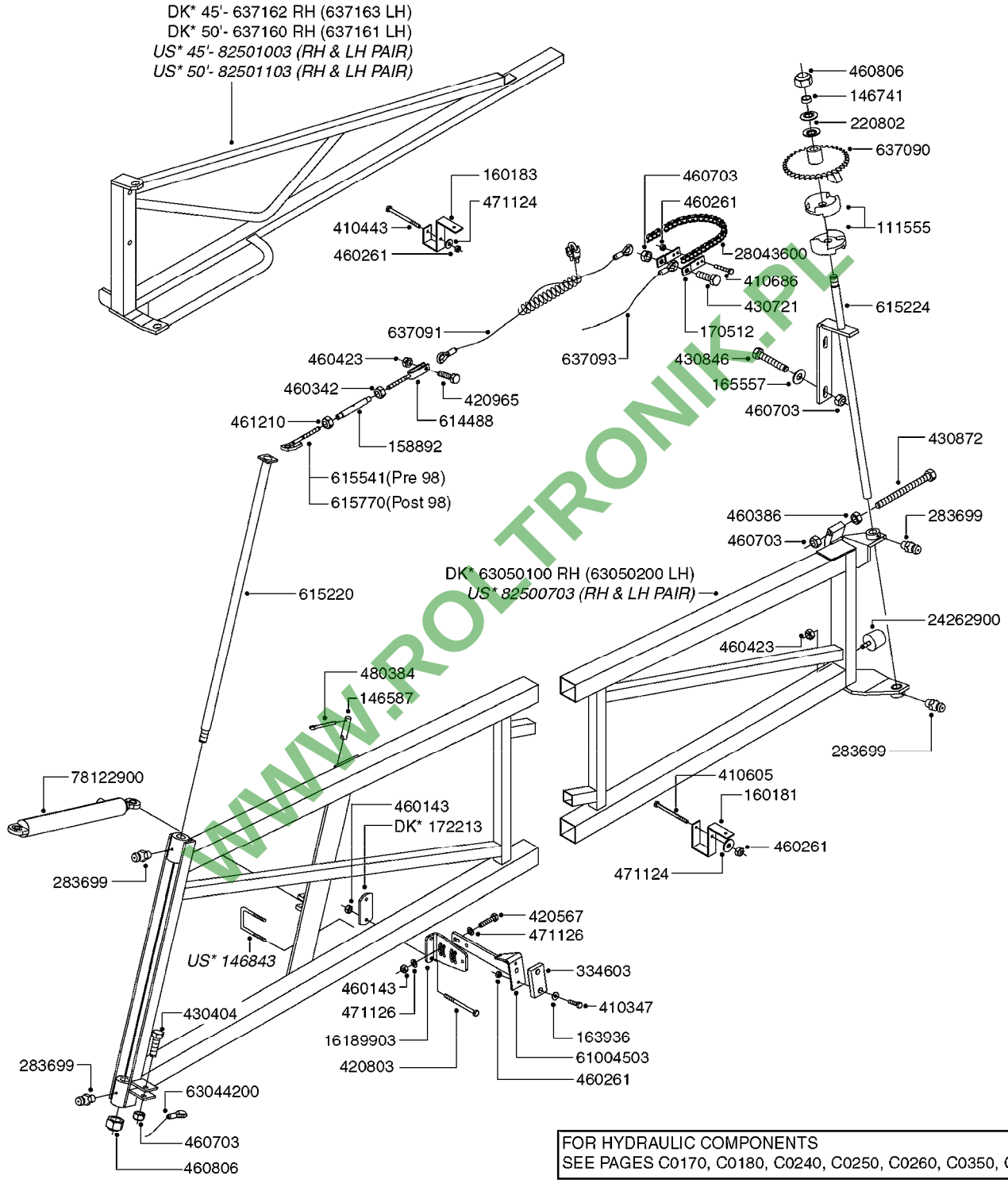

WWW.ROLTRONIK.PL

FOR HYDRAULIC COMPONENTS
SEE PAGES C0170, C0180, C0240, C0250, C0260, C0350, C0360

D0260

DK* = DENMARK STEEL PARTS
US = NORTH AMERICAN STEEL PARTS*

parts-nº	order qty	description
111555	1	BREAKAWAY CLUTCH EG.(23MM)
146587	1	PIN D16.8 X 65
146741	1	BUSHING D28/D22.2X10
146843	1	BOLT U M8 F.60 x 60
158892	1	TURN BUCKLE HOUS
160181	1	CLAMP NOZZLE TUBE 60X60
160183	1	CLAMP NOZZLE TUBE 50X30
163936	1	WASHER D15/D6.2X1
165557	1	WASHER D28.0/D12.2X2.0 SS
170512	1	ASSEMBLY BRACKET FOR CHAIN
172213	1	FLAT BAR F.BOOM STRAP
220802	1	BELLVILLE WASHER D50/D22.4X2
283699	1	GREASE NIPPLE M6X1
334603	1	RUBBER STOP 86X48X15
410347	1	SCREW M6X20 8.8
410443	1	BOLT HEX 8.8 DEL M6X70
410605	1	BOLT HEX 8.8 DEL M6X80
410686	1	BOLT HEX 8.8 DEL M6X30
420567	1	BOLT HEX 8.8 DEL M8X30 FT
420803	1	BOLT HEX 8.8 DEL M8X90
420965	1	M10X40 MACHINE SCREW STAINLESS
430404	1	BOLT HEX 8.8 DEL M12X50
430721	1	BOLT HEX 8.8 DEL M12X40 FT
430846	1	BOLT HEX 8.8 DEL M12X80
430872	1	BOLT HEX 8.8 DEL M12X100 FT
460143	1	NUT HEX M8 LOCK A2 DIN985
460261	1	NUT HEX M6X1 LOCK A2 DIN985
460342	1	NUT HEX M10 DEL DIN934
460386	1	NUT HEX M12X1.75
460423	1	NUT HEX M10X1.5 LOCK
460703	1	NUT HEX M12X1.75 LOCK DIN985
460806	1	NUT HEX M20X2.5 LOCK
461210	1	NUT HEX M10X1.5 L.THREAD
471124	1	WASHER, M6, Ø18/ 6.4X 1.6, SS
471126	1	WASHER, M8, Ø16/ 8.4X 1.6, SS
480384	1	PIN COTTER 3/16 x 1-1/2"
614488	1	FORK/ R.THREAD 10mmX144mm
615220	1	PIN 25 X 910 FOR EAGLE
615224	1	BREAKAWAY SHAFT EAGLE
615541	1	ANCHOR PART TURNBUCKLE EAGLE
615770	1	ANCHOR F.EAGLE CABLE
637090	1	SPROCKET EAGLE
637091	1	CABLE FRONT EAGLE D7X2895
637093	1	CABLE REAR 5 X 3100MM EAGLE
637160	1	BOOM WING 50'OUTER R.EAGLE
637161	1	BOOM WING 50'OUTER L.EAGLE
637162	1	BOOM WING 45'OUTER R. EAGLE
637163	1	BOOM WING 45'OUTER LEFT EAGLE
16189903	1	PLATE F, EAGLE STOPARM
24262900	1	RUBBER STOP D50X40 M10X33
28043600	1	CHAIN 5/8X810MM (51 LINKS)
61004503	1	BOOM STOP SPB/SPC
63044200	1	CABLE CENTER EAG. 7mm x 1390mm
63050100	1	WING INNER SPB R.H. 05
63050200	1	WING INNER SPB L.H. 05
78122900	1	CYLINDER 40/22X300MM RED
82500703	1	WING INNER SET FPS SPB 45-66'
82501003	1	WING OUTER SET FPS 45' SPB
82501103	1	WING OUTER SET FPS 50' SPB

WWW.ROLTRONIK.PL

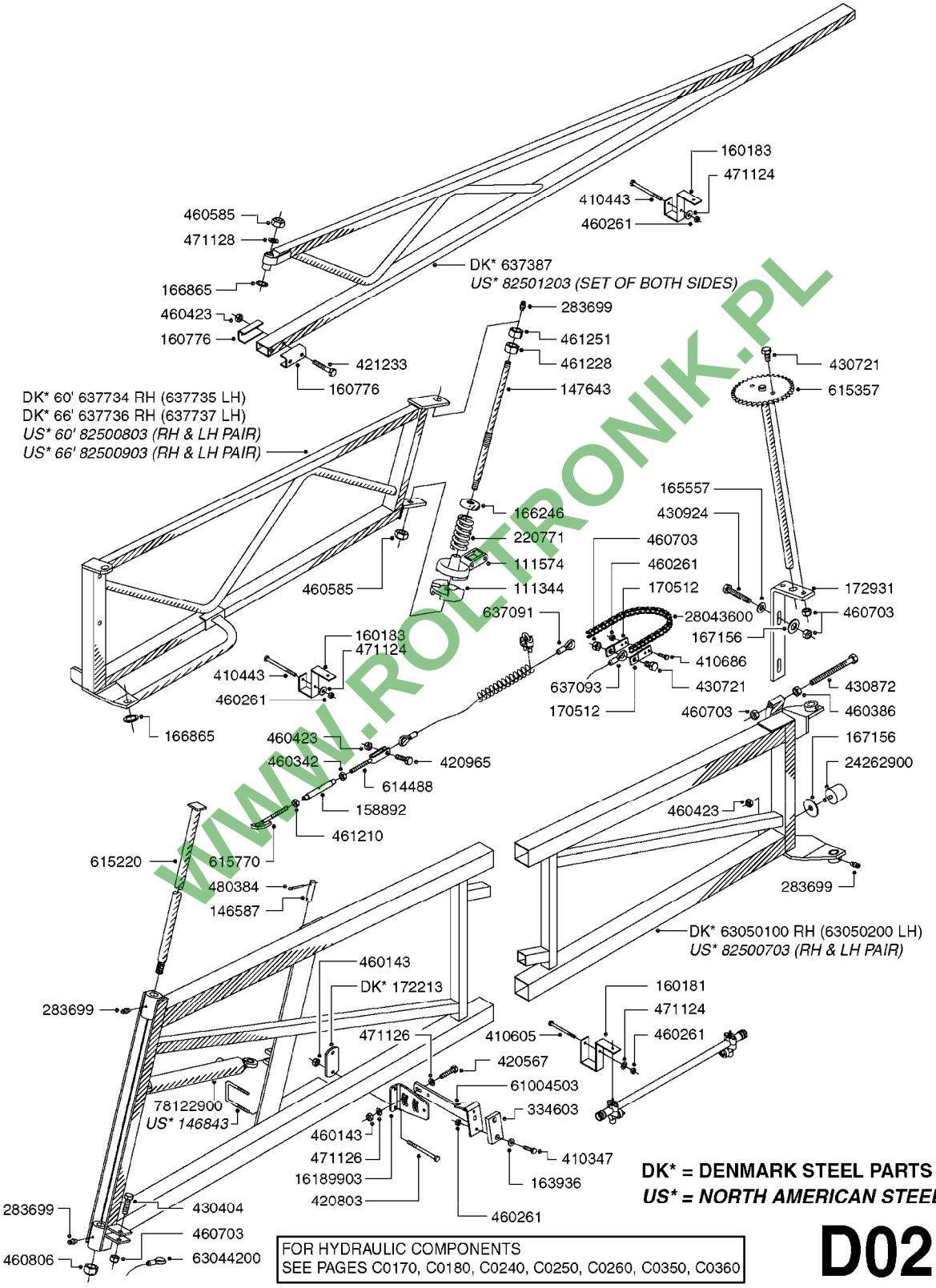

FOR HYDRAULIC COMPONENTS
SEE PAGES C0170, C0180, C0240, C0250, C0260, C0350, C0360

D0270

WWW.ROLTRONIK.PL

parts-nº	order qty	description
111344	1	CLAW CLUTCH LOWER (21MM)
111574	1	CLAW CLUTCH D100 UP.(MACH)
146587	1	PIN D16.8 X 65
146843	1	BOLT U M8 F.60 x 60
147643	1	AXLE F.BM BRKWY. W. ZERT L=426
158892	1	TURN BUCKLE HOUS
160181	1	CLAMP NOZZLE TUBE 60X60
160183	1	CLAMP NOZZLE TUBE 50X30
160776	1	U-CHANNEL F.3PT.
163936	1	WASHER D15/D6.2X1
165557	1	WASHER D28.0/D12.2X2.0 SS
166246	1	WASHER CUP D53 F.SPRING
166865	1	WASHER D35/D25X2
167156	1	WASHER D46.5/D12.4X2.5
170512	1	ASSEMBLY BRACKET FOR CHAIN
172213	1	FLAT BAR F.BOOM STRAP
172931	1	FLAT STEEL 15X50
220771	1	SPRING D53/D43X100
283699	1	GREASE NIPPLE M6X1
334603	1	RUBBER STOP 86X48X15
410347	1	SCREW M6X20 8.8
410443	1	BOLT HEX 8.8 DEL M6X70
410605	1	BOLT HEX 8.8 DEL M6X80
410686	1	BOLT HEX 8.8 DEL M6X30
420567	1	BOLT HEX 8.8 DEL M8X30 FT
420803	1	BOLT HEX 8.8 DEL M8X90
420965	1	M10X40 MACHINE SCREW STAINLESS
421233	1	BOLT HEX 8.8 10.9 DEL M10X70
430404	1	BOLT HEX 8.8 DEL M12X50
430721	1	BOLT HEX 8.8 DEL M12X40 FT
430872	1	BOLT HEX 8.8 DEL M12X100 FT
430924	1	BOLT HEX 8.8 DEL M12 X 85
460143	1	NUT HEX M8 LOCK A2 DIN985
460261	1	NUT HEX M6X1 LOCK A2 DIN985
460342	1	NUT HEX M10 DEL DIN934
460386	1	NUT HEX M12X1.75
460423	1	NUT HEX M10X1.5 LOCK
460585	1	NUT HEX M16X2 LOCK
460703	1	NUT HEX M12X1.75 LOCK DIN985
460806	1	NUT HEX M20X2.5 LOCK
461210	1	NUT HEX M10X1.5 L.THREAD
461228	1	NUT HEX M20
461251	1	NUT HEX M20 X 2.5 JAMB
471124	1	WASHER, M6, Ø18/ 6.4X 1.6, SS
471126	1	WASHER, M8, Ø16/ 8.4X 1.6, SS
471128	1	WASHER, M16, Ø30/17.0X 3.0, SS
480384	1	PIN COTTER 3/16 x 1-1/2"
614488	1	FORK/ R.THREAD 10mmX144mm
615220	1	PIN 25 X 910 FOR EAGLE
615357	1	SHAFT W.SPROCKET EAGLE 60'3PT
615770	1	ANCHOR F.EAGLE CABLE
637091	1	CABLE FRONT EAGLE D7X2895
637093	1	CABLE REAR 5 X 3100MM EAGLE
637387	1	BOOM WING BRKWAY E. 60-90'
637734	1	BOOM WING OUT. 60'R.EAG 97
637735	1	BOOM WING OUT. 60'L.EAG 97
637736	1	BOOM WING OUT. 66'R.EAG 97
637737	1	BOOM WING OUT. 66'L.EAG 97
16189903	1	PLATE F, EAGLE STOPARM
24262900	1	RUBBER STOP D50X40 M10X33
28043600	1	CHAIN 5/8X810MM (51 LINKS)

WWW.FOTRONIK.PL

parts-n°	order qty	description
61004503	1	BOOM STOP SPB/SPC
63044200	1	CABLE CENTER EAG. 7mm x 1390mm
63050100	1	WING INNER SPB R.H. 05
63050200	1	WING INNER SPB L.H. 05
78122900	1	CYLINDER 40/22X300MM RED
82500703	1	WING INNER SET FPS SPB 45-66'
82500803	1	WING OUTER SET FPS 60' SPB
82500903	1	WING OUTER SET FPS 66' SPB
82501203	1	BREAKAWAY SET FPS 60-66' SPB

WWW.ROLTRONIK.PL

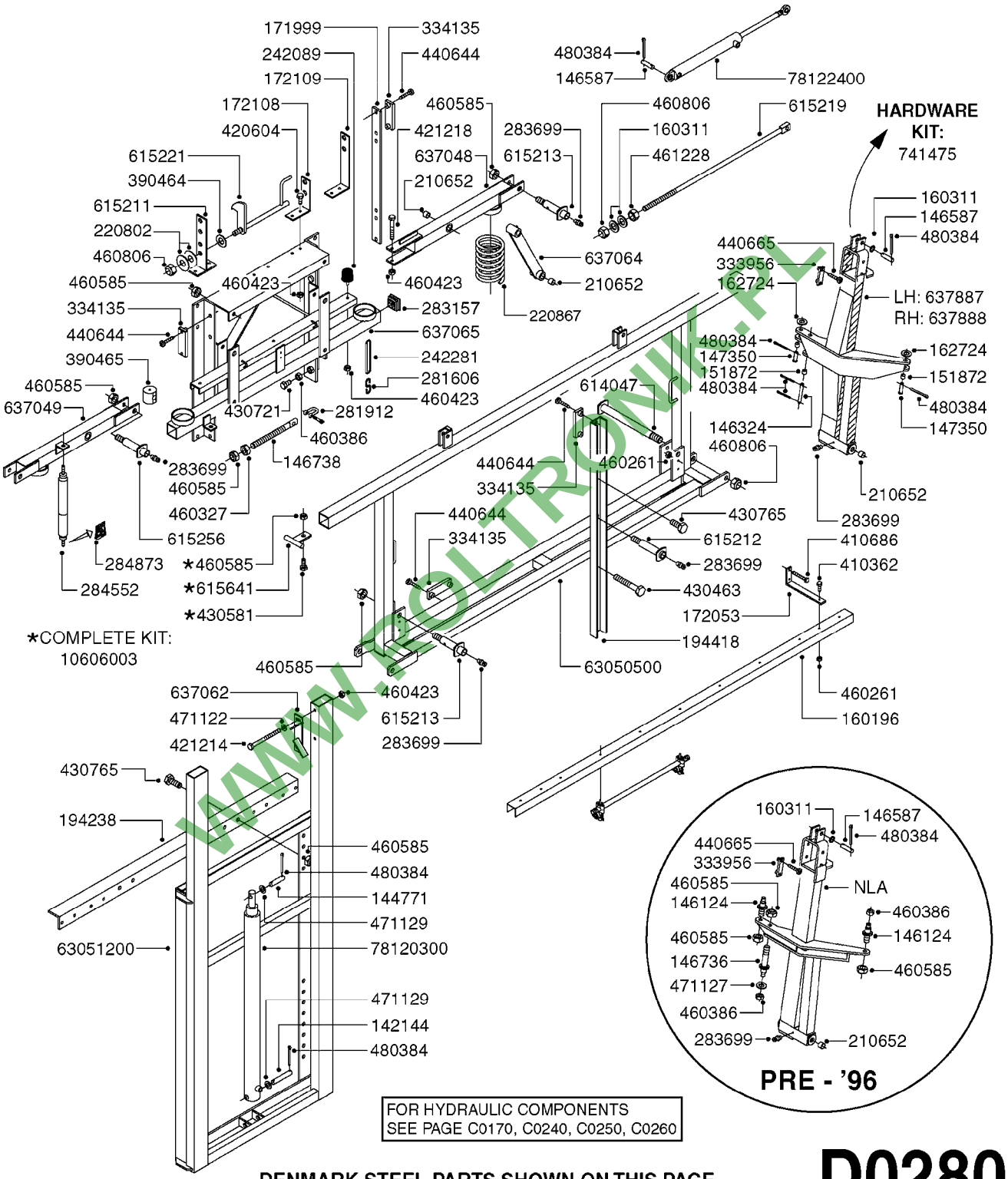

FOR HYDRAULIC COMPONENTS
SEE PAGE C0170, C0240, C0250, C0260

DENMARK STEEL PARTS SHOWN ON THIS PAGE

FOR NORTH AMERICAN STEEL PARTS, SEE PAGE D0290

D0280

WWW.KOLTRONIK.PL

parts-nº	order qty	description
142144	1	PIN 20 X 115MM
144771	1	PIN D19.8 X 80
146124	1	ANCHOR PIN CABLE EAGLE
146324	1	SHAFT D16.8 L102/2 X 5
146587	1	PIN D16.8 X 65
146736	1	ANCHOR PIN FOR CYLINDER EAGLE
146738	1	PIN FOR CENTER CABLE EAGLE
147350	1	PIN D16.8 L60MM
151872	1	BUSHING D22.0/18.0 10MM
160196	1	NOZZLE TRACK EAGLE
160311	1	WASHER D30/D20.4X2
162724	1	WASHER D25/D18.1X1
171999	1	FLATBAR
172053	1	NOZZLE TRACK HOLDER
172108	1	HOOKMOUNT SHORT EAGLE
172109	1	HOOKMOUNT LONG EAGLE
194238	1	CROSS BRACE SPB
194418	1	U CHANNEL 65 X 1175 CENTER EAG
210652	1	BUSHING TEFLON D25/D22X20
220802	1	BELLVILLE WASHER D50/D22.4X2
220867	1	SPRING 134/14/320 EAGLE 60/66'
242089	1	RUBBER STOP D50X40 M10
242281	1	RUBBER BAND OVAL 180MM
281606	1	S-HOOK GALVANIZED
281912	1	GRILLETE M-10 INOX.480 KG
283157	1	PLUG F.DRAIN 60X60X4
283699	1	GREASE NIPPLE M6X1
284552	1	SHOCK ABSORBER F.EAGLE BOOM
284873	1	KIT F.SHOCK ABSORBER HDW.EAG.
333956	1	SLIDE SHOE 91X25X10
334135	1	SLIDE SHOE 140X45X15
390464	1	WASHER NYLON 40/21/3
390465	1	JOINER BLOCK TRAPEEZE EAGLE
410362	1	BOLT HEX 8.8 SS M6X20 FT
410686	1	BOLT HEX 8.8 DEL M6X30
420604	1	BOLT HEX 8.8 DEL M10X25 FT DIN933
421214	1	BOLT HEX 8.8 DEL M10X110
421218	1	BOLT HEX 8.8 DEL M10X90
430463	1	BOLT HEX 8.8 DEL M16X110
430581	1	BOLT HEX 8.8 DEL M16X40 FT
430721	1	BOLT HEX 8.8 DEL M12X40 FT
430765	1	BOLT HEX 8.8 DEL M16X55
440644	1	SCREW NO.10 5/8"
440665	1	SCREW M4.2X16 STAINLESS
460261	1	NUT HEX M6X1 LOCK A2 DIN985
460327	1	NUT HEX M16X2
460386	1	NUT HEX M12X1.75
460423	1	NUT HEX M10X1.5 LOCK
460585	1	NUT HEX M16X2 LOCK
460806	1	NUT HEX M20X2.5 LOCK
461228	1	NUT HEX M20
471122	1	WASHER, M10, Ø20/10.5X 2.0, SS
471127	1	WASHER, M12, Ø24/13.0X 2.5, SS
471129	1	WASHER, M20, Ø37/21.0X 3.0, SS
480384	1	PIN COTTER 3/16 x 1-1/2"
614047	1	PIN D22 X 243 HINGE EAGLE
615211	1	HOOKMOUNT WELDMENT EAGLE
615212	1	PIN D22 X 84 LUBED F.EAGLE
615213	1	PIN D22 X 70 LUBED F.EAGLE
615219	1	TILT CYL.REPLACEMENT EAGLE
615221	1	HOOK WELDMENT EAGLE

WWW.PDL-TRONIK.PL

parts-nº	order qty	description
615256	1	PIN 22 X 70 SHORT THREA. EAGLE
615641	1	SAFETY BAR F.WNG TLT 45-66'
637048	1	SUSP.ARM RIGHT EAGLE
637049	1	SUSP.ARM LEFT EAGLE
637062	1	HOOK GUIDE EAGLE
637064	1	TRAPEEZE ARM EAGLE 45'-66'
637065	1	CENTER PART H FRAME EAGLE
637887	1	HINGE EAGLE LH 45'-66' '97
637888	1	HINGE EAGLE RH 45'-66' '97
741475	1	HINGE HARDWARE KIT,M10+M16 '97
10606003	1	KIT F.TILT STOP 45'-66' EAGLE
63050500	1	CENTER FRAME SPB 05
63051200	1	H-FRAME SPB 05
78120300	1	CYLINDER 60/50/30 1100MM
78122400	1	DOUBLE CYLINDER D 40/20-300

WWW.ROLTRONIK.PL

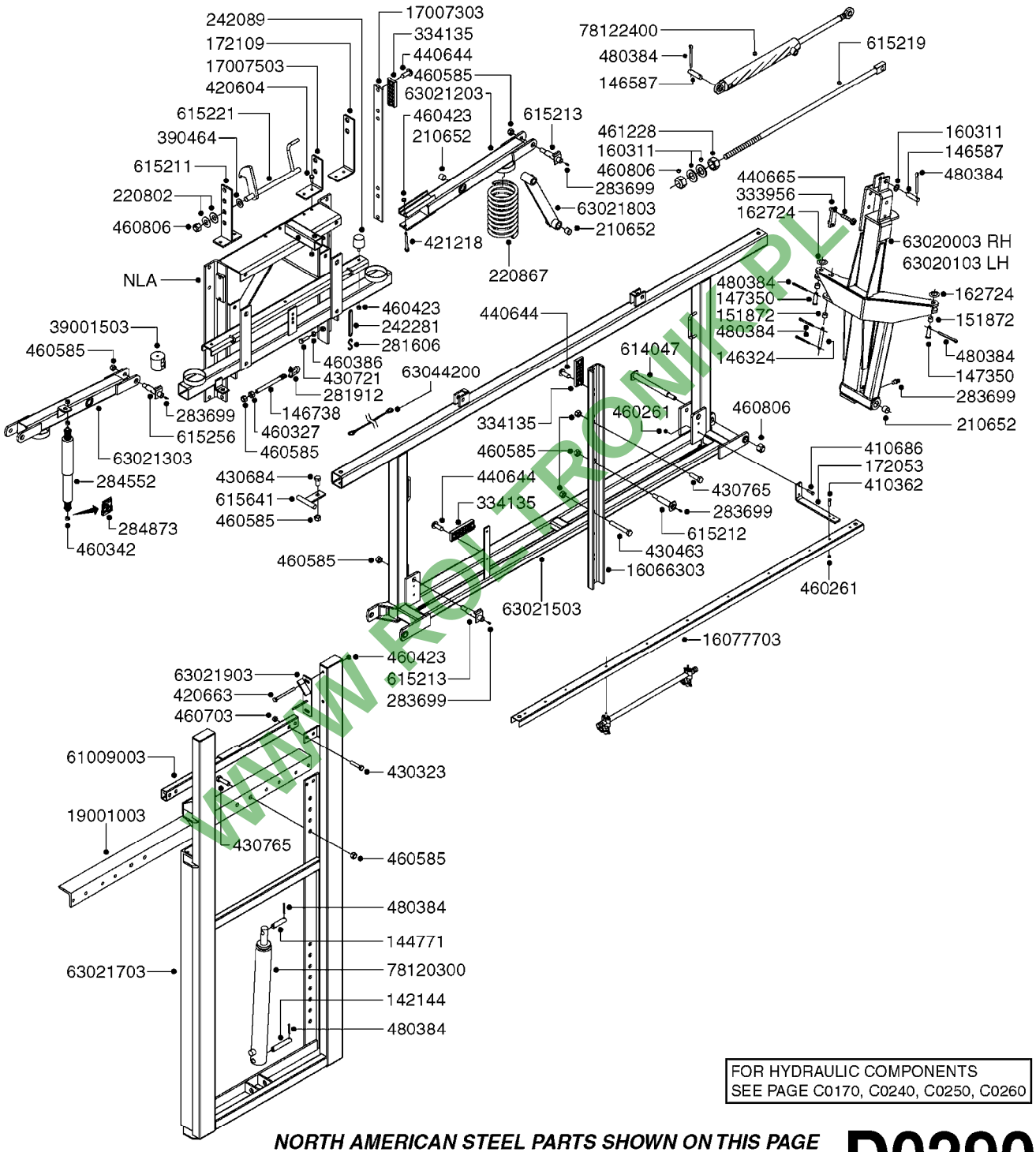

FOR HYDRAULIC COMPONENTS
SEE PAGE C0170, C0240, C0250, C0260

NORTH AMERICAN STEEL PARTS SHOWN ON THIS PAGE
FOR DENMARK STEEL PARTS, SEE PAGE D0280

D0290

WWW.ROLTRONIK.PL

HARDI	**Agroparts: www.HARDI-INTERNATIONAL.com**	
	BOOM EAG H-FRAME/CENTER 45-66' D0290-HIN, 01:01:16	Page 1 Date 16.03.2016 13:34

parts-n°	order qty	description
142144	1	PIN 20 X 115MM
144771	1	PIN D19.8 X 80
146324	1	SHAFT D16.8 L102/2 X 5
146587	1	PIN D16.8 X 65
146738	1	PIN FOR CENTER CABLE EAGLE
147350	1	PIN D16.8 L60MM
151872	1	BUSHING D22.0/18.0 10MM
160311	1	WASHER D30/D20.4X2
162724	1	WASHER D25/D18.1X1
172053	1	NOZZLE TRACK HOLDER
172109	1	HOOKMOUNT LONG EAGLE
210652	1	BUSHING TEFLON D25/D22X20
220802	1	BELLVILLE WASHER D50/D22.4X2
220867	1	SPRING 134/14/320 EAGLE 60/66'
242089	1	RUBBER STOP D50X40 M10
242281	1	RUBBER BAND OVAL 180MM
281606	1	S-HOOK GALVANIZED
281912	1	GRILLETE M-10 INOX.480 KG
283699	1	GREASE NIPPLE M6X1
284552	1	SHOCK ABSORBER F.EAGLE BOOM
284873	1	KIT F.SHOCK ABSORBER HDW.EAG.
333956	1	SLIDE SHOE 91X25X10
334135	1	SLIDE SHOE 140X45X15
390464	1	WASHER NYLON 40/21/3
410362	1	BOLT HEX 8.8 SS M6X20 FT
410686	1	BOLT HEX 8.8 DEL M6X30
420604	1	BOLT HEX 8.8 DEL M10X25 FT DIN933
420663	1	BOLT HEX 8.8 DEL M10X120 DIN931
421218	1	BOLT HEX 8.8 DEL M10X90
430323	1	BOLT HEX 8.8 DEL M12X60
430463	1	BOLT HEX 8.8 DEL M16X110
430684	1	BOLT HEX 8.8 DEL M16X30 FT
430721	1	BOLT HEX 8.8 DEL M12X40 FT
430765	1	BOLT HEX 8.8 DEL M16X55
440644	1	SCREW NO.10 5/8"
440665	1	SCREW M4.2X16 STAINLESS
460261	1	NUT HEX M6X1 LOCK A2 DIN985
460327	1	NUT HEX M16X2
460342	1	NUT HEX M10 DEL DIN934
460386	1	NUT HEX M12X1.75
460423	1	NUT HEX M10X1.5 LOCK
460585	1	NUT HEX M16X2 LOCK
460703	1	NUT HEX M12X1.75 LOCK DIN985
460806	1	NUT HEX M20X2.5 LOCK
461228	1	NUT HEX M20
480384	1	PIN COTTER 3/16 x 1-1/2"
614047	1	PIN D22 X 243 HINGE EAGLE
615211	1	HOOKMOUNT WELDMENT EAGLE
615212	1	PIN D22 X 84 LUBED F.EAGLE
615213	1	PIN D22 X 70 LUBED F.EAGLE
615219	1	TILT CYL.REPLACEMENT EAGLE
615221	1	HOOK WELDMENT EAGLE
615256	1	PIN 22 X 70 SHORT THREA. EAGLE
615641	1	SAFETY BAR F.WNG TLT 45-66'
16066303	1	U-CHANNEL F. CENTER SPB
16077703	1	CENTER TRACK SPB
17007303	1	SPACER SPB H-FRAME CENTER
17007503	1	TRANSPORT HOOK MOUNT. SPB
19001003	1	CROSS BAR H-FRAME SPB 194238
39001503	1	TRAPEZE JOINER BLOCK SPB/C NA
61009003	1	TRANS.HOOK CROSS BAR SPB N/A

WWW.ROLTRONIK.PL

parts-n°	order qty	description
63020003	1	HINGE 45'-66' RH / SPB
63020103	1	HINGE 45'-66' LH / SPB
63021203	1	TRAPEZE ARM R.H. SPB
63021303	1	TRAPEZE ARM L.H. SPB
63021503	1	CENTER FRAME SPB
63021703	1	H-FRAME SPB
63021803	1	TRAPEZE ARM SPB
63021903	1	TRANSPORT HOOK DESIGNATOR
63044200	1	CABLE CENTER EAG. 7mm x 1390mm
78120300	1	CYLINDER 60/50/30 1100MM
78122400	1	DOUBLE CYLINDER D 40/20-300

WWW.ROLTRONIK.PL

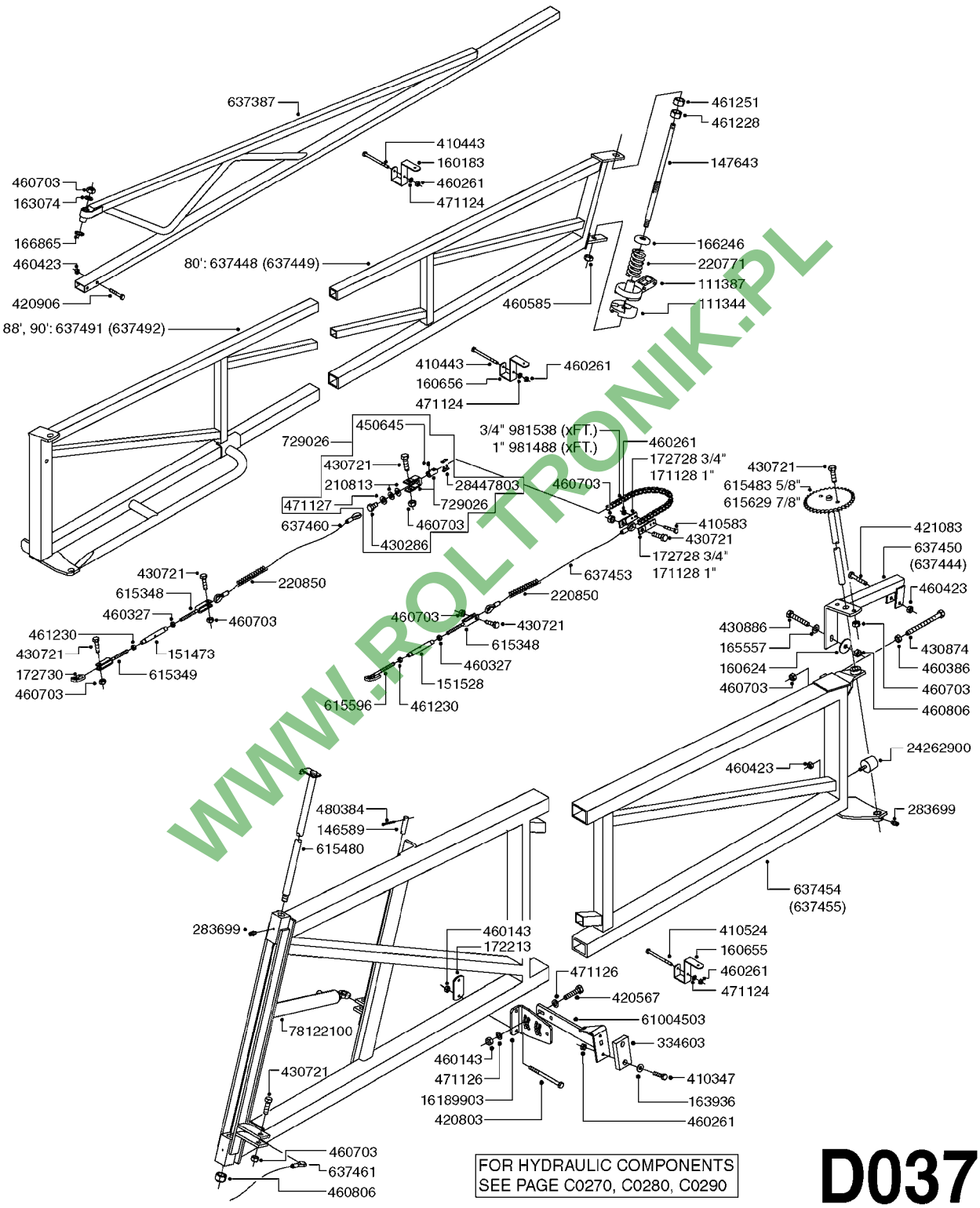

FOR HYDRAULIC COMPONENTS
SEE PAGE C0270, C0280, C0290

D0370

WWW.ROLTRONIK.PL

parts-nº	order qty	description
111344	1	CLAW CLUTCH LOWER (21MM)
111387	1	CLAW CLUTCH D100 UPPER PART
146589	1	PIN D19.8 X 65
147643	1	AXLE F.BM BRKWY. W. ZERT L=426
151473	1	TURN BUCKLE HOUSING M16-200
151528	1	TURN BUCKLE HOUSING M16-130
160183	1	CLAMP NOZZLE TUBE 50X30
160624	1	WASHER PLATE 6/13 X3
160655	1	CLAMP NOZZLE TUBE 80X60
160656	1	CLAMP NOZZLE TUBE 50X50
163074	1	WASHER D54/D17X3
163936	1	WASHER D15/D6.2X1
165557	1	WASHER D28.0/D12.2X2.0 SS
166246	1	WASHER CUP D53 F.SPRING
166865	1	WASHER D35/D25X2
171128	1	FLAT BAR 6X40
172213	1	FLAT BAR F.BOOM STRAP
172728	1	FLATBAR
172730	1	FLATBAR
210813	1	WASHER, TEFLON COATED
220771	1	SPRING D53/D43X100
220850	1	SPRING EXT.D49/7X250
283699	1	GREASE NIPPLE M6X1
334603	1	RUBBER STOP 86X48X15
410347	1	SCREW M6X20 8.8
410443	1	BOLT HEX 8.8 DEL M6X70
410524	1	BOLT HEX 8.8 DEL M6X100
410583	1	BOLT HEX 8.8 DEL M6X40
420567	1	BOLT HEX 8.8 DEL M8X30 FT
420803	1	BOLT HEX 8.8 DEL M8X90
420906	1	BOLT HEX 8.8 DEL M10X60
421083	1	BOLT HEX 8.8 DEL M10X65
430286	1	BOLT HEX 8.8 DEL M12X30 FT
430721	1	BOLT HEX 8.8 DEL M12X40 FT
430874	1	SCREW SET 8.8 DEL M12X70 FT
430886	1	BOLT HEX 8.8 DEL M20X160
450645	1	SCREW ALLAN M6 X 6 SS
460143	1	NUT HEX M8 LOCK A2 DIN985
460261	1	NUT HEX M6X1 LOCK A2 DIN985
460327	1	NUT HEX M16X2
460386	1	NUT HEX M12X1.75
460423	1	NUT HEX M10X1.5 LOCK
460585	1	NUT HEX M16X2 LOCK
460703	1	NUT HEX M12X1.75 LOCK DIN985
460806	1	NUT HEX M20X2.5 LOCK
461228	1	NUT HEX M20
461230	1	NUT HEX M16X2 LH THREAD
461251	1	NUT HEX M20 X 2.5 JAMB
471124	1	WASHER, M6, Ø18/ 6.4X 1.6, SS
471126	1	WASHER, M8, Ø16/ 8.4X 1.6, SS
471127	1	WASHER, M12, Ø24/13.0X 2.5, SS
480384	1	PIN COTTER 3/16 x 1-1/2"
615348	1	CLEVIS TURNBUCKLE M16 RH
615349	1	CLEVIS TURNBUCKLE M16 LH
615480	1	PIN F.HINGE ASSY.
615483	1	SHAFT W.SPROCKET 3/4" 80'-90'
615596	1	TURN BUCKLE ANCHOR M16 LH
615629	1	SHAFT W.SPROCKET 1' EAGLE 90'
637387	1	BOOM WING BRKWAY E. 60-90'
637444	1	BRACKET HINGE SUPP. LH 80/90'
637448	1	BOOM WING OUTER R.80'EAGLE

WWW.PGLTRONIK.PL

parts-n°	order qty	description
637449	1	BOOM WING OUTER L.80'EAGLE
637450	1	BRACKET HINGE SUPP. RH 80/90'
637453	1	CABLE REAR D7X4655 80/90'
637454	1	BOOM WING INTERM.R.80/90'EAGLE
637455	1	BOOM WING INTERM.L.80/90'EAGLE
637460	1	CABLE FRONT D10X4360 80/90'
637461	1	CABLE CENTER 80/90' 7mm x935mm
637491	1	BOOM WING OUTER RIGHT 90'
637492	1	BOOM WING OUTER LEFT 90'
729026	1	SWIVEL ASSY.F.90'CABLE
981488	1	CHAIN ROLLER 1"X17.02 90'EAGLE
981538	1	CHAIN 19.05 x11.53mm ISO 12B-1
16189903	1	PLATE F, EAGLE STOPARM
24262900	1	RUBBER STOP D50X40 M10X33
28447803	1	CHAIN LINK 3/4" F. 80'-90'
61004503	1	BOOM STOP SPB/SPC
78122100	1	CYLINDER DOUBLE D50/25-298

WWW.ROLTRONIK.PL

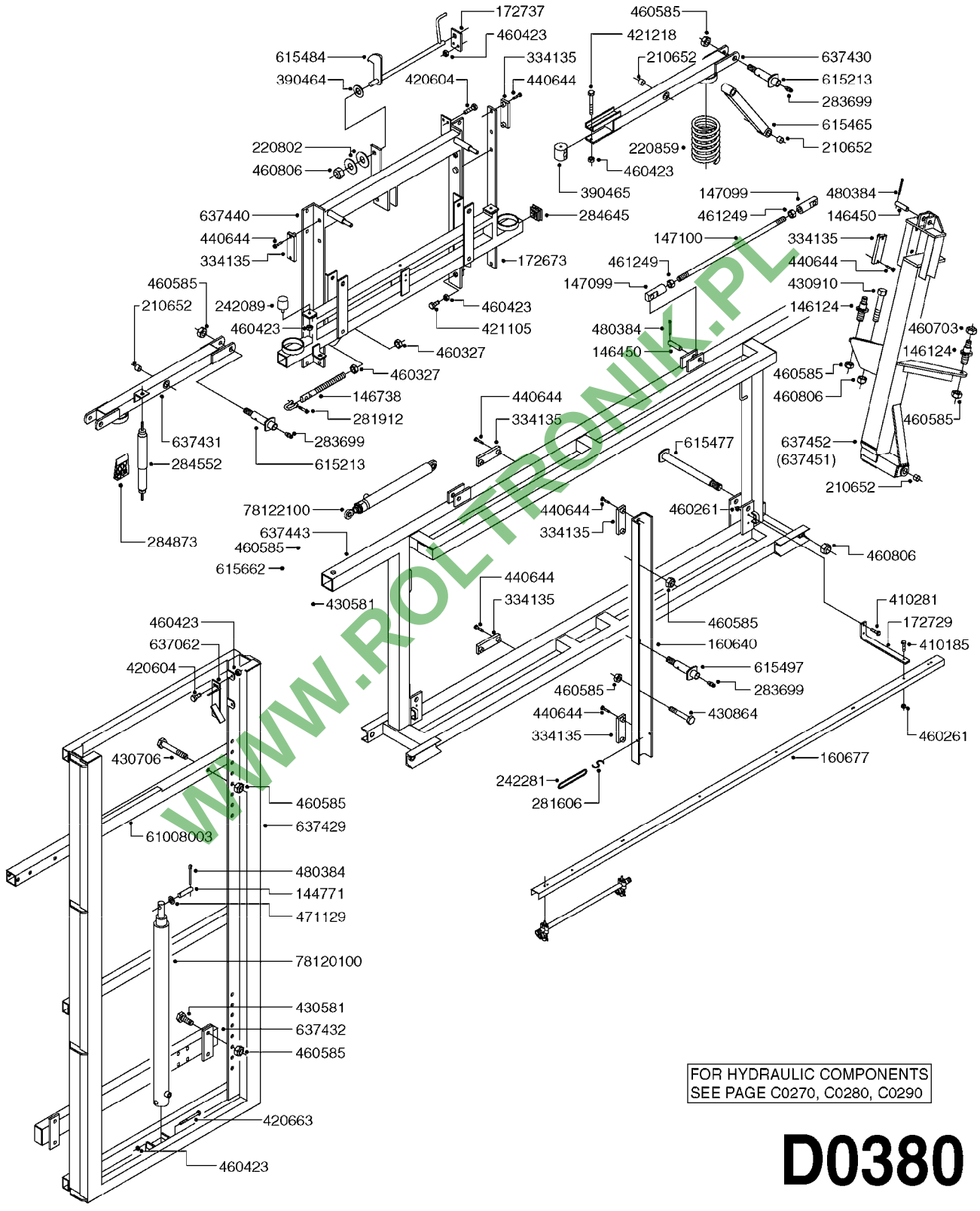

WWW.ROLTRONIK.PL

FOR HYDRAULIC COMPONENTS
SEE PAGE C0270, C0280, C0290

D0380

parts-n°	order qty	description
144771	1	PIN D19.8 X 80
146124	1	ANCHOR PIN CABLE EAGLE
146450	1	PIN D19.8 X 75 WITH 2 X D5
146738	1	PIN FOR CENTER CABLE EAGLE
147099	1	CLEVIS F.TILT ARM
147100	1	ROD F.TILT 80/90'
160640	1	U CHANNEL 80/90'
160677	1	NOZZLE TRACK 80/90'
172673	1	FLATBAR-SLIDE SHOE MNT.80-90'
172729	1	BRACKET F.NOZ.TRACK 80/90'
172737	1	BRACKET F.HOOK LIFT 80/90'
210652	1	BUSHING TEFLON D25/D22X20
220802	1	BELLVILLE WASHER D50/D22.4X2
220859	1	SPRING COIL 80/90' EAGLE
242089	1	RUBBER STOP D50X40 M10
242281	1	RUBBER BAND OVAL 180MM
281606	1	S-HOOK GALVANIZED
281912	1	GRILLETE M-10 INOX.480 KG
283699	1	GREASE NIPPLE M6X1
284552	1	SHOCK ABSORBER F.EAGLE BOOM
284645	1	PLUG 60x60x2
284873	1	KIT F.SHOCK ABSORBER HDW.EAG.
334135	1	SLIDE SHOE 140X45X15
390464	1	WASHER NYLON 40/21/3
390465	1	JOINER BLOCK TRAPEEZE EAGLE
410185	1	BOLT HEX 8.8 DEL M6X16 A2
410281	1	BOLT HEX 8.8 DEL M6X25 DIN933 A2
420604	1	BOLT HEX 8.8 DEL M10X25 FT DIN933
420663	1	BOLT HEX 8.8 DEL M10X120 DIN931
421105	1	M10X45 MACHINE SCREW STAINLESS
421218	1	BOLT HEX 8.8 DEL M10X90
430581	1	BOLT HEX 8.8 DEL M16X40 FT
430706	1	BOLT HEX 8.8 DEL M16X90
430864	1	BOLT HEX 8.8 DEL M16X120
430910	1	BOLT HEX 8.8 DEL M20X110
440644	1	SCREW NO.10 5/8"
460261	1	NUT HEX M6X1 LOCK A2 DIN985
460327	1	NUT HEX M16X2
460423	1	NUT HEX M10X1.5 LOCK
460585	1	NUT HEX M16X2 LOCK
460703	1	NUT HEX M12X1.75 LOCK DIN985
460806	1	NUT HEX M20X2.5 LOCK
461249	1	NUT HEX M22X1.5
471129	1	WASHER, M20, Ø37/21.0X 3.0, SS
480384	1	PIN COTTER 3/16 x 1-1/2"
615213	1	PIN D22 X 70 LUBED F.EAGLE
615465	1	TRAPEZE ARM 80/90'
615477	1	PIN F.HINGE 80/90'
615484	1	HOOK ASSY 80/90'
615497	1	PIN D22 X 159 LUBED F.EAGLE
615662	1	SAFETY BAR F. TILT 80-90'
637062	1	HOOK GUIDE EAGLE
637429	1	H FRAME 80/90'
637430	1	SUSPENSION ARM RIGHT 80/90'
637431	1	SUSPENSION ARM LEFT 80/90'
637432	1	MOUNT LOWER H-FRAME 80'
637440	1	CENTER PART H-FRAME 80/90'
637443	1	OUTER FRAME F.CENTER 80'
637451	1	HINGE ASSY.LEFT 80/90'
637452	1	HINGE ASSY.RIGHT 80/90'
61008003	1	TRANSPORT HOOK CROSS BAR SPC-H

WWW.ROTRONIK.PL

parts-n°	order qty	description
78120100	1	CYLINDER TELESC.70/60/40
78122100	1	CYLINDER DOUBLE D50/25-298

WWW.ROLTRONIK.PL

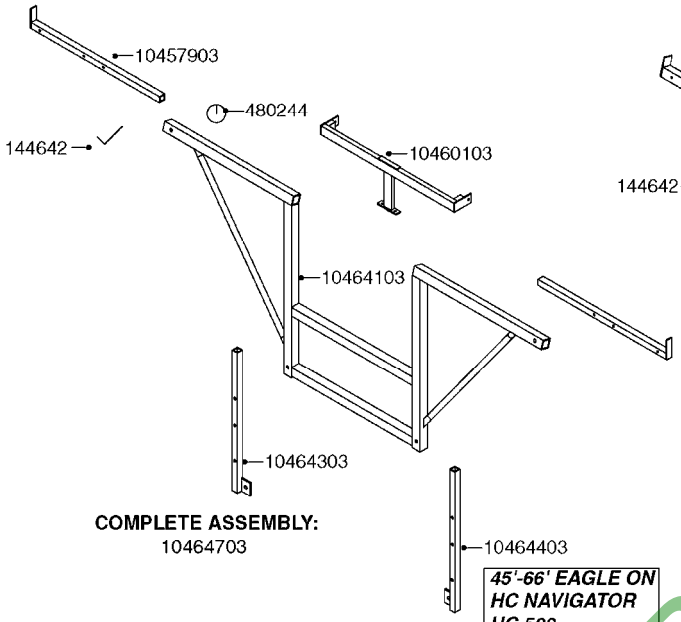

COMPLETE ASSEMBLY:
10464703

45'-66' EAGLE ON
HC NAVIGATOR
HC 500
HC 800
HC 1000

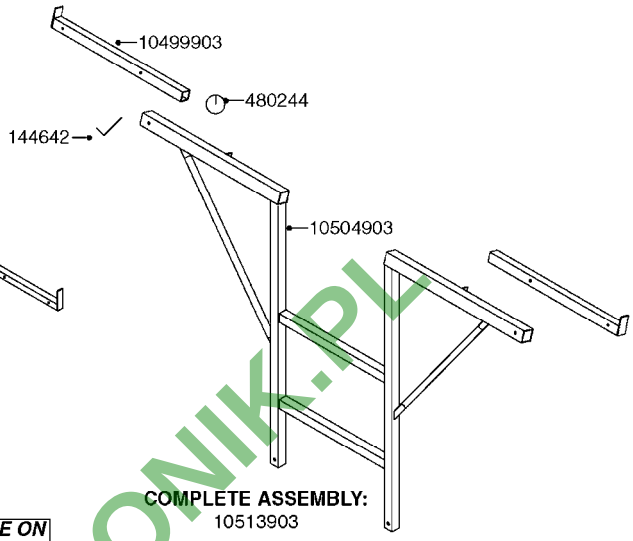

COMPLETE ASSEMBLY:
10513903

80'-90' EAGLE ON
NAVIGATOR TA & HC

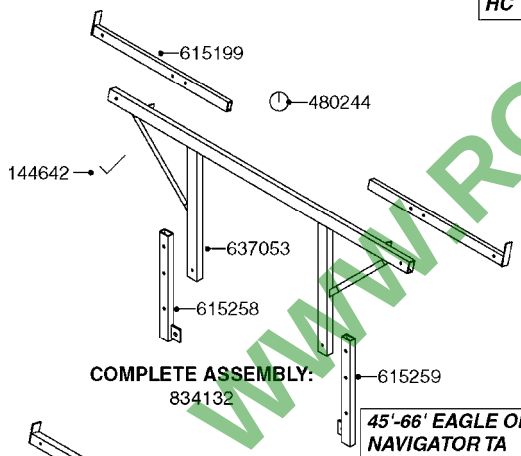

COMPLETE ASSEMBLY:
834132

45'-66' EAGLE ON
NAVIGATOR TA
TR 500 TA
TR 800 TA
TR 1000 TA

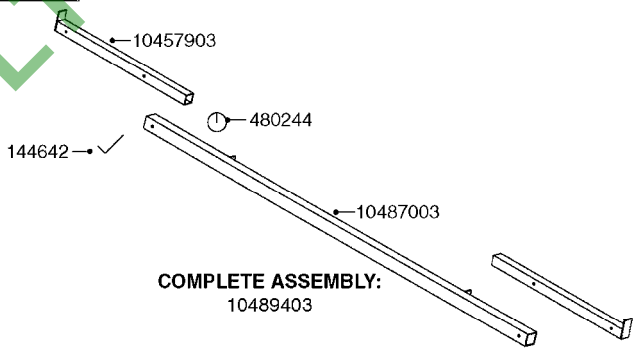

COMPLETE ASSEMBLY:
10489403

45'-66' EAGLE
ON HC 650M/ 950M

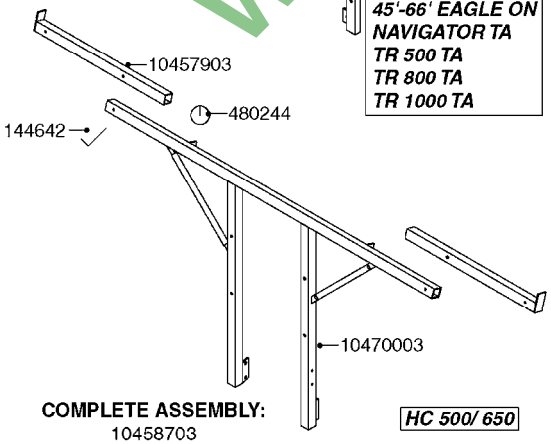

COMPLETE ASSEMBLY:
10458703

HC 500/ 650

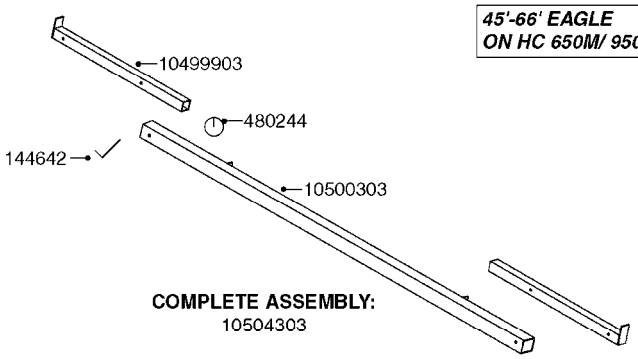

COMPLETE ASSEMBLY:
10504303

80'-90' EAGLE
ON HC 650M/ 950M

COMPLETE ASSEMBLIES
WHOLEGOODS ITEMS

D0510

WWW.ROLTRONIK.PL

TRANSPORT BRACKETS-EAGLE BOOM
D0510-HIN, 01:01:16

parts-n°	order qty	description
10457903	1	TRANSPORT ARM NAV.45-66'EAG
10458703	1	TRANSPORT BDL.HC650 EAGLE
10460103	1	HOOK LIFT BKT.F.NAV 45-66'
10464103	1	TRANS.BKT.NAV550/800/1000 EAG
10464303	1	TUBE F.TRANS.NAV550/800/1000RH
10464403	1	TUBE F.TRANS.NAV550/800/1000LH
10464703	1	TRANS.BDL.EAG.45-66 NAVM HC
10470003	1	FRONT TRANS.HC650 EAGLE (NEW)
10487003	1	TRANSPORT W/M HC950 EAGLE
10489403	1	TRANSPORT BDL.HC950 EAGLE
10499903	1	TRANSPORT ARM NAV 80/90'EAG
10500303	1	TRANSPORT W/M HC950 80/90'EAG
10504303	1	TRANSPORT KIT HC950 80/90'EAG
10504903	1	TRANSPORT BKT.NAV8/1000 80-90'
10513903	1	TRANS.BDL.80/90 NAV.800/1000
144642	1	LOCKING PAWL D10X65MM
480244	1	PIN SNAP D4.5
615199	1	TRANSPORT SLIDE ARM F.TA EAGLE
615258	1	TRANS.MOUNT BKT.LH TA EAGLE
615259	1	TRANS.MOUNT BKT.RH TA EAGLE
637053	1	TRANSPORT BRACKET F.TA EAGLE
834132	1	TRANS.EAG 45/66 TR500/NAV TA

WWW.ROLTRONIK.PL

SYNTAL

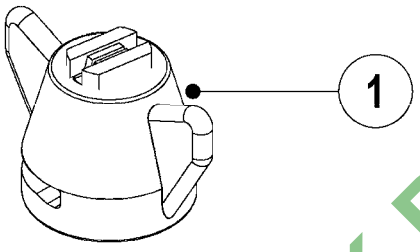

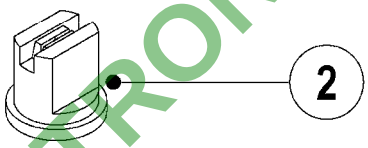

CERAMIC

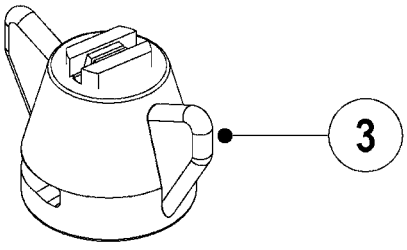

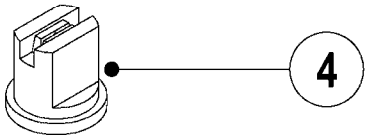

D1000

WWW.ROLTRONIK.PL

Pos.	parts-n°	order qty	description
1	371764	1	NOZZLE ISO CT F-01-110 ORANGE
1	371765	1	NOZZLE ISO CT F-015-110 GREEN
1	371766	1	NOZZLE ISO CT F-02-110 YELLOW
1	371767	1	NOZZLE ISO CT F-03-110 BLUE
1	371768	1	NOZZLE ISO CT F-04-110 RED
1	371769	1	NOZZLE ISO CT F-05-110 BROWN
1	371770	1	NOZZLE ISO CT F-06-110 GREY
1	371771	1	NOZZLE ISO CT F-08-110 WHITE
1	371950	1	NOZZLE ISO CT F-025-110 LILAC
1	371964	1	NOZZLE ISO CT F-075-110 PINK
1	371970	1	NOZZLE ISO CT F-10-110 LT BLUE
2	371706	1	NOZZLE ISO F-01-110 ORANGE
2	371707	1	NOZZLE ISO F-015-110 GREEN
2	371708	1	NOZZLE ISO F-02-110 YELLOW
2	371709	1	NOZZLE ISO F-03-110 BLUE
2	371710	1	NOZZLE ISO F-04-110 RED
2	371711	1	NOZZLE ISO F-05-110 BROWN
2	371712	1	NOZZLE ISO F-06-110 GREY
2	371713	1	NOZZLE ISO F-08-110 WHITE
2	371946	1	NOZZLE ISO F-025-110 LILAC
2	371963	1	NOZZLE ISO F-075-110 PINK
2	371966	1	NOZZLE ISO F-10-110 LT BLUE
3	371772	1	NOZZLE ISO CT F-015-110C GREEN
3	371773	1	NOZZLE ISO CT F-02-110C YELLOW
3	371774	1	NOZZLE ISO CT F-03-110C BLUE
3	371775	1	NOZZLE ISO CT F-04-110C RED
3	371776	1	NOZZLE ISO CT F-05-110C BROWN
3	371777	1	NOZZLE ISO CT F-06-110C GREY
4	371738	1	NOZZLE ISO F-015-110C GREEN
4	371739	1	NOZZLE ISO F-02-110C YELLOW
4	371740	1	NOZZLE ISO F-03-110C BLUE
4	371741	1	NOZZLE ISO F-04-110C RED
4	371742	1	NOZZLE ISO F-05-110C BROWN
4	371743	1	NOZZLE ISO F-06-110C GREY

WWW.BOTRONIK.PL

SYNTAL

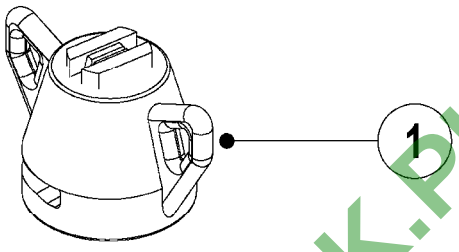

CERAMIC

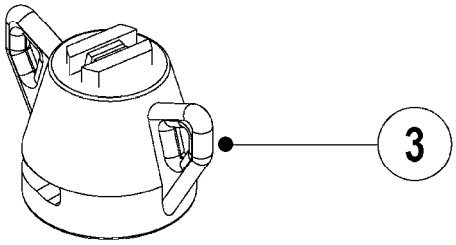

D1010

WWW.ROLTRONIK.PL

BOOM-NOZZLES 110° LOWDRIFT ISO
D1010-HIN, 01:01:16

Date 16.03.2016 13:35

Pos.	parts-n°	order qty	description
1	371837	1	NOZZLE ISO CT LD-01-110 ORANGE
1	371838	1	NOZZLE ISO CT LD-015-110 GREEN
1	371839	1	NOZZLE ISO CT LD-02-110 YELLOW
1	371840	1	NOZZLE ISO CT LD-03-110 BLUE
1	371841	1	NOZZLE ISO CT LD-04-110 RED
1	371894	1	NOZZLE ISO CT LD-05-110 BROWN
1	371958	1	NOZZLE ISO CT LD-025-110 LILAC
2	371817	1	NOZZLE ISO LD-01-110 ORANGE
2	371818	1	NOZZLE ISO LD-015-110 GREEN
2	371819	1	NOZZLE ISO LD-02-110 YELLOW
2	371820	1	NOZZLE ISO LD-03-110 BLUE
2	371821	1	NOZZLE ISO LD-04-110 RED
2	371893	1	NOZZLE ISO LD-05-110 BROWN
2	371957	1	NOZZLE ISO LD-025-110 LILAC
3	371842	1	NOZZLE ISO CT LD-01-110C ORANG
3	371843	1	NOZZLE ISO CT LD-015-110C GRN
3	371844	1	NOZZLE ISO CT LD-02-110C YELLO
3	371845	1	NOZZLE ISO CT LD-03-110C BLUE
3	371846	1	NOZZLE ISO CT LD-04-110C RED
3	371897	1	NOZZLE ISO CT LD-05-110C BROWN
4	371822	1	NOZZLE ISO LD-01-110C ORANGE
4	371823	1	NOZZLE ISO LD-015-110C GREEN
4	371824	1	NOZZLE ISO LD-02-110C YELLOW
4	371825	1	NOZZLE ISO LD-03-110C BLUE
4	371826	1	NOZZLE ISO LD-04-110C RED
4	371896	1	NOZZLE ISO LD-05-110C BROWN

WWW.ROLTRONIK.PL

SYNTAL

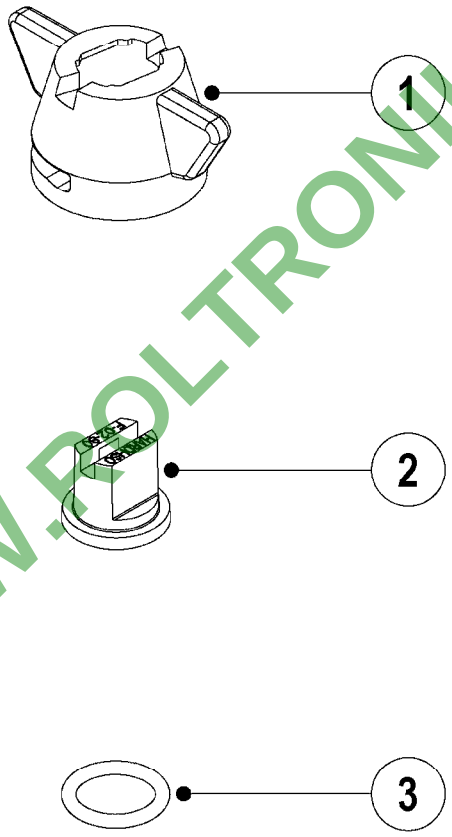

WWW.POLTRONIK.PL

D1020

BOOM-NOZZLES 80° FLAT FAN ISO
D1020-HIN, 01:01:16

Date 16.03.2016 13:35

Pos.	parts-n°	order qty	description
1	334083	1	SNAP-FIT NOZZLE HOLDER SS BLCK
2	371931	1	SYNTAL ISO F-01-80 TIP ORNG
2	371932	1	SYNTAL ISO F-015-80 TIP GREEN
2	371933	1	SYNTAL ISO F-02-80 TIP YELLOW
2	371934	1	SYNTAL ISO F-03-80 TIP BLUE
3	10423503	1	O-RING 9.12x3.53 NITRIL

WWW.ROLTRONIK.PL

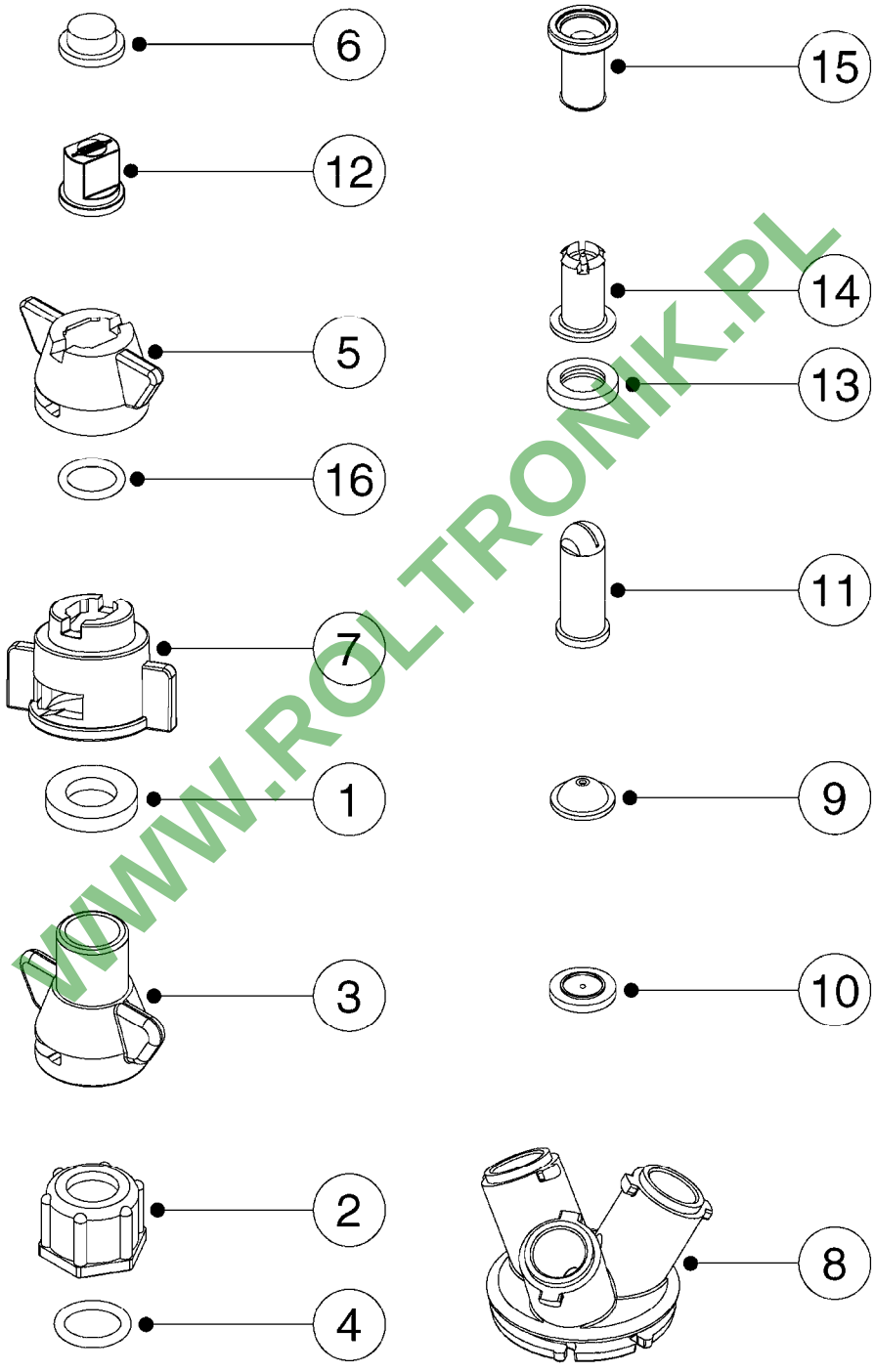

WWW.ROLTRONIK.PL

D1030

BOOM-NOZZLE CAPS AND FILTERS
D1030-HIN, 01:01:16

Date 16.03.2016 13:35

Pos.	parts-n°	order qty	description
1	242222	1	GASKET 19.0 X 10.0 X 3.3 EPDM
2	320187	1	FITT.DK CAP 3/8" BSP BLACK
2	321517	1	FITT.DK CAP 3/8" BSP WHITE
			ALWAYS USE WITH ISO AND INJET NOZZLES
2	321797	1	FITT.DK CAP 3/8' BSP BLUE
2	321801	1	FITT.DK CAP 3/8' BSP GREEN
2	321812	1	FITT.DK CAP 3/8' BSP RED
2	321823	1	FITT.DK CAP 3/8' BSP ORANGE
2	321834	1	FITT.DK CAP 3/8' BSP YELLOW
3	322068	1	SNAP-FIT ADAPTER THREAD. HARDI
4	330013	1	O-RING D15/D10X2.5 F.3/8"NUT
5	334083	1	SNAP-FIT NOZZLE HOLDER SS BLCK
6	334102	1	BLANK F.NOZZLE
7	334862	1	NOZZLE CAP TJBLACK F.ISO/INJET
8	334926	1	SNAP-FIT TURN PLATE F TRIPLET
9	370016	1	NOZZLE CONE JET 1553-08
9	370027	1	NOZZLE CONE JET 1553-10
9	370031	1	NOZZLE CONE JET 1553-12
9	370042	1	NOZZLE CONE JET 1553-14
9	370053	1	NOZZLE CONE JET 1553-16
9	370064	1	NOZZLE CONE JET 1553-18
9	370075	1	NOZZLE CONE JET 1553-20
9	370086	1	NOZZLE CONE JET 1553-22
9	370097	1	NOZZLE CONE JET 1553-24
9	370101	1	NOZZLE CONE JET 1553-30
9	370112	1	NOZZLE CONE JET 1553-35
9	370123	1	NOZZLE CONE JET 1553-40
10	370134	1	NOZZLE SWIRL 1554-GREY
10	370145	1	NOZZLE SWIRL 1554-BLACK
10	370156	1	NOZZLE SWIRL 1554-BLUE
10	370167	1	NOZZLE SWIRL 1554-1.3 WHITE
11	371551	1	NOZZ LRG DROP FLAT SPRAY SINGL
12	372140	1	HARDI ISO BLIND CAP
13	390639	1	O-RING F.NOZZLE FILTER
14	614366	1	FILTER 50 MESH F.NOZZLE BLUE
14	614367	1	FILTER 80 MESH F.NOZZLE RED
14	614368	1	FILTER 100 MESH F.NOZZLE YEL.
15	725042	1	SCREEN 80 MESH W.GASKET, RED
15	725043	1	SCREEN 50 MESH W.GASKET,BLUE
15	725044	1	SCREEN 100 MESH W.GASKET,YELLO
16	10423503	1	O-RING 9.12x3.53 NITRIL

WWW.ROLTRONIK.PL

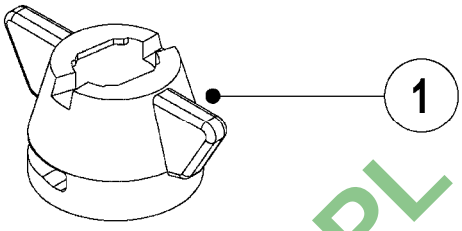

INJET Nozzle SYNTAL

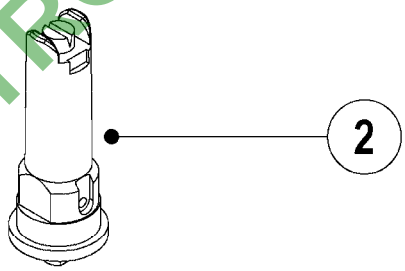

B-JET Nozzle SYNTAL

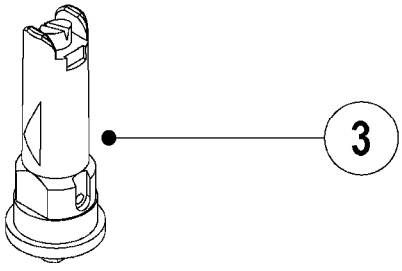

D1040

WWW.ROLTRONIK.PL

BOOM-NOZZLES INJET
D1040-HIN, 01:01:16

Pos.	parts-n°	order qty	description
1	334083	1	SNAP-FIT NOZZLE HOLDER SS BLCK
2	371872	1	NOZZLE INJET 015 GREEN SINGLE
2	371873	1	NOZZLE INJET 02 YELLOW SINGLE
2	371874	1	NOZZLE INJET 025 LILAC SINGLE
2	371875	1	NOZZLE INJET 03 BLUE SINGLE
2	371876	1	NOZZLE INJET 04 RED SINGLE
2	371926	1	NOZZLE INJET 01 ORANGE SINGLE
2	371927	1	NOZZLE INJET 05 BROWN SINGLE
2	371928	1	NOZZLE INJET 06 GREY SINGLE
2	371929	1	NOZZLE INJET 08 WHITE SINGLE
3	371870	1	NOZZLE B-JET 03 BLUE
3	371871	1	NOZZLE B-JET 04 RED
3	371877	1	NOZZLE B-JET 025 LILAC
3	371930	1	NOZZLE B-JET 02 YELLOW

WWW.ROLTRONIK.PL

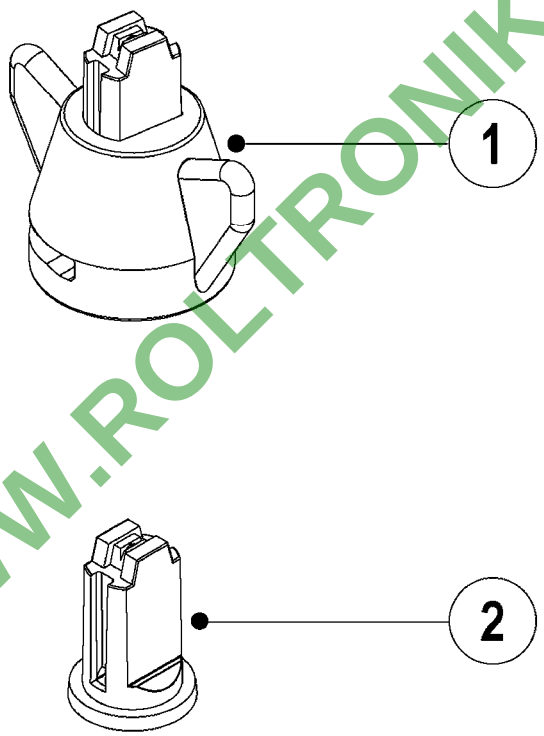

WWW.ROLTRONIK.PL

D1050

BOOM-NOZZLES MINIDRIFT
D1050-HIN, 01:01:16

Date 16.03.2016 13:35

Pos.	parts-n°	order qty	description
1	372121	1	NOZZLE ISO CT MD-015-110 GREEN
1	372122	1	NOZZLE ISO CT MD-02-110 YELLOW
1	372123	1	NOZZLE ISO CT MD-025-110 LILAC
1	372124	1	NOZZLE ISO CT MD-03-110 BLUE
1	372125	1	NOZZLE ISO CT MD-04-110 RED
1	372126	1	NOZZLE ISO CT MD-05-110 BROWN
2	372111	1	NOZZLE ISO MD-015-110 GREEN
2	372112	1	NOZZLE ISO MD-02-110 YELLOW
2	372113	1	NOZZLE ISO MD-025-110 LILAC
2	372114	1	NOZZLE ISO MD-03-110 BLUE
2	372115	1	NOZZLE ISO MD-04-110 RED
2	372116	1	NOZZLE ISO MD-05-110 BROWN

WWW.ROLTRONIK.PL

BOOM-NOZZLES QUINTASTREAM
D1060-HIN, 01:01:16

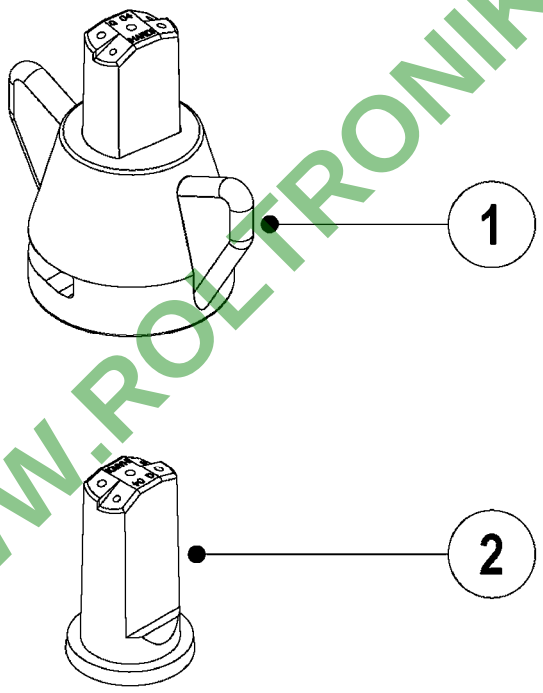

WWW.ROLTRONIK.PL

D1060

BOOM-NOZZLES QUINTASTREAM
D1060-HIN, 01:01:16

Date 16.03.2016 13:35

Pos.	parts-n°	order qty	description
1	372011	1	NOZZLE ISO QS-015-5H GREEN
1	372012	1	NOZZLE ISO QS-02-5H YELLOW
1	372013	1	NOZZLE ISO QS-03-5H BLUE
1	372014	1	NOZZLE ISO QS-04-5H RED
1	372015	1	NOZZLE ISO QS-05-5H BROWN
1	372016	1	NOZZLE ISO QS-06-5H GREY
1	372017	1	NOZZLE ISO QS-08-5H WHITE
1	372018	1	NOZZLE ISO QS-10-5H LT. BLUE
1	372019	1	NOZZLE ISO QS-15-5H LT. GREEN
2	372002	1	ISO QNTSTRM 015 S-GREEN
2	372003	1	ISO QNTSTRM 02 S-YELLOW
2	372004	1	ISO QNTSTRM 03 S-BLUE
2	372005	1	ISO QNTSTRM 04 S-RED
2	372006	1	ISO QNTSTRM 05 S-BROWN
2	372007	1	ISO QNTSTRM 06 S-GREY
2	372008	1	ISO QNTSTRM 08 S-WHITE
2	372009	1	ISO QNTSTRM 10 S-LT.BLU
2	372010	1	ISO QNTSTRM 15 S-LT.GRN

WWW.ROLTRONIK.PL

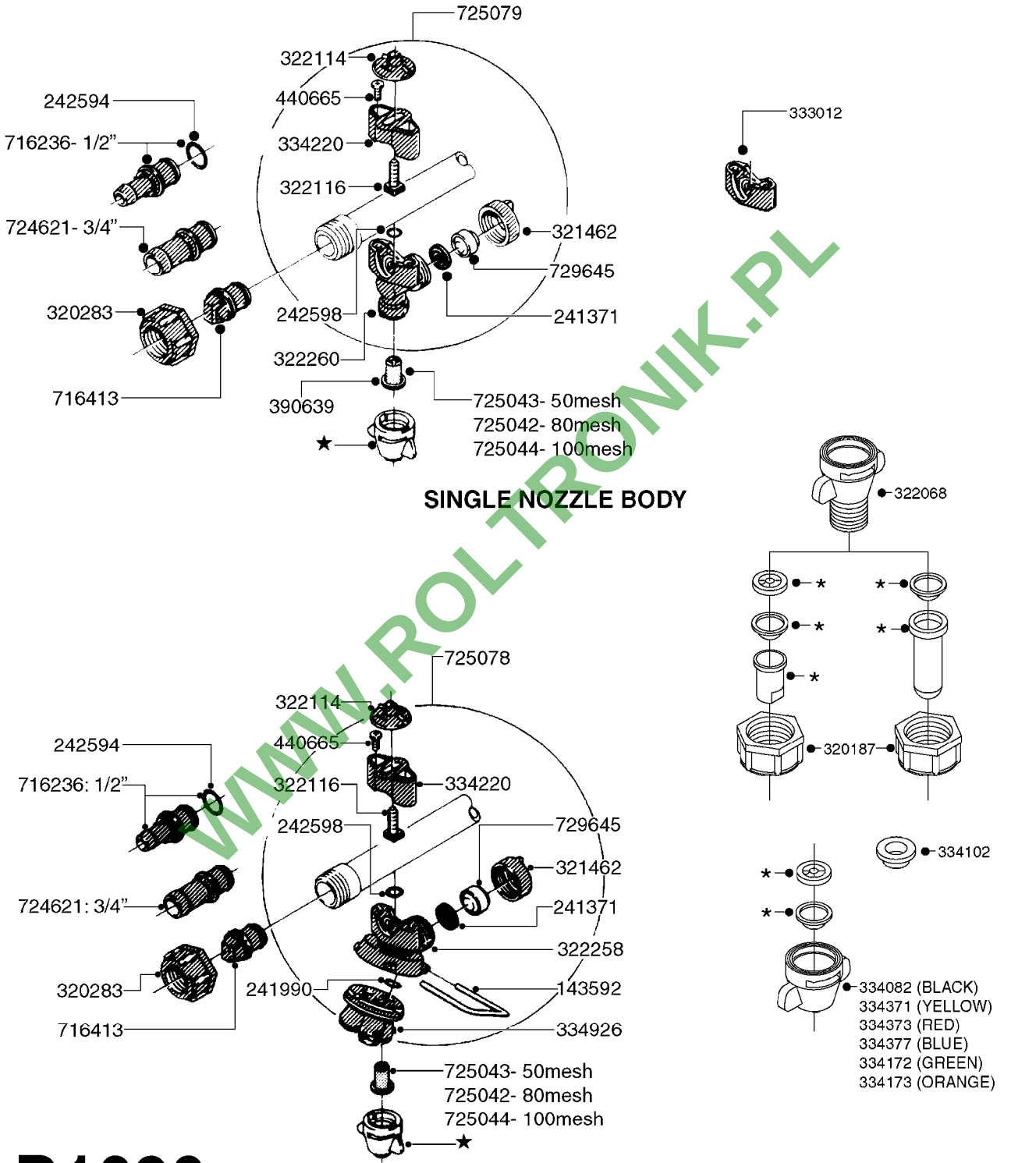

SINGLE NOZZLE BODY

TRIPLET NOZZLE BODY

D1090

*=REFER TO HARDI NOZZLE CATALOG

WWW.ROLTRONIK.PL

NOZZLE BODIES-SNAP FIT
D1090-HIN, 01:01:16

parts-n°	order qty	description
143592	1	LOCK CLAMP FOR TRIPLET
241371	1	DIAPHRAGM, NO-DRIP alt 241371
241990	1	O-RING D9.3 X 2.4 VITON
242594	1	O-RING D14 X 1.78 SCH.70-EPDM
242598	1	O-RING D7.0 X 2.5 NITRIL
320187	1	FITT.DK CAP 3/8" BSP BLACK
320283	1	FITT.DK NUT 3/4"BSP
321462	1	CAP F.NO-DRIP ASSY.
322068	1	SNAP-FIT ADAPTER THREAD. HARDI
322114	1	NUT PLASTIC F.NOZZ.H
322116	1	BOLT PLASTIC F.NOZZ.H.
322258	1	HOUSING F.TRIPLET
322260	1	NOZZLE HOLDER LOWER PART
333012	1	NOZZLE HOLD. UPPER PART
334082	1	SNAP-FIT NOZZ.HOLD.CONE BLACK
334102	1	BLANK F.NOZZLE
334172	1	SNAP-FIT NOZZ.HOLD.CONE GREEN
334173	1	SNAP-FIT NOZZ.HOLD.CONE ORANGE
334220	1	YOKE, UPPER NOZZLE BODY
334371	1	SNAP-FIT NOZZLE HOLDER YELLOW
334373	1	SNAP-FIT NOZZLE HOLDER RED
334377	1	SNAP-FIT NOZZLE HOLDER BLUE
334926	1	SNAP-FIT TURN PLATE F TRIPLET
390639	1	O-RING F.NOZZLE FILTER
440665	1	SCREW M4.2X16 STAINLESS
716236	1	FITT.DK HB 1/2" ASSY. F. 3/4"
716413	1	FITT.DK PLUG ASSY. F.NOZ TUBE
724621	1	FITT.DK HB 3/4"ASSY F.3/4" NUT
725042	1	SCREEN 80 MESH W.GASKET, RED
725043	1	SCREEN 50 MESH W.GASKET,BLUE
725044	1	SCREEN 100 MESH W.GASKET,YELLO
725078	1	SNAP-FIT TRIPLET W/O NOZZ HOLD
725079	1	NOZZLE ASSY.SING.SNAP-FIT GREN
729645	1	NON-DRIP SPRING ASSY.GREEN 10

WWW.RO-TRONIK.PL

HARDI	**Agroparts: www.HARDI-INTERNATIONAL.com**	
	DOUBLE NOZZLE HOLDER-SNAP FIT D1100-HIN, 01:01:16	Page 0 Date 16.03.2016 13:35

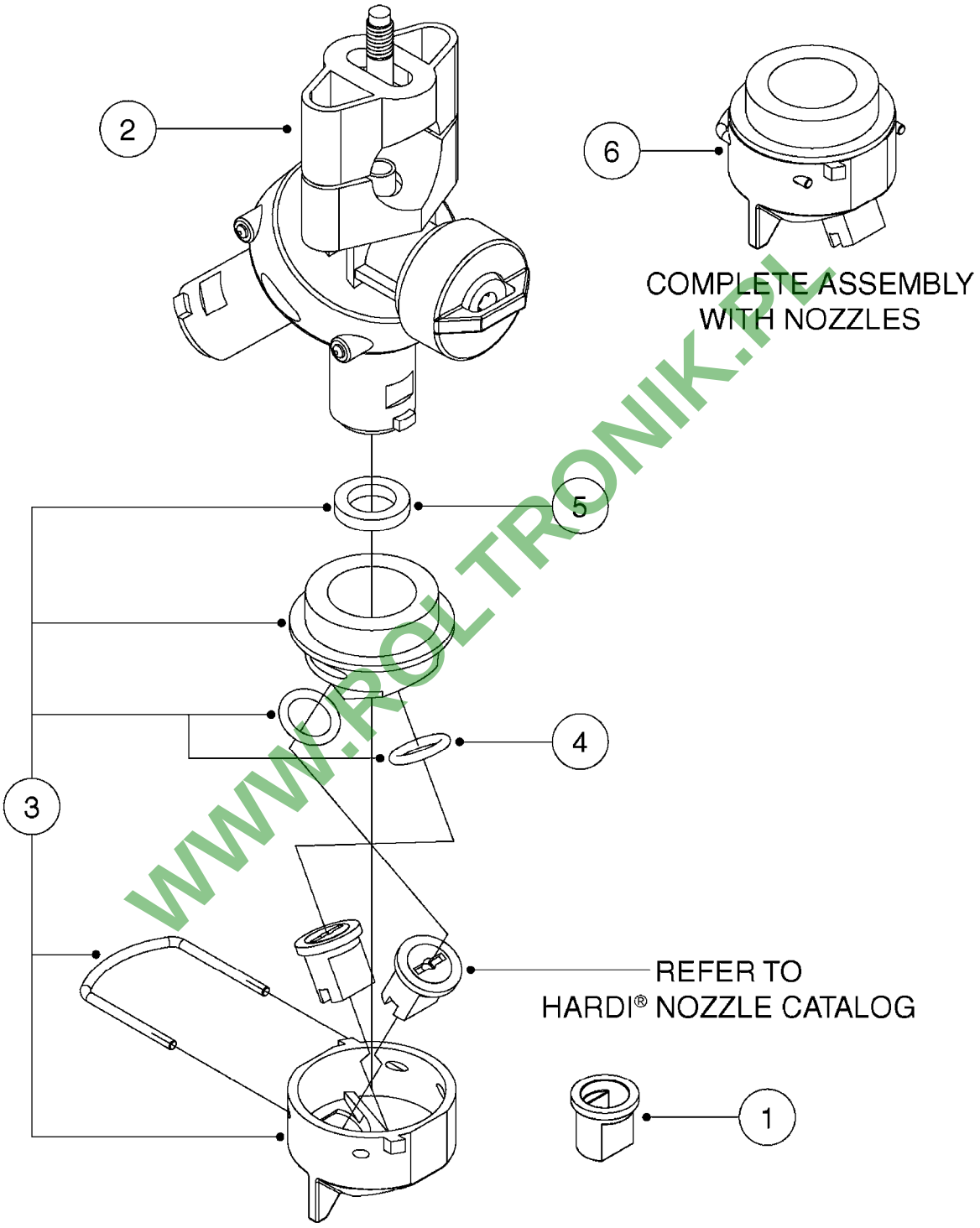

WWW.ROLTRONIK.PL

D1100

DOUBLE NOZZLE HOLDER-SNAP FIT
D1100-HIN, 01:01:16

Date 16.03.2016 13:35

Pos.	parts-n°	order qty	description
1	372140	1	HARDI ISO BLIND CAP
2	725078	1	SNAP-FIT TRIPLET W/O NOZZ HOLD
3	28032503	1	DOUBLE NOZZLE HOLDER LD ISO
4	28040103	1	O-RING F.DOUBLE NOZZLE HOLDER
5	28089103	1	GASKET F.DOUBLE NOZZLE HOLDER
6	70056803	1	DOUBLE NOZZLE CAP ORANGE LD 01
6	70056903	1	DOUBLE NOZZLE CAP GREEN LD 015
6	70057003	1	DOUBLE NOZZLE CAP YELLOW LD 02
6	70057103	1	DOUBLE NOZZLE CAP LILAC LD 025
6	70057203	1	DOUBLE NOZZLE CAP BLUE LD 03
6	70057303	1	DOUBLE NOZZLE CAP RED LD 04
6	70057403	1	DOUBLE NOZZLE CAP BROWN LD 05

WWW.ROLTRONIK.PL

NOZZLE TUBES & HOLDER-PLASTIC
D1110-HIN, 01:01:16

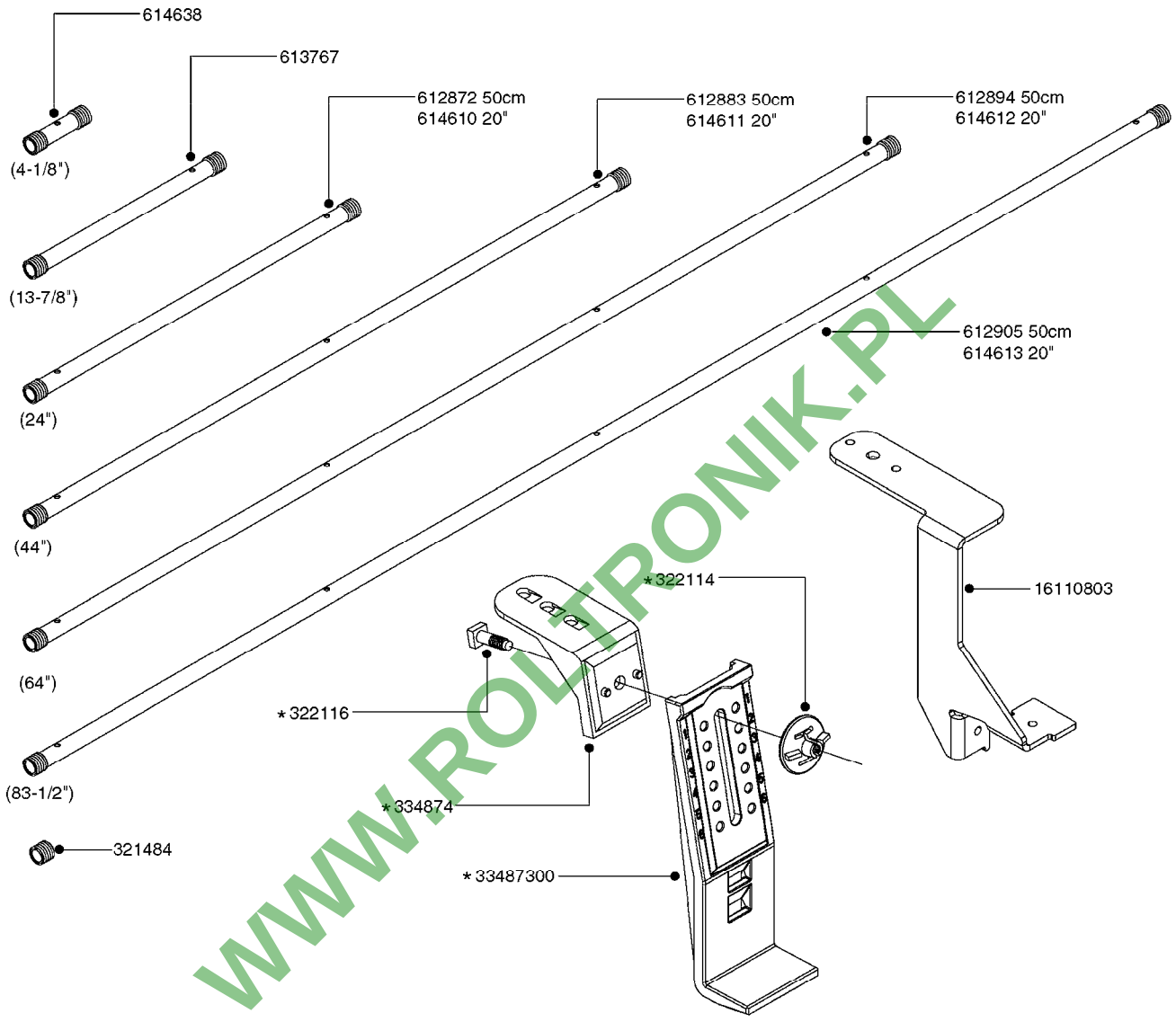

WWW.ROLTRONIK.PL

*741685 - BAG OF 5 COMPLETE
*741688 - BAG OF 10 COMPLETE

STAINLESS CLAMPS AND INSULATOR
100X60MM - 741778 BAG OF 10

80X60MM - 741741 BAG OF 10	80X60MM - 741738 BAG OF 5
50X50MM - 741737 BAG OF 10	50X50MM - 741734 BAG OF 5
50X30MM - 741733 BAG OF 10	50X30MM - 741730 BAG OF 5

BLANK TUBES:	DIMPLED TUBES:	
614647 - 23-3/4"	615468 - 24-1/2"	615471 - 64"
614648 - 43-1/4"	615469 - 44"	615472 - 74-1/4"
614649 - 63"	615470 - 54-1/8"	615473 - 92"
614650 - 82-1/2"		

D1110

NOZZLE TUBES & HOLDER-PLASTIC
D1110-HIN, 01:01:16

Date 16.03.2016 13:35

parts-n°	order qty	description
321484	1	BUSHING THREADED F.NOZZ.TUBE
322114	1	NUT PLASTIC F.NOZZ.H
322116	1	BOLT PLASTIC F.NOZZ.H.
334874	1	NOZZLE HOLDER - TOP HALF
612872	1	NOZZLE TUBE 2 HOLE L-24"/50CM
612883	1	NOZZLE TUBE 3 HOLE L-44"/50CM
612894	1	NOZZLE TUBE 4 HOLE L-64"/50CM
612905	1	NOZZLE TUBE 5 HOLE L-83.5"/50C
613767	1	NOZZLE TUBE 1 HOLE L-13.875"
614610	1	NOZZLE TUBE 2 HOLE L-24"/SP20"
614611	1	NOZZLE TUBE 3 HOLE L-44"/SP20"
614612	1	NOZZLE TUBE 4 HOLE L-64"/SP20"
614613	1	NOZZLE TUBE 5 HOLE L-83.5"/20"
614638	1	NOZZLE TUBE 1 HOLE L-4.125"
614647	1	NOZZLE TUBE L=600mm NO HOLES
614648	1	NOZZLE TUBE L=1100mm NO HOLES
614649	1	NOZZLE TUBE L=1600mm NO HOLES
614650	1	NOZZLE TUBE L=2100mm NO HOLES
615468	1	NOZZLE TUBE MARKED 1" 24"
615469	1	NOZZLE TUBE MARKED 1" 44"
615470	1	NOZZLE TUBE MARKED 1" 54"
615471	1	NOZZLE TUBE MARKED 1" 64"
615472	1	NOZZLE TUBE MARKED 1" 74"
615473	1	NOZZLE TUBE MARKED 1" 92"
741685	1	NOZZLE HOLDER COMPLETE/5 PCS
741688	1	NOZZLE HOLDER COMPLETE/10PCS
741730	1	CLAMP,NZLE BKT BAG OF 5 50X30
741733	1	CLAMP,NZLE BKT BAG OF 10 50X30
741734	1	CLAMP,NZLE BKT BAG OF 5 50X50
741737	1	CLAMP,NZLE BKT BAG OF 10 50X50
741738	1	CLAMP,NZLE BKT BAG OF 5 80X60
741741	1	CLAMP,NZLE BKT BAG OF 10 80x60
741778	1	CLAMP,NZL BKT BAG OF 10 100x60
16110803	1	NOZZLE BRACKET VAR SPACINGS
33487300	1	NOZZLE HOLDER - BOTTOM HALF

WWW.BOLTRONIK.PL

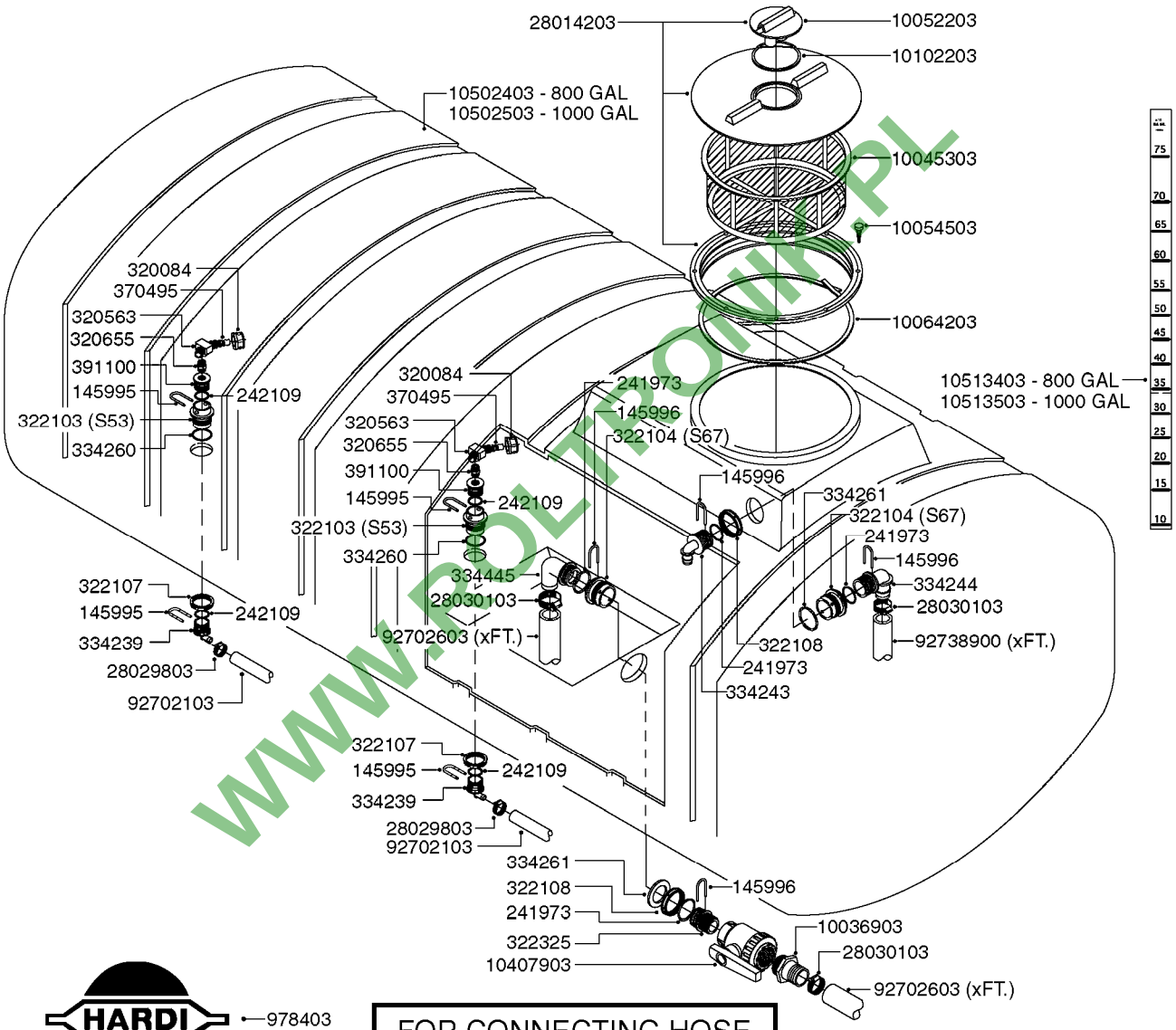

FOR CONNECTING HOSE FITTINGS, SEE SECTION L

E0460

WWW.ROLTRONIK.PL

HARDI	**Agroparts: www.HARDI-INTERNATIONAL.com**	
	TANK-800/1000 NAV&NAV M-CENT. E0460-HIN, 01:01:16	Page 1 Date 16.03.2016 13:35

parts-n°	order qty	description
145995	1	FITT.DK S-53 FORK
145996	1	FITT.DK S-67 FORK
241973	1	O-RING 44.2 x 3.0 (use-242353)
242109	1	O-RING D32.2x3.0 (USE 242354)
320084	1	FITT.DK NUT 1/2" BSP
320563	1	FITT.DK 3 WAY 1/2" 110 DEG.
320655	1	FITT.DK HN 1/2"-1/2" BSP
322103	1	FITT.DK S-53 BULKHEAD
322104	1	FITT.DK S-67 BULKHEAD
322107	1	FITT.DK S-53 BULKHEAD NUT
322108	1	FITT.DK S-67 BULKHEAD NUT
322325	1	FITT.DK S-67 X 1-1/2"BSP LONG
334239	1	FITT.DK S-53 ELB.1/2"
334243	1	FITT.DK S-67 ELB.1"
334244	1	FITT.DK S-67 ELB.1-1/4"
334260	1	GASKET F. S-53 BULKHEAD
334261	1	GASKET F. S-67 BULKHEAD
334445	1	FITT.DK S-67 ELB.1-1/2"
370495	1	NOZZLE INJECTOR 5066-3.0
391100	1	FITT.DK S-53THREAD INS.1/2"BSP
978403	1	DECAL COMPANY 280 X 450
10036903	1	FITT.PO.HB 1.50X1.50 IMB1212
10045303	1	FILTER BASKET 16"
10052203	1	LID VENT ASSY
10054503	1	SCREW 3/4" SELF TAPPING
10064203	1	SET SEALING SPONGE 1 Ft BULK
10102203	1	GASKET F.16" LID BREATHER
10407903	1	BALL VALVE 1-1/2" MCPHEE
10502403	1	TANK RAW NAV.800 GAL.
10502503	1	TANK RAW NAV.1000 GAL.
10513403	1	DECAL SCALE 800 GAL.
10513503	1	DECAL SCALE 1000 GAL
28014203	1	LID ASSY. (3-PC.) 16" ARAG
28029803	1	CLAMP HOSE GEAR P1/2" 6708
28030103	1	CLAMP HOSE GEAR P5/4-S1.5"6724
92702103	1	HOSE R X1/2" X300PSI WP X0012"
92702603	1	HOSE PVC SUCT GRAY 1-1/2"
92738900	1	HOSE R X PVC X 1-1/4" 0012"

WWW.ROLTRONIK.PL

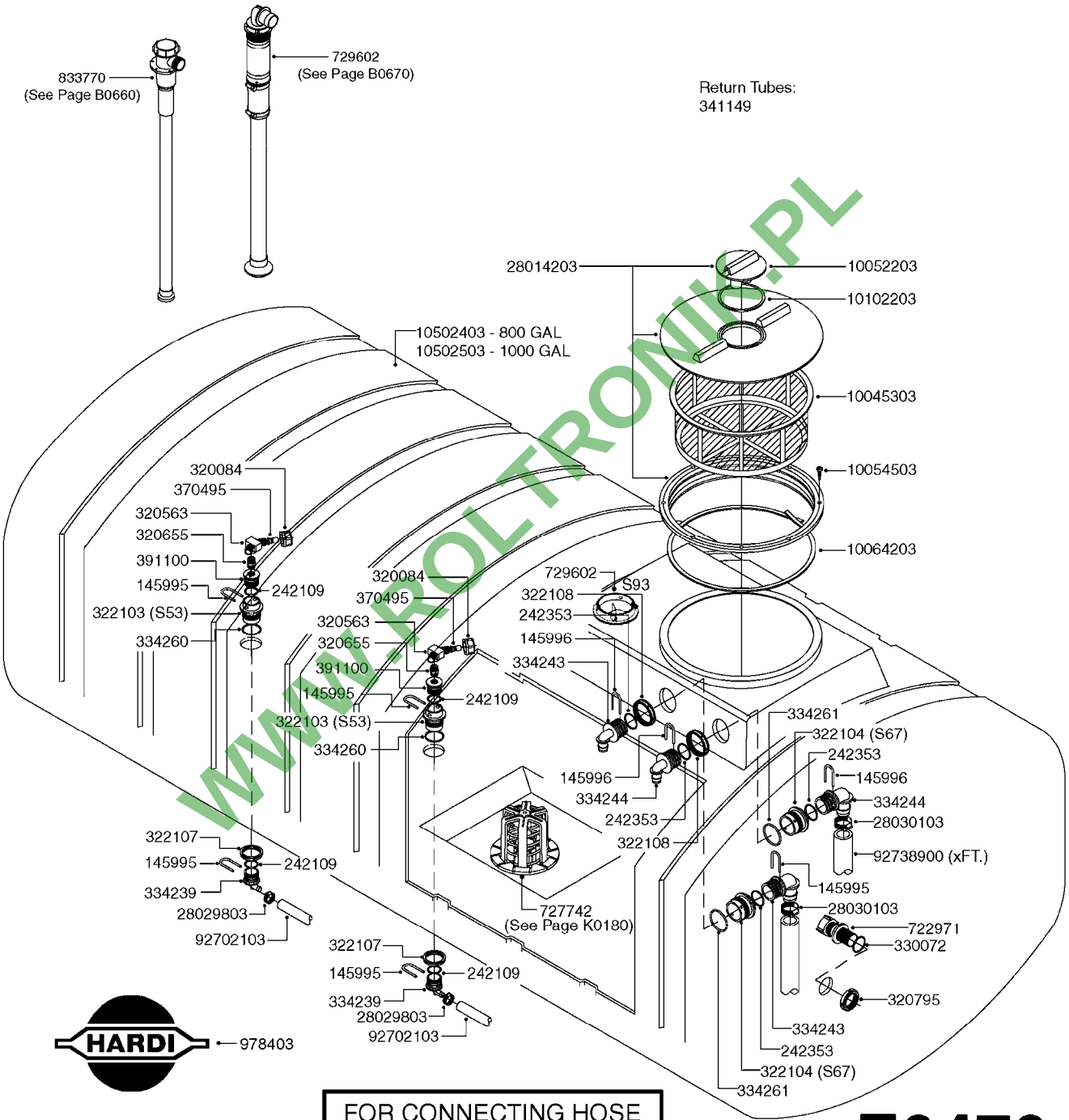

FOR CONNECTING HOSE FITTINGS, SEE SECTION L

E0470

WWW.ROLTRONIK.PL

parts-n°	order qty	description
145995	1	FITT.DK S-53 FORK
145996	1	FITT.DK S-67 FORK
242109	1	O-RING D32.2x3.0 (USE 242354)
242353	1	O-RING D44.2X3.0 VITON F.S-67
320084	1	FITT.DK NUT 1/2" BSP
320563	1	FITT.DK 3 WAY 1/2" 110 DEG.
320655	1	FITT.DK HN 1/2"-1/2" BSP
320795	1	FITT.DK NUT 1-1/2" BSP JAMB
322103	1	FITT.DK S-53 BULKHEAD
322104	1	FITT.DK S-67 BULKHEAD
322107	1	FITT.DK S-53 BULKHEAD NUT
322108	1	FITT.DK S-67 BULKHEAD NUT
330072	1	O-RING D53.5/D45.5X4
334239	1	FITT.DK S-53 ELB.1/2"
334243	1	FITT.DK S-67 ELB.1"
334244	1	FITT.DK S-67 ELB.1-1/4"
334260	1	GASKET F. S-53 BULKHEAD
334261	1	GASKET F. S-67 BULKHEAD
341149	1	RETURN TUBE Ø40 L=2000
370495	1	NOZZLE INJECTOR 5066-3.0
391100	1	FITT.DK S-53THREAD INS.1/2"BSP
722971	1	SAFETY VALVE SCF 217PSI(15BAR)
727742	1	TOP DRAIN CORD TYPE
729602	1	TOP SUCTION KIT NAV 2"
833770	1	TOP SUCTION KIT 300/500
978403	1	DECAL COMPANY 280 X 450
10045303	1	FILTER BASKET 16"
10052203	1	LID VENT ASSY
10054503	1	SCREW 3/4" SELF TAPPING
10064203	1	SET SEALING SPONGE 1 Ft BULK
10102203	1	GASKET F.16" LID BREATHER
10502403	1	TANK RAW NAV.800 GAL.
10502503	1	TANK RAW NAV.1000 GAL.
28014203	1	LID ASSY (3-PC.) 16" ARAG
28029803	1	CLAMP HOSE GEAR P1/2" 6708
28030103	1	CLAMP HOSE GEAR P5/4-S1.5"6724
92702103	1	HOSE R X1/2" X300PSI WP X0012"
92738900	1	HOSE R X PVC X 1-1/4" 0012"

WWW.FOLTRONIK.PL

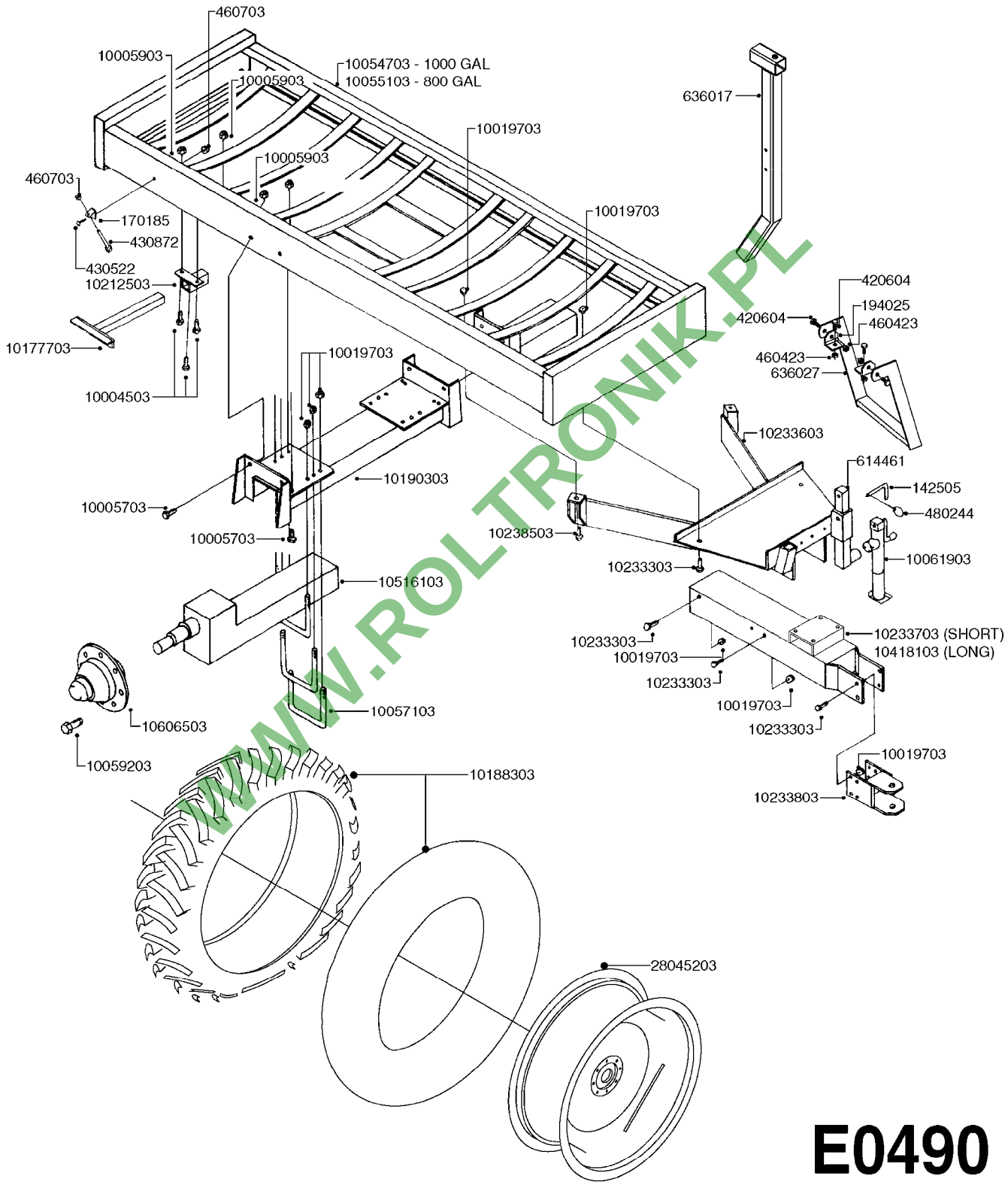

WWW.ROLTRONIK.PL

E0490

parts-n°	order qty	description
142505	1	LOCKING PAWL 12 X 70MM
170185	1	ANGLE BRACKET F. TANKSTRAP
194025	1	BRACKET F.STEP HC650
420604	1	BOLT HEX 8.8 DEL M10X25 FT DIN933
430522	1	BOLT HEX 8.8 DEL M12X25 FT
430872	1	BOLT HEX 8.8 DEL M12X100 FT
460423	1	NUT HEX M10X1.5 LOCK
460703	1	NUT HEX M12X1.75 LOCK DIN985
480244	1	PIN SNAP D4.5
614461	1	JACK STAND ATTACHMENT
636017	1	POST FOR EC CONTROL MOUNT
636027	1	STEP F.PLATFORM HC650
10004503	1	BOLT HEX 1/2 NC GR.5 01.50"
10005703	1	BOLT HEX 5/8 NC GR.2 01.50"
10005903	1	NUT HEX NC 5/8" NYLOCK
10019703	1	NUT HEX NC FHN 3/4-10 Z 5
10054703	1	FRAME W/M TR1000
10055103	1	FRAME W/M TR800
10057103	1	BOLT U 3/4 NC 7-7/8IWX7-1/4IL
10059203	1	BOLT WHEEL 9/16"x1-1/4"UNF 90D
10061903	1	JACK F300/500/575 5000LB
10177703	1	SCRAPER MUD ICM VS 500
10188303	1	TIRE 13.6" X 38"
10190303	1	AXLE STRUT W/M 800 GAL.SINGLE
10212503	1	BKT.MUD SCRAPER ICM 500
10233303	1	BOLT HEX 3/4 NC GR.5 02.00"
10233603	1	A FRAME & STEP 800/1000
10233703	1	TONGUE 800/1000
10233803	1	HITCH 800/1000
10238503	1	BOLT HEX 3/4 NC GR.5 02.50"
10418103	1	TONGUE TR800/1000
10516103	1	INSERT W/M 800HC W/SPINDLE
10606503	1	HUB ASSY.NAV550/800/1000 HC
28045203	1	RIM 38X12 8/8/6 1.06-OS GRAY

WWW.OLTRONIK.PL

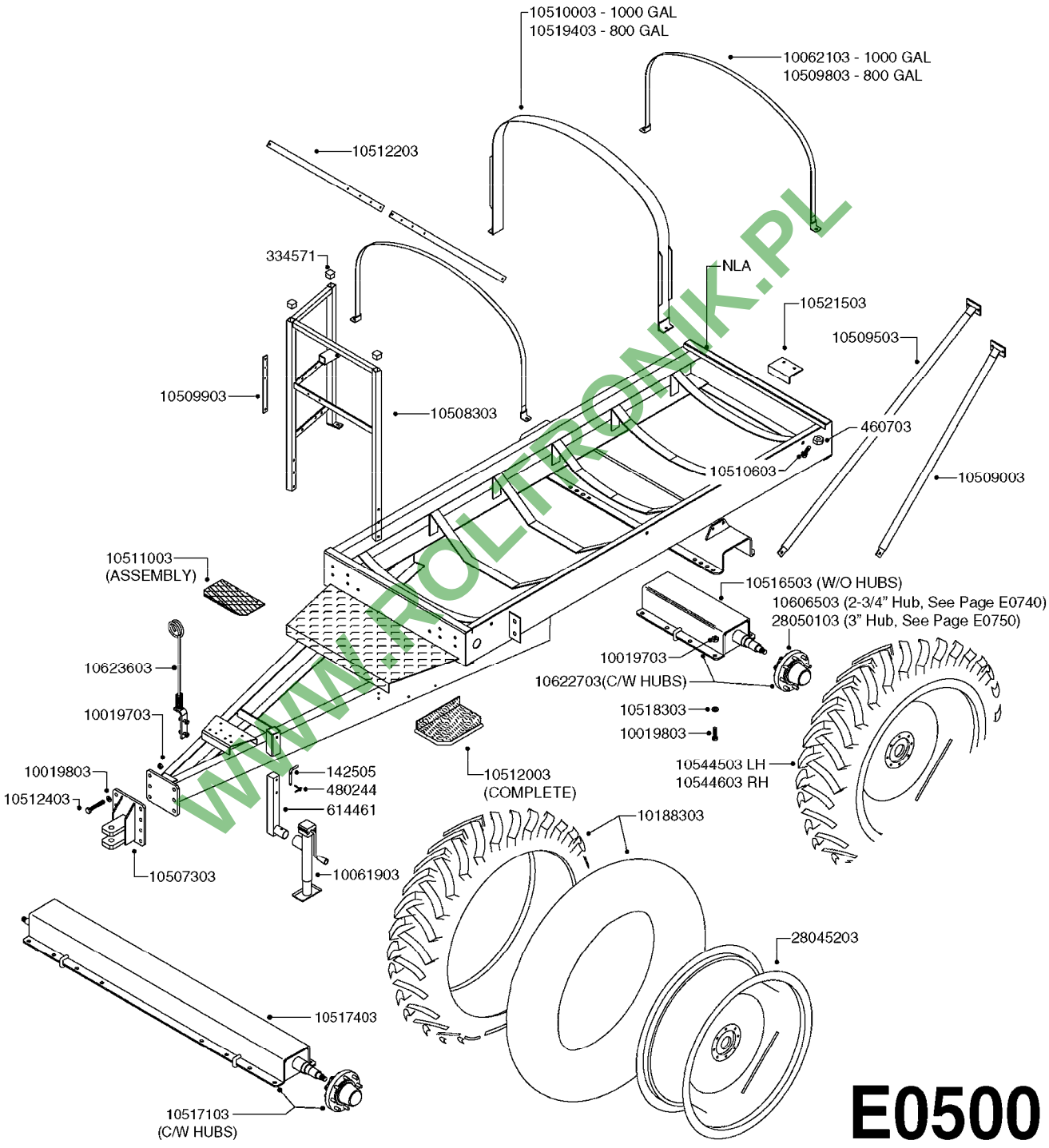

WWW.ROLTRONIK.PL

FRAME - NAVIGATOR HC 800/1000
E0500-HIN, 01:01:16

parts-n°	order qty	description
142505	1	LOCKING PAWL 12 X 70MM
334571	1	TAPON 40x40x2 EMBELLECEDOR
460703	1	NUT HEX M12X1.75 LOCK DIN985
480244	1	PIN SNAP D4.5
614461	1	JACK STAND ATTACHMENT
10019703	1	NUT HEX NC FHN 3/4-10 Z 5
10019803	1	WASHER LOCK L/W Z 3/4"
10061903	1	JACK F300/500/575 5000LB
10062103	1	STRAP F. NAV M TNK 1000 110"LG
10188303	1	TIRE 13.6" X 38"
10507303	1	CLEVIS NAV.550/800/1000 GAL.
10508303	1	HANDRAIL NAV 800/1000 GAL.
10509003	1	SIDE BRACE NAV8/1000 45-66'EAG
10509503	1	SIDE BRACE NAV8/1000 80-90'EAG
10509803	1	STRAP F.NAV TANK 800 GAL.
10509903	1	FLATBAR F.FILTER
10510003	1	STRAP F.TANK REINFOR.1000 NAV
10510603	1	BOLT F.ANCHOR STRAP
10511003	1	FRONT STEP ASSY.550/800/1000
10512003	1	SIDE STEP ASSY.550/800/1000
10512203	1	FLATBAR SIDE STRAP F.NAV8/1000
10512403	1	BOLT HEX 3/4 NC GR.8 02.25"
10516503	1	INSERT W/M NAV HC W/SPINDLE INCLUDES 3" SPINDLE
10517103	1	AXLE ASSY NAV M 1000 HC 120"
10517403	1	AXLE W/M NAV.HC 120"W/SPINDLES
10518303	1	BOLT HEX 2&3/4 NC GR.8 3.00"
10519403	1	STRAP F.TANK REINFOR.800 NAV
10521503	1	NAV TANK STOP BKT.KIT
10544503	1	TIRE ASSY 13.6 X 38 LH 8BLT HD
10544603	1	TIRE ASSY 13.6 X 38 RH 8BLT HD
10606503	1	HUB ASSY.NAV550/800/1000 HC CONFIRM 2-3/4" SPINDLE
10622703	1	AXLE ASSY NAV M 1000 HC 72-88" INCLUDES 3" SPINDLE
10623603	1	CABLE & HOSE HOLDER NAV.
28045203	1	RIM 38X12 8/8/6 1.06-OS GRAY
28050103	1	HUB F 3" 758 7500# PACKAGE CONFIRM 3" SPINDLE

WWW.PCLTRONIK.PL

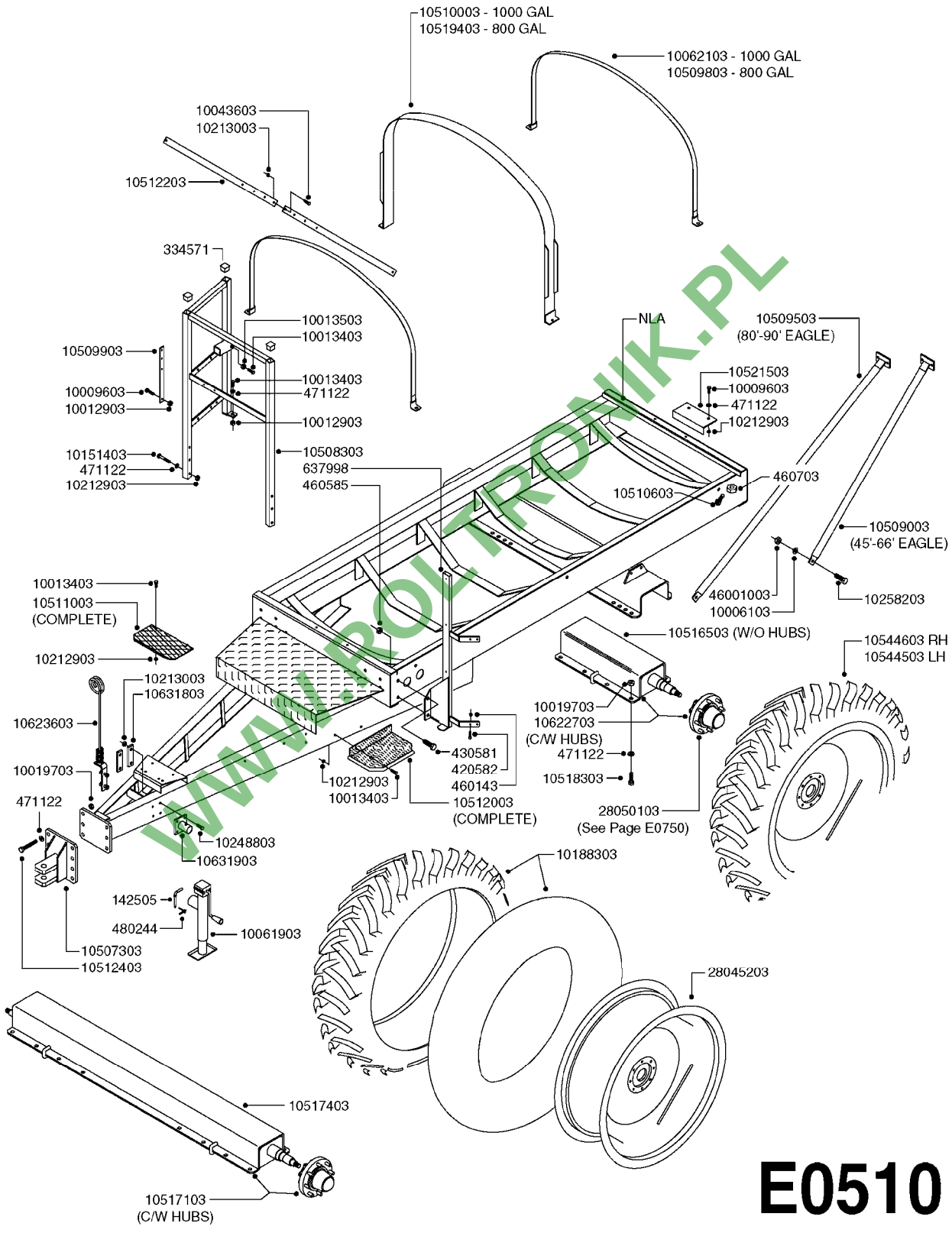

E0510

WWW.ROLTRONIK.PL

parts-nº	order qty	description
142505	1	LOCKING PAWL 12 X 70MM
334571	1	TAPON 40x40x2 EMBELLECEDOR
420582	1	BOLT HEX 8.8 DEL M8X20 FT A2
430581	1	BOLT HEX 8.8 DEL M16X40 FT
460143	1	NUT HEX M8 LOCK A2 DIN985
460585	1	NUT HEX M16X2 LOCK
460703	1	NUT HEX M12X1.75 LOCK DIN985
471122	1	WASHER, M10, Ø20/10.5X 2.0, SS
480244	1	PIN SNAP D4.5
637998	1	MANIFOLD BKT. NAVIGATOR
10006103	1	WASHER PLATE 5/8
10009603	1	BOLT HEX 3/8 NC GR.2 01.00"
10012903	1	PUMP HYPRO C9016 540 RPM 90023
10013403	1	BOLT HEX 3/8-16X1 1/4 HCS Z5
10013503	1	NUT HEX NC 3/8"
10019703	1	NUT HEX NC FHN 3/4-10 Z 5
10043603	1	BOLT HEX 7/16 NC GR.5 01.25"
10061903	1	JACK F300/500/575 5000LB
10062103	1	STRAP F. NAV M TNK 1000 110"LG
10151403	1	BOLT HEX 3/8 NC GR.2 02.50"
10188303	1	TIRE 13.6" X 38"
10212903	1	NUT HEX NC (NYLON LOCK) 3/8"
10213003	1	NUT HEX NC (NYLON LOCK) 7/16"
10248803	1	BOLT HEX 7/16 NC GR.2 02.00"
10258203	1	BOLT HEX 5/8 NC GR.2 02.00"
10507303	1	CLEVIS NAV.550/800/1000 GAL.
10508303	1	HANDRAIL NAV 800/1000 GAL.
10509003	1	SIDE BRACE NAV8/1000 45-66'EAG
10509503	1	SIDE BRACE NAV8/1000 80-90'EAG
10509803	1	STRAP F.NAV TANK 800 GAL.
10509903	1	FLATBAR F.FILTER
10510003	1	STRAP F.TANK REINFOR.1000 NAV
10510603	1	BOLT F.ANCHOR STRAP
10511003	1	FRONT STEP ASSY.550/800/1000
10512003	1	SIDE STEP ASSY.550/800/1000
10512203	1	FLATBAR SIDE STRAP F.NAV8/1000
10512403	1	BOLT HEX 3/4 NC GR.8 02.25"
10516503	1	INSERT W/M NAV HC W/SPINDLE
10517103	1	AXLE ASSY NAV M 1000 HC 120"
10517403	1	AXLE W/M NAV.HC 120"W/SPINDLES
10518303	1	BOLT HEX 2&3/4 NC GR.8 3.00"
10519403	1	STRAP F.TANK REINFOR.800 NAV
10521503	1	NAV TANK STOP BKT.KIT
10544503	1	TIRE ASSY 13.6 X 38 LH 8BLT HD
10544603	1	TIRE ASSY 13.6 X 38 RH 8BLT HD
10622703	1	AXLE ASSY NAV M 1000 HC 72-88"
10623603	1	CABLE & HOSE HOLDER NAV.
10631803	1	FLATBAR 1/4" x 110MM F.JACK
10631903	1	JACK MOUNT NAV550/1000 W/MOUNT
28045203	1	RIM 38X12 8/8/6 1.06-OS GRAY
28050103	1	HUB F 3" 758 7500# PACKAGE
46001003	1	NUT HEX 5/8"-11 NYLOCK

WWW.PO-TRONIK.PL

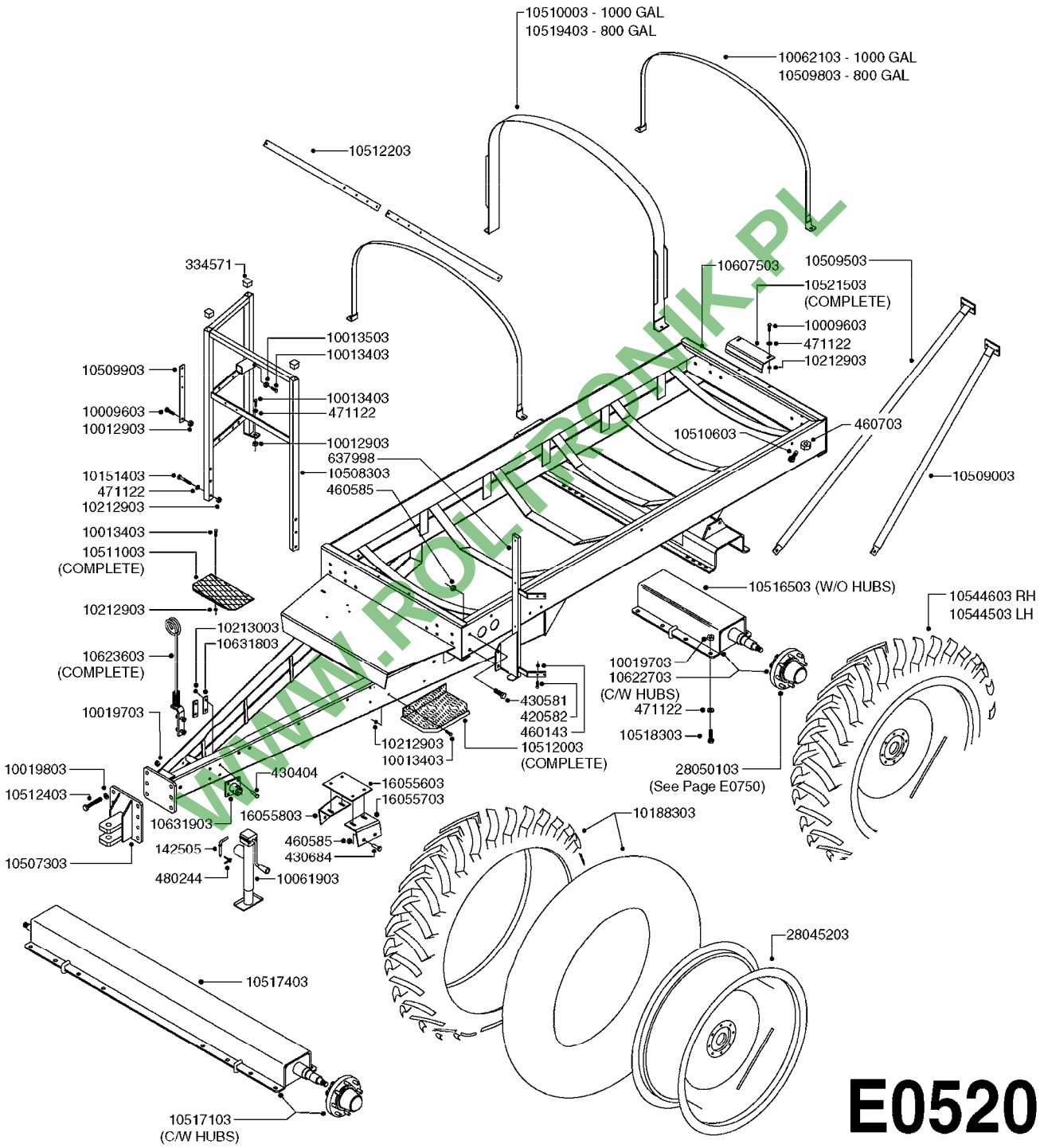

WWW.ROLTRONIK.PL

parts-nº	order qty	description
142505	1	LOCKING PAWL 12 X 70MM
334571	1	TAPON 40x40x2 EMBELLECEDOR
420582	1	BOLT HEX 8.8 DEL M8X20 FT A2
430404	1	BOLT HEX 8.8 DEL M12X50
430581	1	BOLT HEX 8.8 DEL M16X40 FT
430684	1	BOLT HEX 8.8 DEL M16X30 FT
460143	1	NUT HEX M8 LOCK A2 DIN985
460585	1	NUT HEX M16X2 LOCK
460703	1	NUT HEX M12X1.75 LOCK DIN985
471122	1	WASHER, M10, Ø20/10.5X 2.0, SS
480244	1	PIN SNAP D4.5
637998	1	MANIFOLD BKT. NAVIGATOR
10009603	1	BOLT HEX 3/8 NC GR.2 01.00"
10012903	1	PUMP HYPRO C9016 540 RPM 90023
10013403	1	BOLT HEX 3/8-16X1 1/4 HCS Z5
10013503	1	NUT HEX NC 3/8"
10019703	1	NUT HEX NC FHN 3/4-10 Z 5
10019803	1	WASHER LOCK L/W Z 3/4"
10061903	1	JACK F300/500/575 5000LB
10062103	1	STRAP F. NAV M TNK 1000 110"LG
10151403	1	BOLT HEX 3/8 NC GR.2 02.50"
10188303	1	TIRE 13.6" X 38"
10212903	1	NUT HEX NC (NYLON LOCK) 3/8"
10213003	1	NUT HEX NC (NYLON LOCK) 7/16"
10507303	1	CLEVIS NAV.550/800/1000 GAL.
10508303	1	HANDRAIL NAV 800/1000 GAL.
10509003	1	SIDE BRACE NAV8/1000 45-66'EAG
10509503	1	SIDE BRACE NAV8/1000 80-90'EAG
10509803	1	STRAP F.NAV TANK 800 GAL.
10509903	1	FLATBAR F.FILTER
10510003	1	STRAP F.TANK REINFOR.1000 NAV
10510603	1	BOLT F.ANCHOR STRAP
10511003	1	FRONT STEP ASSY.550/800/1000
10512003	1	SIDE STEP ASSY.550/800/1000
10512203	1	FLATBAR SIDE STRAP F.NAV8/1000
10512403	1	BOLT HEX 3/4 NC GR.8 02.25"
10516503	1	INSERT W/M NAV HC W/SPINDLE
10517103	1	AXLE ASSY NAV M 1000 HC 120"
10517403	1	AXLE W/M NAV.HC 120"W/SPINDLES
10518303	1	BOLT HEX 2&3/4 NC GR.8 3.00"
10519403	1	STRAP F.TANK REINFOR.800 NAV
10521503	1	NAV TANK STOP BKT.KIT
10544503	1	TIRE ASSY 13.6 X 38 LH 8BLT HD
10544603	1	TIRE ASSY 13.6 X 38 RH 8BLT HD
10607503	1	FRAME NAVIGATOR 800/1000-98
10622703	1	AXLE ASSY NAV M 1000 HC 72-88"
10623603	1	CABLE & HOSE HOLDER NAV.
10631803	1	FLATBAR 1/4" x 110MM F.JACK
10631903	1	JACK MOUNT NAV550/1000 W/MOUNT
16055603	1	PUMP MT. PLATE DIA. NAV. M
16055703	1	PUMP MT. PLATE L.H. DIA. NAV.M
16055803	1	PUMP MT. PLATE R.H. DIA. NAV.M
28045203	1	RIM 38X12 8/8/6 1.06-OS GRAY
28050103	1	HUB F 3" 758 7500# PACKAGE

WWW.FOTRONIK.PL

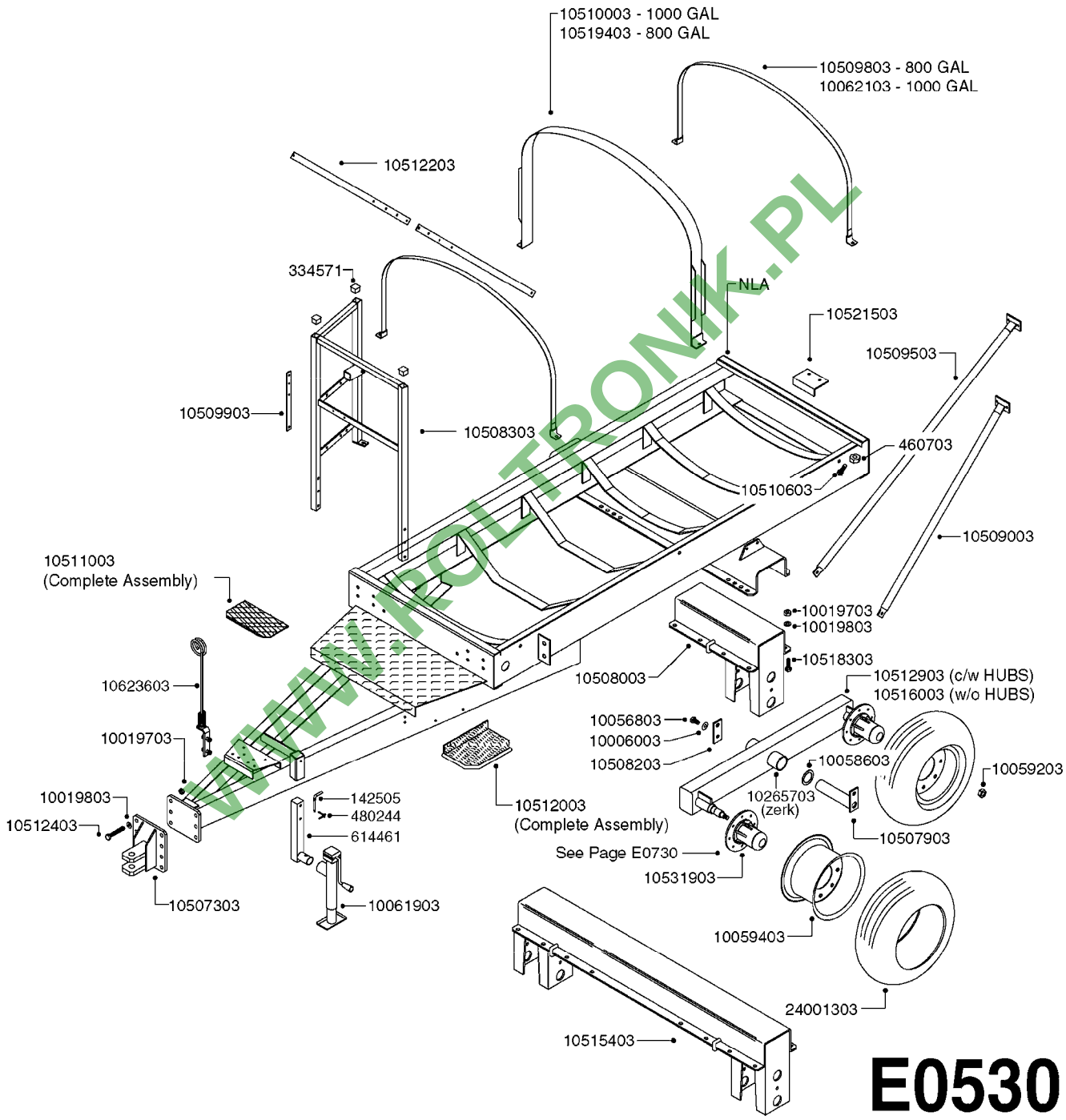

WWW.ROLTRONIK.PL

E0530

parts-n°	order qty	description
142505	1	LOCKING PAWL 12 X 70MM
334571	1	TAPON 40x40x2 EMBELLECEDOR
460703	1	NUT HEX M12X1.75 LOCK DIN985
480244	1	PIN SNAP D4.5
614461	1	JACK STAND ATTACHMENT
10006003	1	WASHER LOCK 5/8"
10019703	1	NUT HEX NC FHN 3/4-10 Z 5
10019803	1	WASHER LOCK L/W Z 3/4"
10056803	1	BOLT HEX 5/8 NC GR.5 01.50"
10058603	1	GARLOCK 2.5"DU 2.5" TA800/1000
10059203	1	BOLT WHEEL 9/16"x1-1/4"UNF 90D
10059403	1	RIM 15X10 X 8-8-6 +1.062OFFSET
10061903	1	JACK F300/500/575 5000LB
10062103	1	STRAP F. NAV M TNK 1000 110"LG
10265703	1	GREASE ZERK 5MM PRESS FIT
10507303	1	CLEVIS NAV.550/800/1000 GAL.
10507903	1	PIN F.PIVOT NAV800/1000
10508003	1	UPRIGHT W/M 800/1000 TANDEM
10508203	1	FLATBAR TANDEM NAV800/1000
10508303	1	HANDRAIL NAV 800/1000 GAL.
10509003	1	SIDE BRACE NAV8/1000 45-66'EAG
10509503	1	SIDE BRACE NAV8/1000 80-90'EAG
10509803	1	STRAP F.NAV TANK 800 GAL.
10509903	1	FLATBAR F.FILTER
10510003	1	STRAP F.TANK REINFOR.1000 NAV
10510603	1	BOLT F.ANCHOR STRAP
10511003	1	FRONT STEP ASSY.550/800/1000
10512003	1	SIDE STEP ASSY.550/800/1000
10512203	1	FLATBAR SIDE STRAP F.NAV8/1000
10512403	1	BOLT HEX 3/4 NC GR.8 02.25"
10512903	1	TANDEM BEAM ASSY.800/1000
10515403	1	AXLE W/M NAV.TA 800/1000 120"
10516003	1	TANDEM BEAM W/M NAV W/SPINDLE
10518303	1	BOLT HEX 2&3/4 NC GR.8 3.00"
10519403	1	STRAP F.TANK REINFOR.800 NAV
10521503	1	NAV TANK STOP BKT.KIT
10531903	1	HUB ASSY.COMP.F.2-1/8" SPINDLE
10623603	1	CABLE & HOSE HOLDER NAV.
24001303	1	TIRE 12.5L-15SL 12 PLY

WWW.PRO-TRONIK.PL

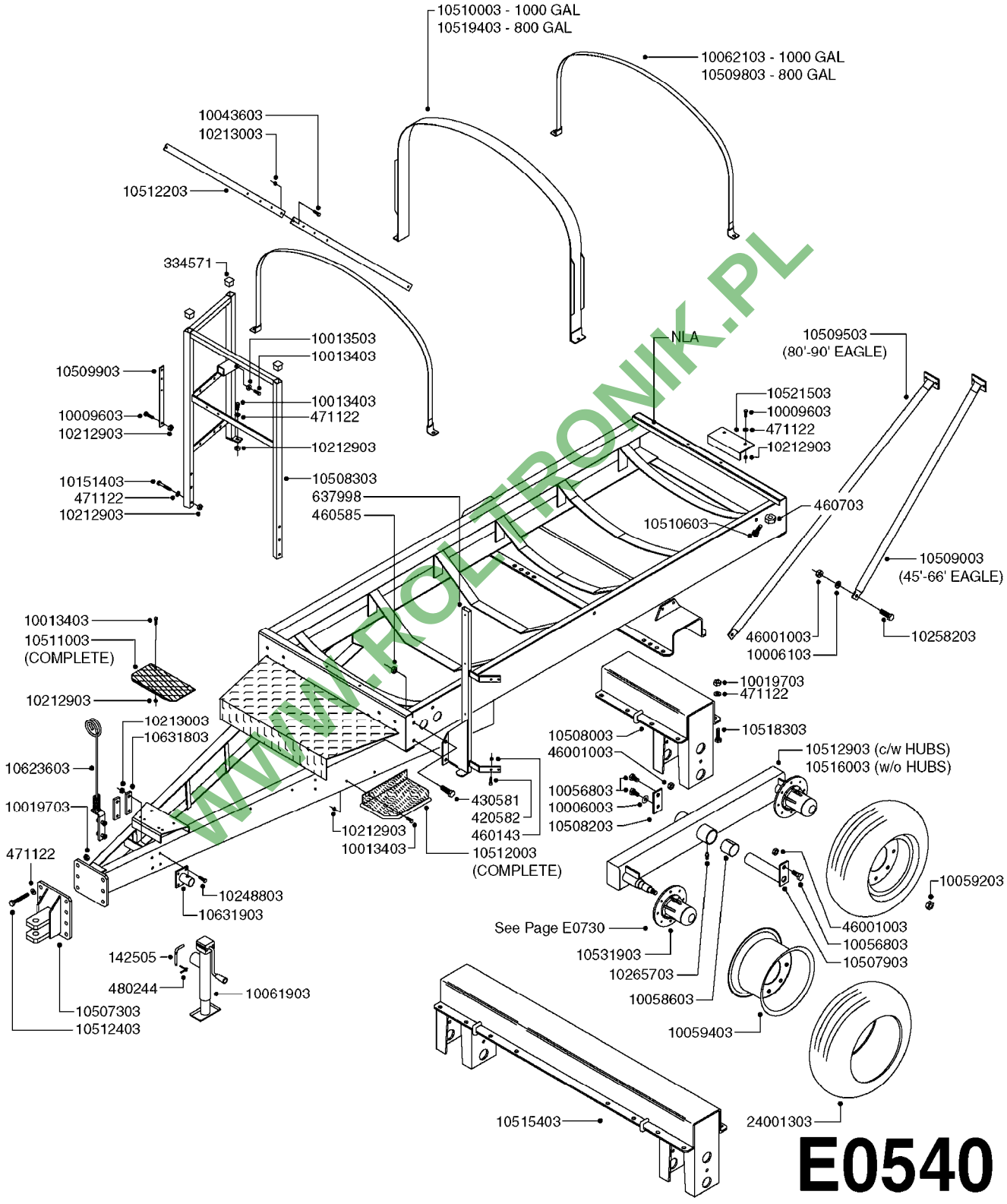

WWW.ROLTRONIK.PL

E0540

parts-nº	order qty	description
142505	1	LOCKING PAWL 12 X 70MM
334571	1	TAPON 40x40x2 EMBELLECEDOR
420582	1	BOLT HEX 8.8 DEL M8X20 FT A2
430581	1	BOLT HEX 8.8 DEL M16X40 FT
460143	1	NUT HEX M8 LOCK A2 DIN985
460585	1	NUT HEX M16X2 LOCK
460703	1	NUT HEX M12X1.75 LOCK DIN985
471122	1	WASHER, M10, Ø20/10.5X 2.0, SS
480244	1	PIN SNAP D4.5
637998	1	MANIFOLD BKT. NAVIGATOR
10006003	1	WASHER LOCK 5/8"
10006103	1	WASHER PLATE 5/8
10009603	1	BOLT HEX 3/8 NC GR.2 01.00"
10012903	1	PUMP HYPRO C9016 540 RPM 90023
10013403	1	BOLT HEX 3/8-16X1 1/4 HCS Z5
10013503	1	NUT HEX NC 3/8"
10019703	1	NUT HEX NC FHN 3/4-10 Z 5
10043603	1	BOLT HEX 7/16 NC GR.5 01.25"
10056803	1	BOLT HEX 5/8 NC GR.5 01.50"
10058603	1	GARLOCK 2.5"DU 2.5" TA800/1000
10059203	1	BOLT WHEEL 9/16"x1-1/4"UNF 90D
10059403	1	RIM 15X10 X 8-8-6 +1.062OFFSET
10061903	1	JACK F300/500/575 5000LB
10062103	1	STRAP F. NAV M TNK 1000 110"LG
10151403	1	BOLT HEX 3/8 NC GR.2 02.50"
10212903	1	NUT HEX NC (NYLON LOCK) 3/8"
10213003	1	NUT HEX NC (NYLON LOCK) 7/16"
10248803	1	BOLT HEX 7/16 NC GR.2 02.00"
10258203	1	BOLT HEX 5/8 NC GR.2 02.00"
10265703	1	GREASE ZERK 5MM PRESS FIT
10507303	1	CLEVIS NAV.550/800/1000 GAL.
10507903	1	PIN F.PIVOT NAV800/1000
10508003	1	UPRIGHT W/M 800/1000 TANDEM
10508203	1	FLATBAR TANDEM NAV800/1000
10508303	1	HANDRAIL NAV 800/1000 GAL.
10509003	1	SIDE BRACE NAV8/1000 45-66'EAG
10509503	1	SIDE BRACE NAV8/1000 80-90'EAG
10509803	1	STRAP F.NAV TANK 800 GAL.
10509903	1	FLATBAR F.FILTER
10510003	1	STRAP F.TANK REINFOR.1000 NAV
10510603	1	BOLT F.ANCHOR STRAP
10511003	1	FRONT STEP ASSY.550/800/1000
10512003	1	SIDE STEP ASSY.550/800/1000
10512203	1	FLATBAR SIDE STRAP F.NAV8/1000
10512403	1	BOLT HEX 3/4 NC GR.8 02.25"
10512903	1	TANDEM BEAM ASSY.800/1000
10515403	1	AXLE W/M NAV.TA 800/1000 120"
10516003	1	TANDEM BEAM W/M NAV W/SPINDLE
10518303	1	BOLT HEX 2&3/4 NC GR.8 3.00"
10519403	1	STRAP F.TANK REINFOR.800 NAV
10521503	1	NAV TANK STOP BKT.KIT
10531903	1	HUB ASSY.COMP.F.2-1/8" SPINDLE
10623603	1	CABLE & HOSE HOLDER NAV.
10631803	1	FLATBAR 1/4" x 110MM F.JACK
10631903	1	JACK MOUNT NAV550/1000 W/MOUNT
24001303	1	TIRE 12.5L-15SL 12 PLY
46001003	1	NUT HEX 5/8"-11 NYLOCK

WWW.PO-TRONIK.PL

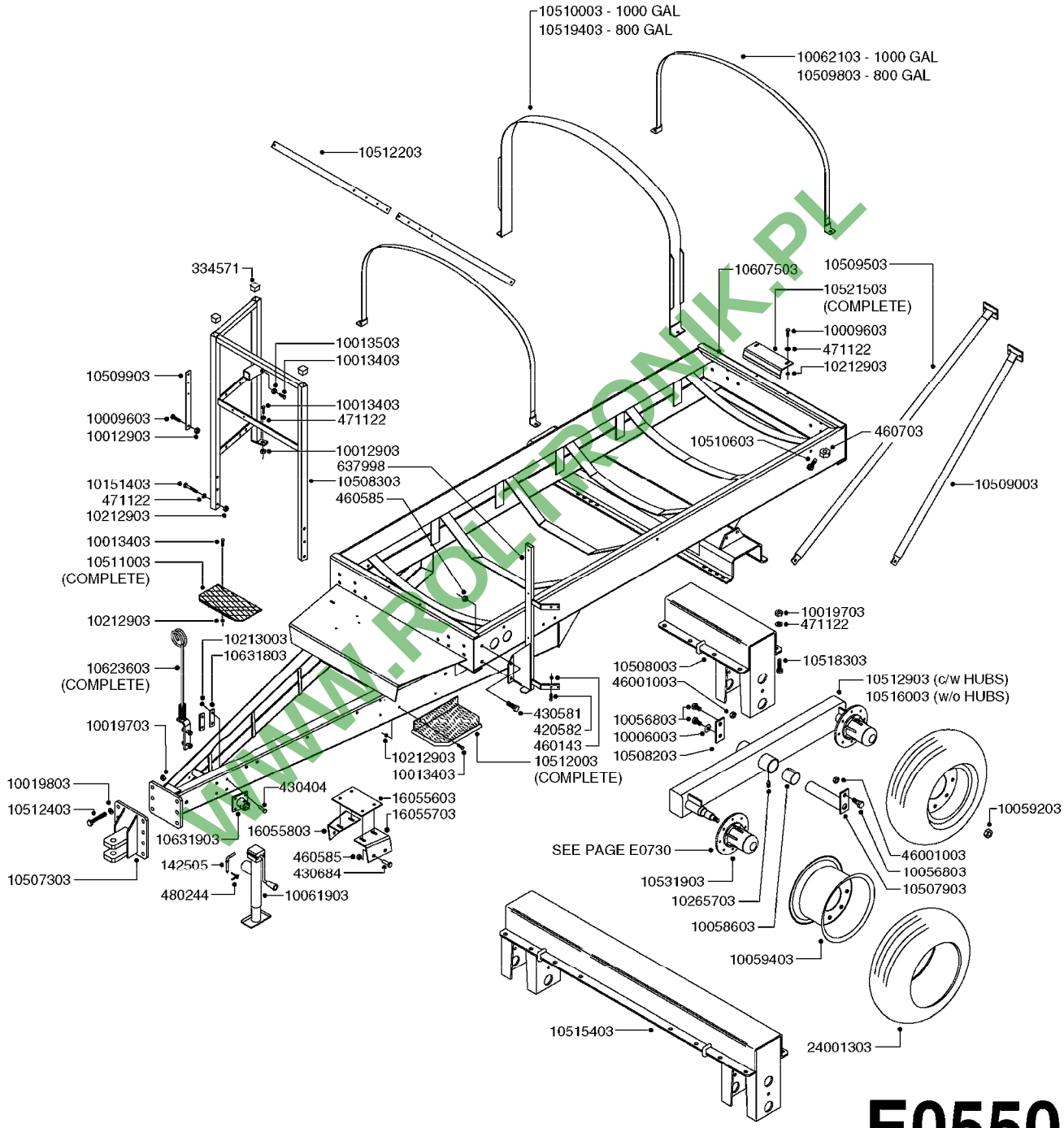

WWW.ROLTRONIK.PL

E0550

parts-nº	order qty	description
142505	1	LOCKING PAWL 12 X 70MM
334571	1	TAPON 40x40x2 EMBELLECEDOR
420582	1	BOLT HEX 8.8 DEL M8X20 FT A2
430404	1	BOLT HEX 8.8 DEL M12X50
430581	1	BOLT HEX 8.8 DEL M16X40 FT
430684	1	BOLT HEX 8.8 DEL M16X30 FT
460143	1	NUT HEX M8 LOCK A2 DIN985
460585	1	NUT HEX M16X2 LOCK
460703	1	NUT HEX M12X1.75 LOCK DIN985
471122	1	WASHER, M10, Ø20/10.5X 2.0, SS
480244	1	PIN SNAP D4.5
637998	1	MANIFOLD BKT. NAVIGATOR
10006003	1	WASHER LOCK 5/8"
10009603	1	BOLT HEX 3/8 NC GR.2 01.00"
10012903	1	PUMP HYPRO C9016 540 RPM 90023
10013403	1	BOLT HEX 3/8-16X1 1/4 HCS Z5
10013503	1	NUT HEX NC 3/8"
10019703	1	NUT HEX NC FHN 3/4-10 Z 5
10019803	1	WASHER LOCK L/W Z 3/4"
10056803	1	BOLT HEX 5/8 NC GR.5 01.50"
10058603	1	GARLOCK 2.5"DU 2.5" TA800/1000
10059203	1	BOLT WHEEL 9/16"x1-1/4"UNF 90D
10059403	1	RIM 15X10 X 8-8-6 +1.062OFFSET
10061903	1	JACK F300/500/575 5000LB
10062103	1	STRAP F. NAV M TNK 1000 110"LG
10151403	1	BOLT HEX 3/8 NC GR.2 02.50"
10212903	1	NUT HEX NC (NYLON LOCK) 3/8"
10213003	1	NUT HEX NC (NYLON LOCK) 7/16"
10265703	1	GREASE ZERK 5MM PRESS FIT
10507303	1	CLEVIS NAV.550/800/1000 GAL.
10507903	1	PIN F.PIVOT NAV800/1000
10508003	1	UPRIGHT W/M 800/1000 TANDEM
10508203	1	FLATBAR TANDEM NAV800/1000
10508303	1	HANDRAIL NAV 800/1000 GAL.
10509003	1	SIDE BRACE NAV8/1000 45-66'EAG
10509503	1	SIDE BRACE NAV8/1000 80-90'EAG
10509803	1	STRAP F.NAV TANK 800 GAL.
10509903	1	FLATBAR F.FILTER
10510003	1	STRAP F.TANK REINFOR.1000 NAV
10510603	1	BOLT F.ANCHOR STRAP
10511003	1	FRONT STEP ASSY.550/800/1000
10512003	1	SIDE STEP ASSY.550/800/1000
10512203	1	FLATBAR SIDE STRAP F.NAV8/1000
10512403	1	BOLT HEX 3/4 NC GR.8 02.25"
10512903	1	TANDEM BEAM ASSY.800/1000
10515403	1	AXLE W/M NAV.TA 800/1000 120"
10516003	1	TANDEM BEAM W/M NAV W/SPINDLE
10518303	1	BOLT HEX 2&3/4 NC GR.8 3.00"
10519403	1	STRAP F.TANK REINFOR.800 NAV
10521503	1	NAV TANK STOP BKT.KIT
10531903	1	HUB ASSY.COMP.F.2-1/8" SPINDLE
10607503	1	FRAME NAVIGATOR 800/1000-98
10623603	1	CABLE & HOSE HOLDER NAV.
10631803	1	FLATBAR 1/4" x 110MM F.JACK
10631903	1	JACK MOUNT NAV550/1000 W/MOUNT
16055603	1	PUMP MT. PLATE DIA. NAV. M
16055703	1	PUMP MT. PLATE L.H. DIA. NAV.M
16055803	1	PUMP MT. PLATE R.H. DIA. NAV.M
24001303	1	TIRE 12.5L-15SL 12 PLY
46001003	1	NUT HEX 5/8"-11 NYLOCK

WWW.TO-TRONIK.PL

HARDI	**Agroparts: www.HARDI-INTERNATIONAL.com**	
	HUB ASSEMBLY F.2 1/8" SPINDLE E0730-HIN, 01:01:16	Page 0 Date 16.03.2016 13:35

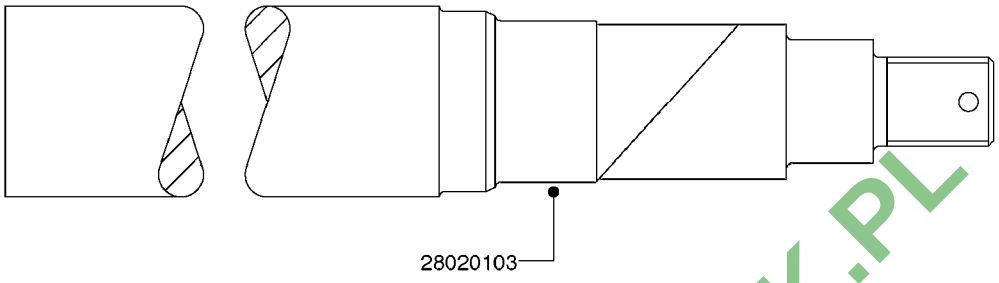

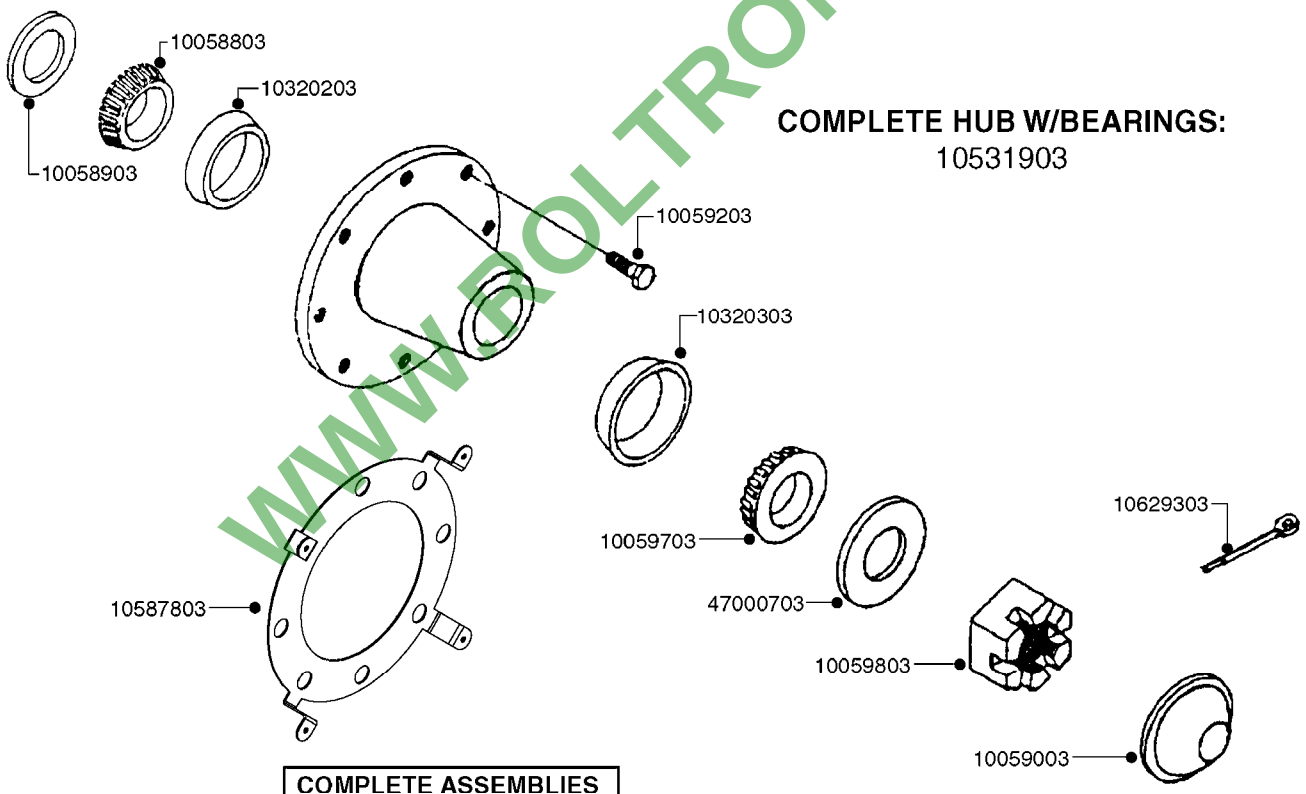

COMPLETE HUB W/BEARINGS:
10531903

COMPLETE ASSEMBLIES WHOLEGOODS ITEMS

E0730

WWW.ROLTRONIK.PL

HUB ASSEMBLY F.2 1/8" SPINDLE
E0730-HIN, 01:01:16

Date 16.03.2016 13:35

parts-n°	order qty	description
10058803	1	BEARING INNER CONE Æ25590
10058903	1	SEAL HUB ÆSE41
10059003	1	DUST CAP 800/1000 GAL ÆDC17
10059203	1	BOLT WHEEL 9/16"x1-1/4"UNF 90D
10059703	1	BEARING OUTER CONE Æ25877
10059803	1	NUT HEX NF 1"
10320203	1	BEARING INNER CUP1000GAL.TR/TA
10320303	1	BEARING OUTER CUP1000GAL.TR/TA
10531903	1	HUB ASSY.COMP.F.2-1/8" SPINDLE
10587803	1	MAG MNT F. SPEED SNS 8 BOLT
10629303	1	PIN, COTTER 7/32" X 1.75" LONG
28020103	1	SPINDLE 2.125 CRS 14" 811
47000703	1	WASHER, SPNDL 1.1" 1.06x2 .19T

WWW.ROLTRONIK.PL

HARDI	**Agroparts: www.HARDI-INTERNATIONAL.com**	
	HUB ASSY F. 3" SPINDLE CM750 E0750-HIN, 01:01:16	Page 0 Date 16.03.2016 13:35

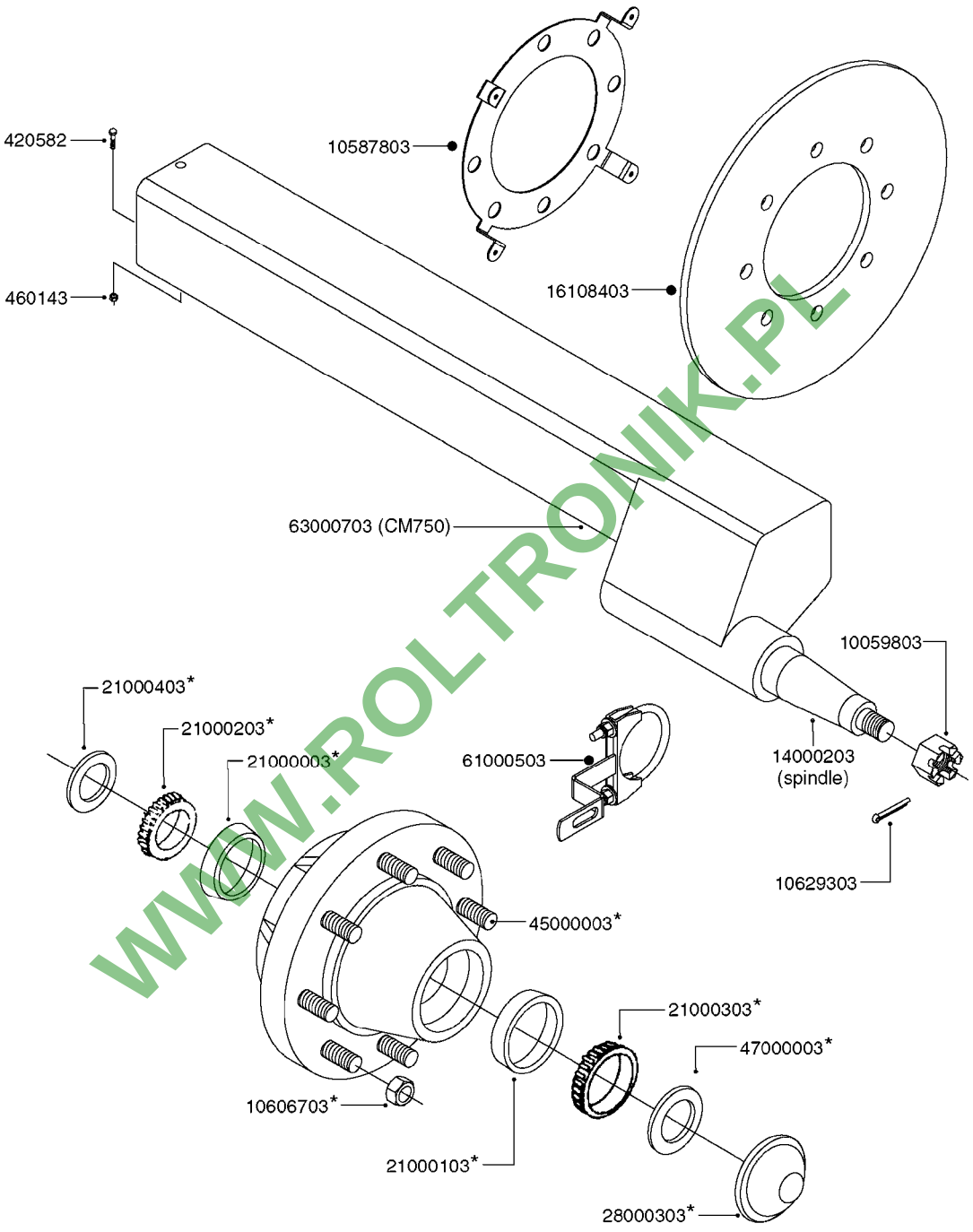

WWW.ROLTRONIK.PL

*28050103 - COMPLETE HUB ASSEMBLY

COMPLETE ASSEMBLIES
WHOLEGOODS ITEMS

E0750

HUB ASSY F. 3" SPINDLE CM750
E0750-HIN, 01:01:16

Date 16.03.2016 13:35

parts-n°	order qty	description
420582	1	BOLT HEX 8.8 DEL M8X20 FT A2
460143	1	NUT HEX M8 LOCK A2 DIN985
10059803	1	NUT HEX NF 1"
10587803	1	MAG MNT F. SPEED SNS 8 BOLT
10606703	1	NUT HEX NF 5/8" FLANGED F.STUD
10629303	1	PIN, COTTER 7/32" X 1.75" LONG
14000203	1	SPINDLE 3" X 16" W/NUT &WASHER
16108403	1	REINFORCEMENT RING 8-8-6 HUB FOR NON-REINFORCED 3/8" RIMS ONLY
21000003	1	BEARING INNER CUP #382A
21000103	1	BEARING OUTER CUP #LM501310
21000203	1	BEARING INNER CONE #387AS
21000303	1	BEARING OUTER CONE #LM501349
21000403	1	SEAL GREASE #CR29968
28000303	1	DUST CAP #1609
28050103	1	HUB F 3" 758 7500# PACKAGE
45000003	1	STUD BOLT 5/8" X 2-1/2"
47000003	1	WASHER SPNDL 3" 1.12X2.1 .25TK
61000503	1	SPEED SNS MNT CLAMP - 3"
63000703	1	AXLE INSERT W/M CM750

WWW.ROLTRONIK.PL

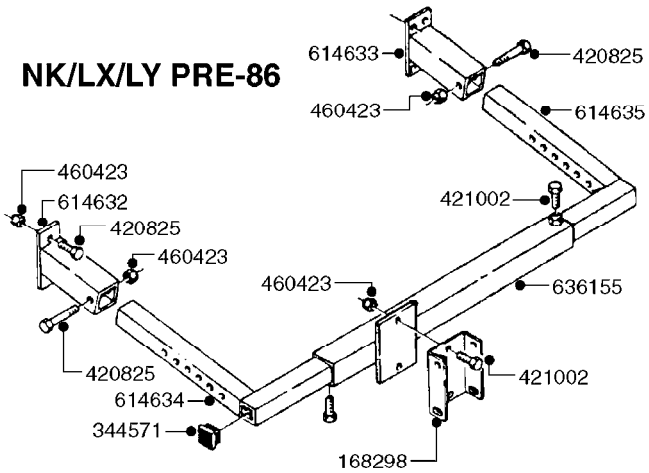

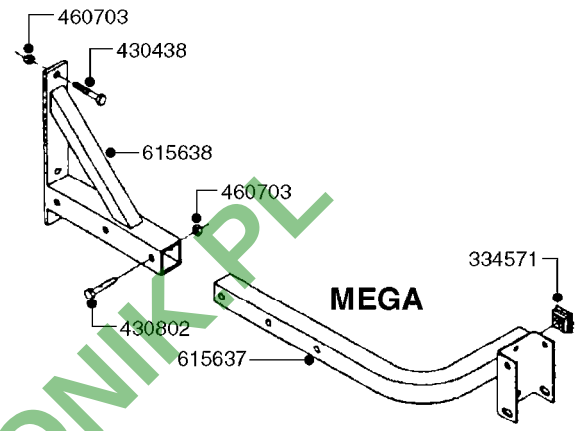

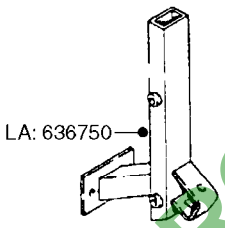

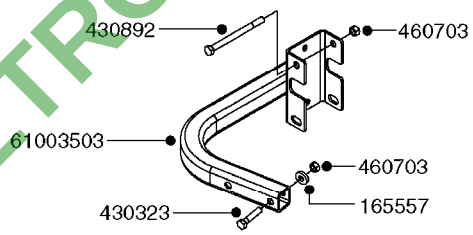

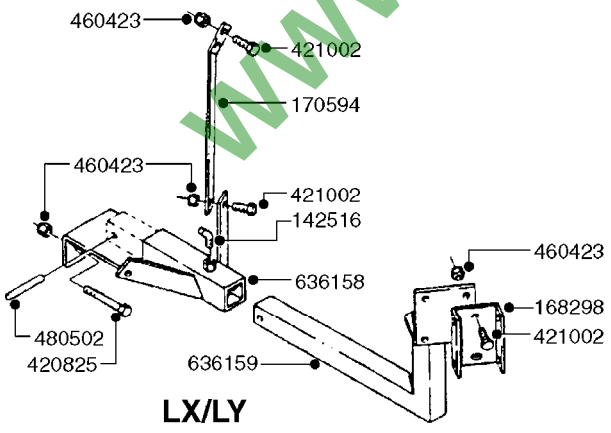

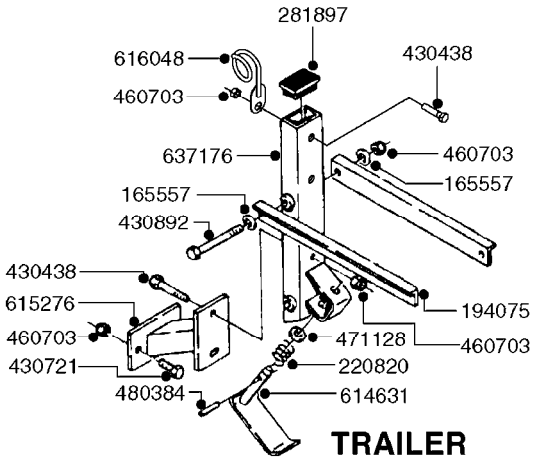

K0050

WWW.ROLTRONIK.PL

parts-nº	order qty	description
142516	1	SCREW SET M10 BENT F. LOCKING
165557	1	WASHER D28.0/D12.2X2.0 SS
168298	1	INTERM BRACKET
170594	1	170594
194075	1	MOUNT ARM F.CHEM.FILL BRACKET
220820	1	SPRING D20.5/2.0 0-50MM
281897	1	COVER PLUG
334571	1	TAPON 40x40x2 EMBELLECEDOR
420825	1	BOLT HEX 8.8 DEL M10X65
421002	1	BOLT HEX 8.8 DEL M10X30 FT DIN933
430323	1	BOLT HEX 8.8 DEL M12X60
430438	1	BOLT HEX 8.8 DEL M12X65
430721	1	BOLT HEX 8.8 DEL M12X40 FT
430802	1	BOLT HEX 8.8 DEL M12X75
430892	1	BOLT HEX 8.8 DEL M12X110
460423	1	NUT HEX M10X1.5 LOCK
460703	1	NUT HEX M12X1.75 LOCK DIN985
471128	1	WASHER, M16, Ø30/17.0X 3.0, SS
480384	1	PIN COTTER 3/16 x 1-1/2"
480502	1	PIN RETAINING M10X50 DIN 1481
614631	1	FOOT PEDAL FOR FILLER
614632	1	SOCKET FOR SUSPENSION LEFT
614633	1	SOCKET FOR SUSPENSION RIGHT
614634	1	MOUNT BRACKET F.ACCESS. RIGHT
614635	1	MOUNT BRACKET F. ACCESS. LEFT
615276	1	BRACKET F.CHEM.FILL MOUNT
615637	1	MNT. BRKT. MEGA CHEM. FILLER
615638	1	MOUNT BKT.F.CHEM FILLER MEGA
616048	1	HOSE HOLDER
636155	1	CENTER-PCS. F.SUSPENSION
636158	1	TELESCOPE HOLDER
636159	1	TELESCOPE PIPE F.HARDI FILLER
636750	1	636750
637176	1	CONSOLE F. CHEMFILL BRACKET

WWW.FOTRONIK.PL

HARDI	**Agroparts: www.HARDI-INTERNATIONAL.com**	
	CHEM.FILLER-PLUMBING-MANIFOLD K0060-HIN, 01:01:16	Page 0 Date 16.03.2016 13:35

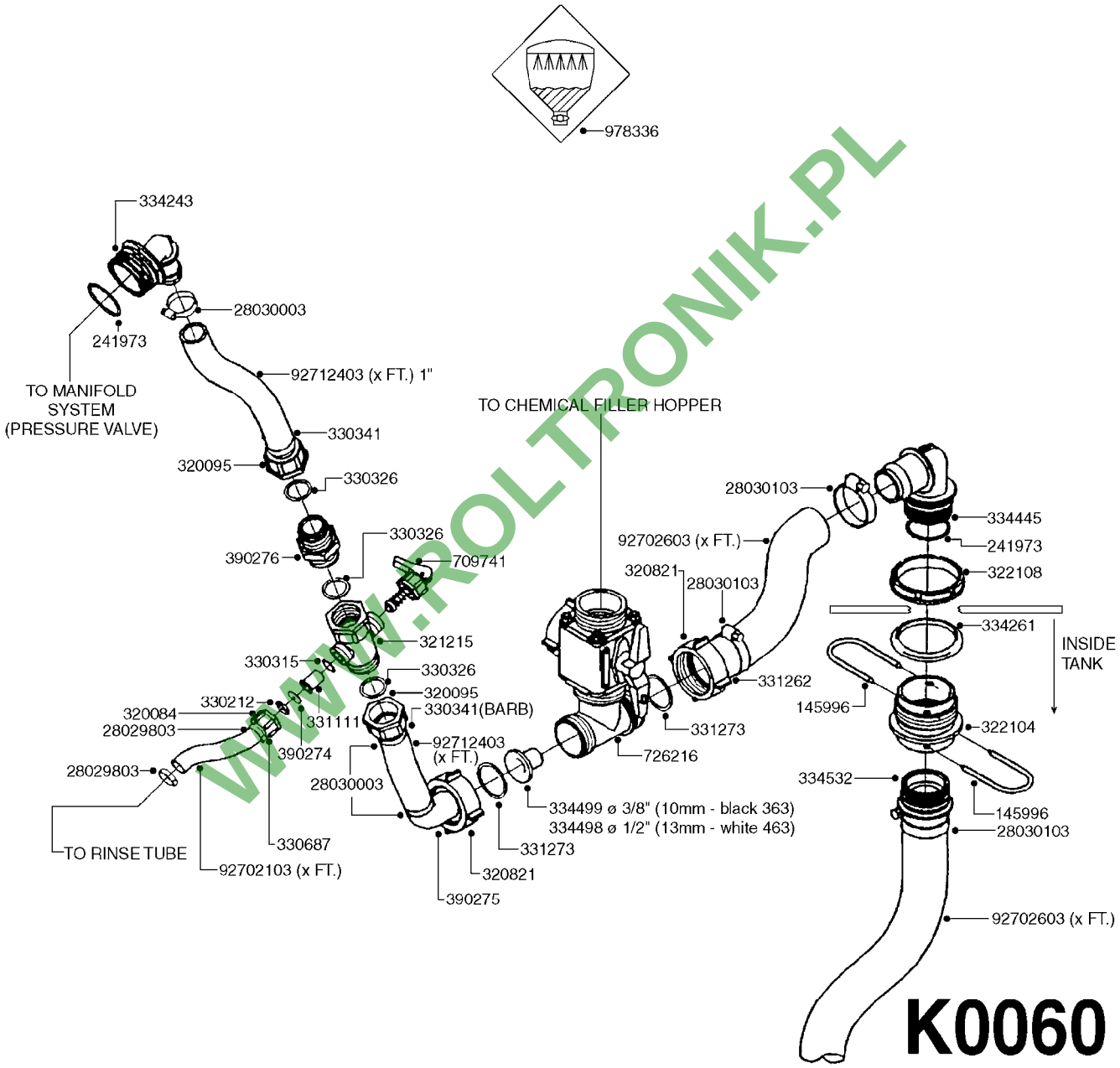

WWW.ROLTRONIK.PL

parts-nº	order qty	description
145996	1	FITT.DK S-67 FORK
241973	1	O-RING 44.2 x 3.0 (use-242353)
320084	1	FITT.DK NUT 1/2" BSP
320095	1	FITT.DK NUT 1" BSP
320821	1	FITT.DK NUT 1-1/2" BSP
321215	1	FITT.DK HOUSING F. AGITATION
322104	1	FITT.DK S-67 BULKHEAD
322108	1	FITT.DK S-67 BULKHEAD NUT
330212	1	O-RING D19/D14X2.4 F.1/2"NUT
330315	1	O-RING D18.4/D13X.6
330326	1	O-RING D30/D24X2 F.1"NUT
330341	1	FITT.DK HB 1" F. 1" NUT
330687	1	FITT.DK HB 1/2" F. 1/2" NUT
331111	1	VALVE SEAT FOR 1/2" DISTRIBUT.
331262	1	FITT.DK HB 1-1/2" F. 1-1/2"NUT
331273	1	O-RING D44/D38X2 F.1-1/2"
334243	1	FITT.DK S-67 ELB.1"
334261	1	GASKET F. S-67 BULKHEAD
334445	1	FITT.DK S-67 ELB.1-1/2"
334498	1	NOZZLE INJECTOR 13MM/462 WHITE
334499	1	NOZZLE INJECTOR 10MM/361 BLACK
334532	1	FITT.DK S-67 STR.1-1/2' W/HOLE
390274	1	ORIFICE ID4.0/18/1.5
390275	1	FITT.DK ELB 1' SPECIAL F.CHEMF
390276	1	FITT.DK HN 1'BSP
709741	1	VALVE ASSY. 1/2" FLIP LEVER
726216	1	VALVE TWO WAY
978336	1	DECAL MANIFOLD SYS.CHEM.FILL
28029803	1	CLAMP HOSE GEAR P1/2" 6708
28030003	1	CLAMP HOSE GEAR P1" 6716
28030103	1	CLAMP HOSE GEAR P5/4-S1.5"6724
92702103	1	HOSE R X1/2" X300PSI WP X0012"
92702603	1	HOSE PVC SUCT GRAY 1-1/2"
92712403	1	HOSE R X1" X300PSI WP X0012"

WWW.POLTRONIK.PL

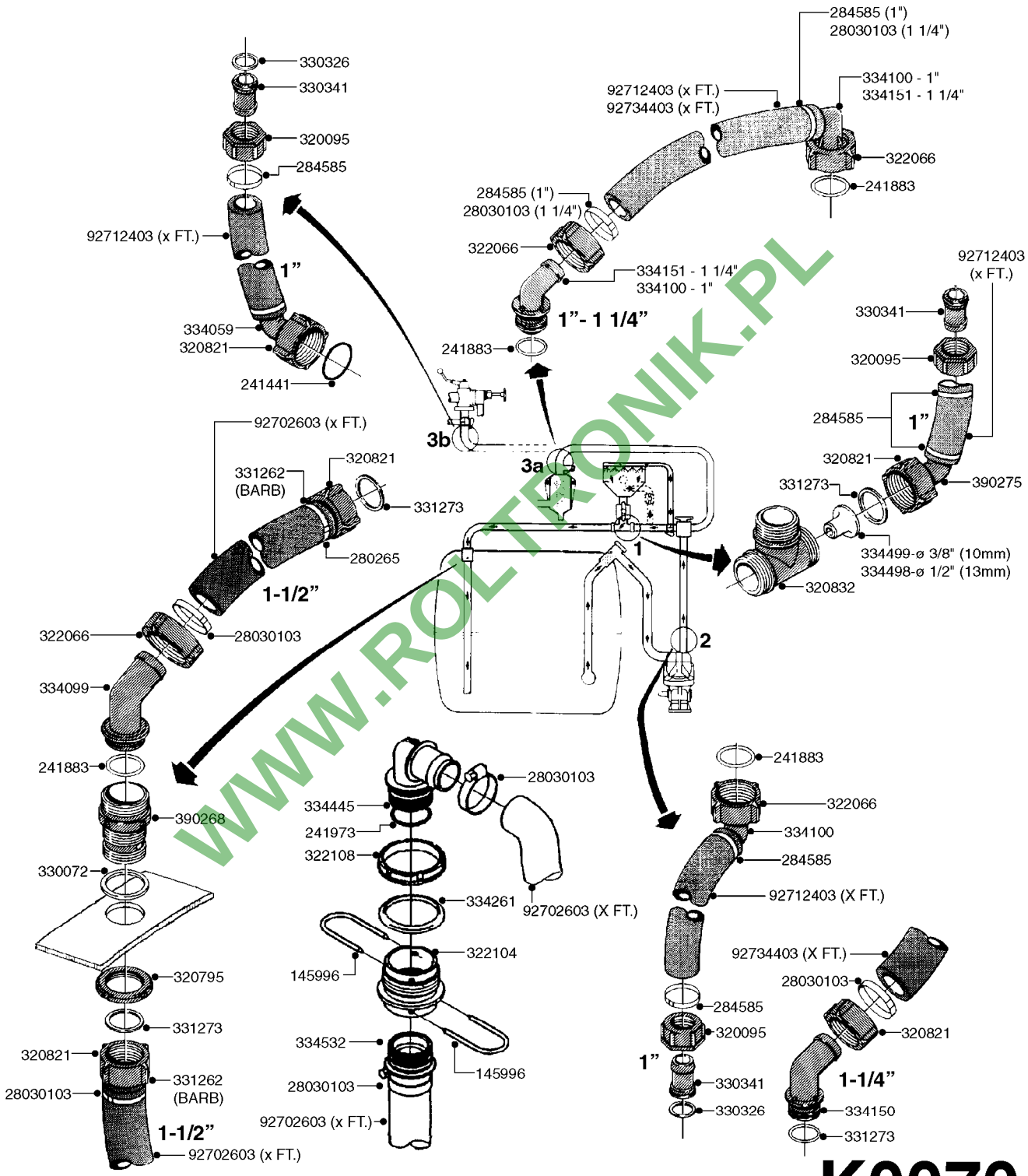

WWW.ROLTRONIK.PL

K0070

parts-nº	order qty	description
145996	1	FITT.DK S-67 FORK
241441	1	O-RING D29.3X3
241883	1	O-RING D39.2X3 NITRIL 242020
241973	1	O-RING 44.2 x 3.0 (use-242353)
280265	1	CLMP HS GEAR1-1/2" alt28030103
284585	1	CLAMP HOSE GEAR 1" MINI 020
320095	1	FITT.DK NUT 1" BSP
320795	1	FITT.DK NUT 1-1/2" BSP JAMB
320821	1	FITT.DK NUT 1-1/2" BSP
320832	1	FITT.DK TEE 1-1/2x1-1/2x1-1/2
322066	1	FITT.DK S-56 NUT
322104	1	FITT.DK S-67 BULKHEAD
322108	1	FITT.DK S-67 BULKHEAD NUT
330072	1	O-RING D53.5/D45.5X4
330326	1	O-RING D30/D24X2 F.1"NUT
330341	1	FITT.DK HB 1" F. 1" NUT
331262	1	FITT.DK HB 1-1/2" F. 1-1/2"NUT
331273	1	O-RING D44/D38X2 F.1-1/2"
334059	1	FITT.DK EL 1" 110 DEG.F.1-1/2"
334099	1	FITT.DK S-61 ELB.1-1/2"110 DEG
334100	1	FITT.DK S-61 ELB.1" 110 DEG.
334150	1	FITT.DK HB 1-1/4" 110 F.1-1/2"
334151	1	FITT.DK S-61 ELB.1-1/4"110 DEG
334261	1	GASKET F. S-67 BULKHEAD
334445	1	FITT.DK S-67 ELB.1-1/2"
334498	1	NOZZLE INJECTOR 13MM/462 WHITE
334499	1	NOZZLE INJECTOR 10MM/361 BLACK
334532	1	FITT.DK S-67 STR.1-1/2' W/HOLE
390268	1	FITT.DK BULKHEAD 1-1/2' SPEC.
390275	1	FITT.DK ELB 1' SPECIAL F.CHEMF
28030103	1	CLAMP HOSE GEAR P5/4-S1.5"6724
92702603	1	HOSE PVC SUCT GRAY 1-1/2"
92712403	1	HOSE R X1" X300PSI WP X0012"
92734403	1	HOSE R X5/4" X200PSI WP X0012"

WWW.POLTRONIK.PL

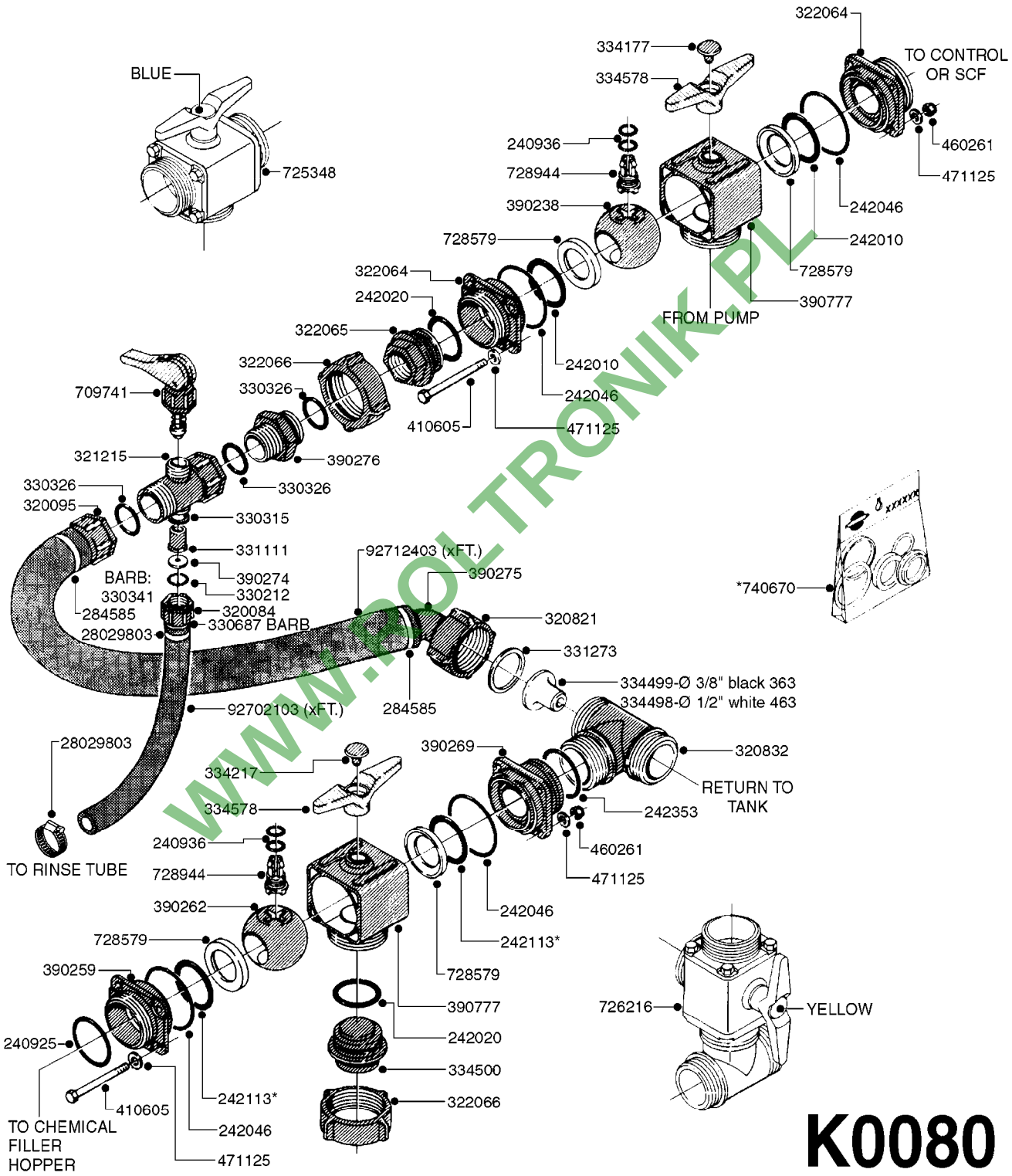

K0080

WWW.ROL-TRONIK.PL

parts-nº	order qty	description
240925	1	O-RING D49.5X3 NITRIL
240936	1	O-RING D13.3X2.4 NITRIL
242010	1	O-RING D37.47X5.33
242020	1	O-RING 39.2 X 3 VITON
242046	1	O-RING D60X2
242113	1	O-RING D37.5X5.3 VITON
242353	1	O-RING D44.2X3.0 VITON F.S-67
284585	1	CLAMP HOSE GEAR 1" MINI 020
320084	1	FITT.DK NUT 1/2" BSP
320095	1	FITT.DK NUT 1" BSP
320821	1	FITT.DK NUT 1-1/2" BSP
320832	1	FITT.DK TEE 1-1/2x1-1/2x1-1/2
321215	1	FITT.DK HOUSING F. AGITATION
322064	1	END COVER W.S56
322065	1	FITT.DK UNION 1' BSP/S-56
322066	1	FITT.DK S-56 NUT
330212	1	O-RING D19/D14X2.4 F.1/2"NUT
330315	1	O-RING D18.4/D13X.6
330326	1	O-RING D30/D24X2 F.1"NUT
330341	1	FITT.DK HB 1" F. 1" NUT
330687	1	FITT.DK HB 1/2" F. 1/2" NUT
331111	1	VALVE SEAT FOR 1/2" DISTRIBUT.
331273	1	O-RING D44/D38X2 F.1-1/2"
334177	1	VALVE INDICATOR BLUE
334217	1	VALVE INDICATOR YELLOW
334498	1	NOZZLE INJECTOR 13MM/462 WHITE
334499	1	NOZZLE INJECTOR 10MM/361 BLACK
334500	1	FITT.DK S-56 PLUG W/ 4.2Ø Hole
334578	1	HANDLE FOR VALVE 'OLD' STYLE
390238	1	BALL F. 3 WAY PRESSURE VALVE
390259	1	END COVER S56 F.3 WAY VALVE
390262	1	BALL F. 2 WAY VALVE
390269	1	END COVER S56 1-1/2"F.3WAY VLV
390274	1	ORIFICE ID4.0/18/1.5
390275	1	FITT.DK ELB 1' SPECIAL F.CHEMF
390276	1	FITT.DK HN 1'BSP
390777	1	HOUSING F.BALL VALVE 3 WAY
410605	1	BOLT HEX 8.8 DEL M6X80
460261	1	NUT HEX M6X1 LOCK A2 DIN985
471125	1	WASHER, M6, Ø12/ 6.4X 1.6, SS
709741	1	VALVE ASSY. 1/2" FLIP LEVER
725348	1	VALVE 3 WAY BLUE
726216	1	VALVE TWO WAY
728579	1	SEAL F BALL
728944	1	VALVE STEM & COLOURED CAPS
740670	1	SEAL KIT F. BALL VALVE VITON
28029803	1	CLAMP HOSE GEAR P1/2" 6708
92702103	1	HOSE R X1/2" X300PSI WP X0012"
92712403	1	HOSE R X1" X300PSI WP X0012"

WWW.PO-TRONIK.PL

HARDI	**Agroparts: www.HARDI-INTERNATIONAL.com**	
	CHEMICAL FILLER-HOPPER(PRE95) K0090-HIN, 01:01:16	Page 0 Date 16.03.2016 13:35

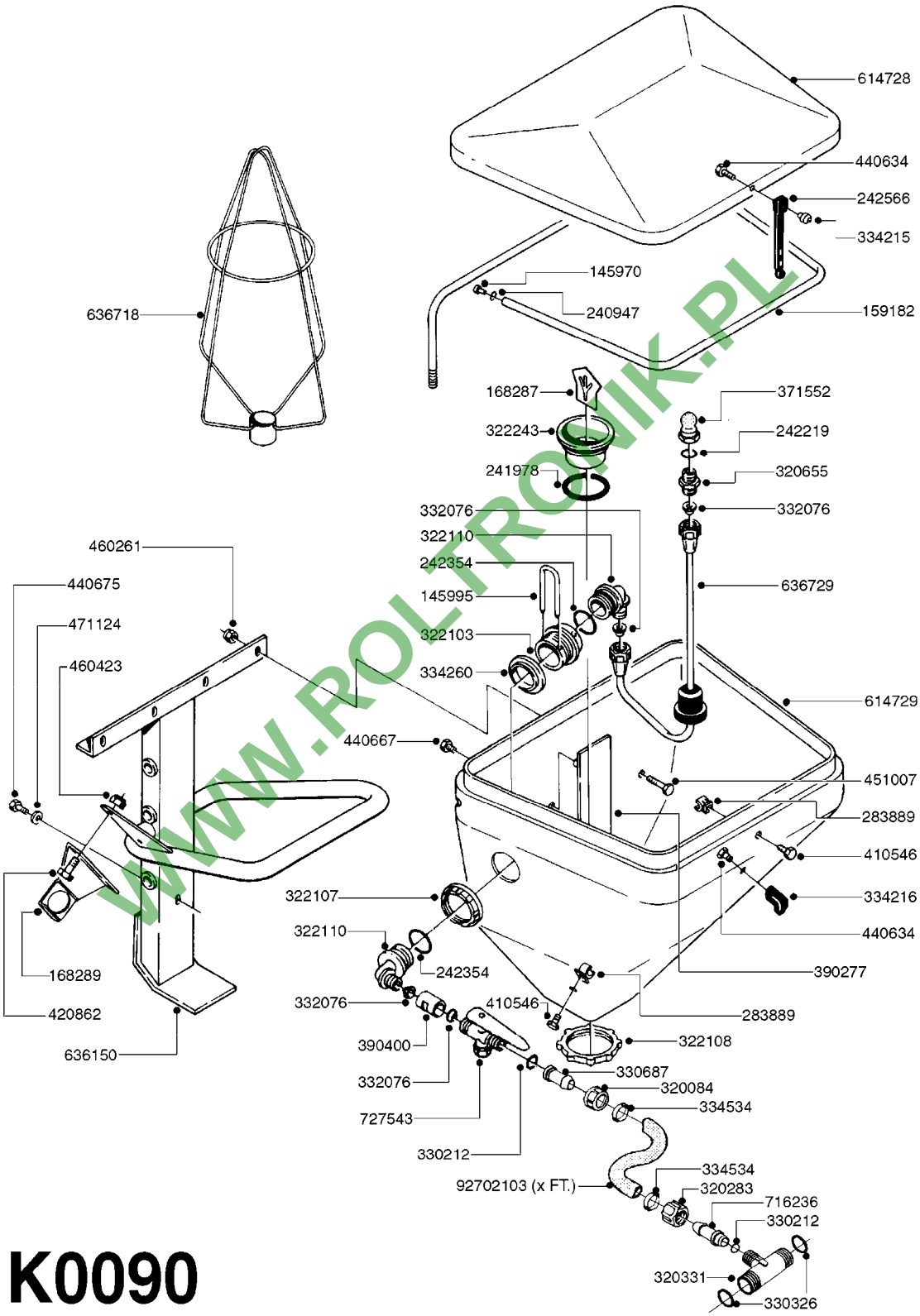

WWW.ROLTRONIK.PL

K0090

parts-nº	order qty	description
145970	1	PLUG MF 11 X 1
145995	1	FITT.DK S-53 FORK
159182	1	RINSING TUBE CHEM.FILL
168287	1	PLATE ANTI-VORTEX F.CHEM FILL
168289	1	BRACKET F. 3-WAY VALVE
240947	1	O-RING D7.3X2.4 NITRIL
241978	1	O-RING 64.5X3.0
242219	1	O-RING D16.3X2.4 VITON
242354	1	O-RING D32.2X3.0 VITON F.S-53
242566	1	LATCH STRAP F. CHEM.FILL
283889	1	CLIP F.TUBE SUPPORT
320084	1	FITT.DK NUT 1/2" BSP
320283	1	FITT.DK NUT 3/4"BSP
320331	1	FITT.DK TEE 1" - 1" - 3/4" BSP
320655	1	FITT.DK HN 1/2"-1/2" BSP
322103	1	FITT.DK S-53 BULKHEAD
322107	1	FITT.DK S-53 BULKHEAD NUT
322108	1	FITT.DK S-67 BULKHEAD NUT
322110	1	FITT.DK S-53 ELB. 1/2" BSP
322243	1	DRAIN PIPE/CHEM FIL.S67/S56
330212	1	O-RING D19/D14X2.4 F.1/2"NUT
330326	1	O-RING D30/D24X2 F.1"NUT
330687	1	FITT.DK HB 1/2" F. 1/2" NUT
332076	1	CONE INSERT F. ALUMINUM LANCE
334215	1	RUBBER
334216	1	RUBBER LATCH FOR CHEM.FILL
334260	1	GASKET F. S-53 BULKHEAD
334534	1	CLAMP HOSE PLASTIC 1/2"
371552	1	NOZZLE F.RINSING
390277	1	SCALE PLATE FOR HARDI FILLER
390400	1	FITT.DK BULKHEAD 1/2'X1/2'
410546	1	BOLT HEX SS M6X12 FT
420862	1	BOLT HEX 8.8 DEL M10X16 FT
440634	1	SCREW 5/8"
440667	1	SCREW M3.5X12 SLOT STAINLESS
440675	1	SCREW F. PLASTIC 5X16 SS
451007	1	SCREW M6X20 STAINLESS
460261	1	NUT HEX M6X1 LOCK A2 DIN985
460423	1	NUT HEX M10X1.5 LOCK
471124	1	WASHER, M6, Ø18/ 6.4X 1.6, SS
614728	1	LID FOR CHEM FILLER
614729	1	TANK HARDI FILLER
636150	1	FRAME FOR CHEM FILL TANK
636718	1	RINSE SUPPORT CHEM.FILL 25/35L
636729	1	TUBE F. RINSE CHEM FILL
716236	1	FITT.DK HB 1/2" ASSY. F. 3/4"
727543	1	VALVE F.CHEM FILL JUG RINSE
92702103	1	HOSE R X1/2" X300PSI WP X0012"

WWW.ROLTRONIK.PL

HARDI	**Agroparts: www.HARDI-INTERNATIONAL.com**	
	CHEMICAL FILLER-HOPPER(POST95) K0100-HIN, 01:01:16	Page 0 Date 16.03.2016 13:35

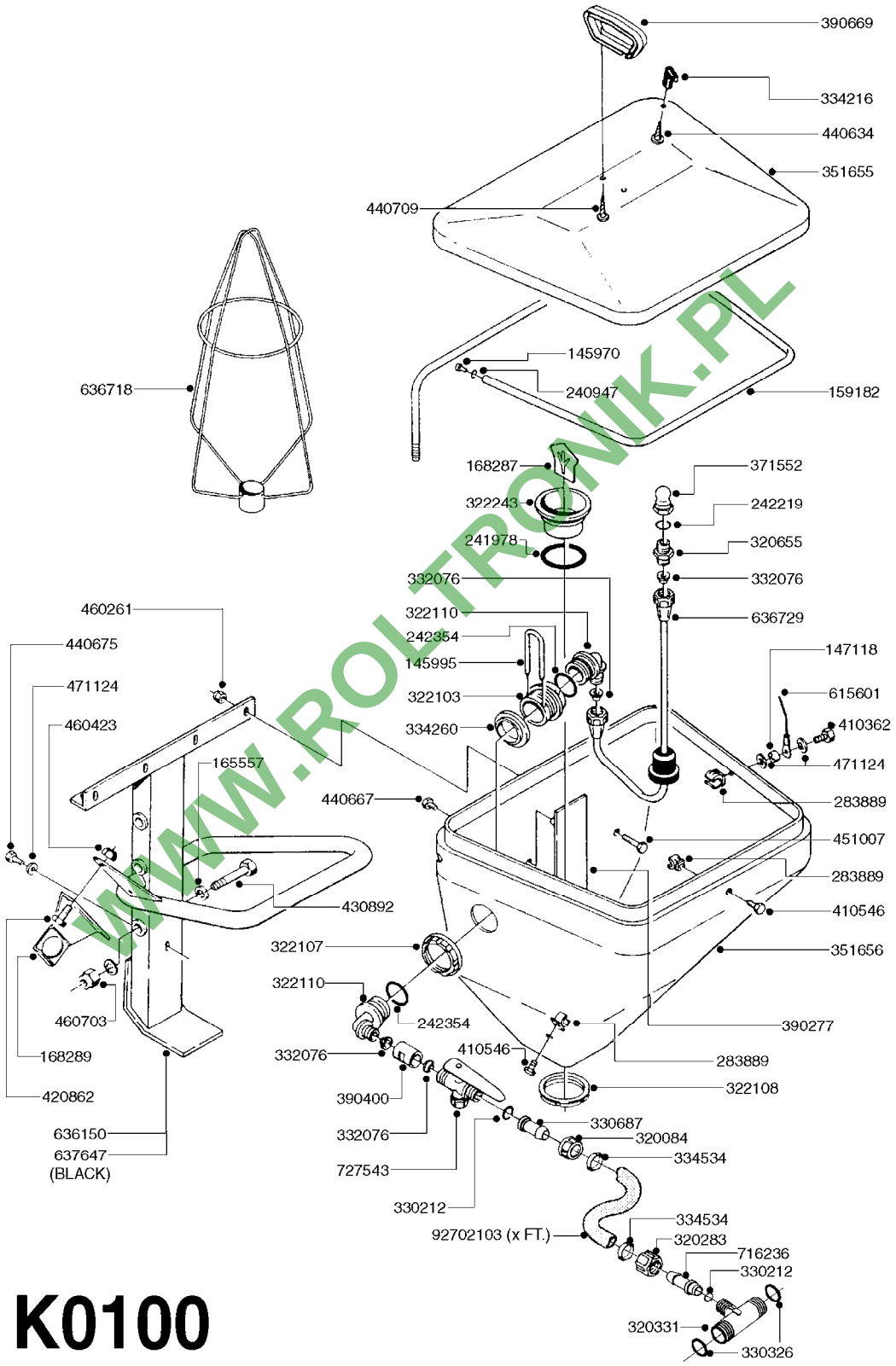

WWW.ROLTRONIK.PL

K0100

parts-nº	order qty	description
145970	1	PLUG MF 11 X 1
145995	1	FITT.DK S-53 FORK
147118	1	BUSHING 10,0/6,2 L=5 CHEM FILL
159182	1	RINSING TUBE CHEM.FILL
165557	1	WASHER D28.0/D12.2X2.0 SS
168287	1	PLATE ANTI-VORTEX F.CHEM FILL
168289	1	BRACKET F. 3-WAY VALVE
240947	1	O-RING D7.3X2.4 NITRIL
241978	1	O-RING 64.5X3.0
242219	1	O-RING D16.3X2.4 VITON
242354	1	O-RING D32.2X3.0 VITON F.S-53
283889	1	CLIP F.TUBE SUPPORT
320084	1	FITT.DK NUT 1/2" BSP
320283	1	FITT.DK NUT 3/4"BSP
320331	1	FITT.DK TEE 1" - 1" - 3/4" BSP
320655	1	FITT.DK HN 1/2"-1/2" BSP
322103	1	FITT.DK S-53 BULKHEAD
322107	1	FITT.DK S-53 BULKHEAD NUT
322108	1	FITT.DK S-67 BULKHEAD NUT
322110	1	FITT.DK S-53 ELB. 1/2" BSP
322243	1	DRAIN PIPE/CHEM FIL.S67/S56
330212	1	O-RING D19/D14X2.4 F.1/2"NUT
330326	1	O-RING D30/D24X2 F.1"NUT
330687	1	FITT.DK HB 1/2" F. 1/2" NUT
332076	1	CONE INSERT F. ALUMINUM LANCE
334216	1	RUBBER LATCH FOR CHEM.FILL
334260	1	GASKET F. S-53 BULKHEAD
334534	1	CLAMP HOSE PLASTIC 1/2"
351655	1	LID CHEM FILL.25L POST 95
351656	1	HOPPER F.CHEM FILL 25L POST'96
371552	1	NOZZLE F.RINSING
390277	1	SCALE PLATE FOR HARDI FILLER
390400	1	FITT.DK BULKHEAD 1/2'X1/2'
390669	1	HANDLE F.CHEM FILLER
410362	1	BOLT HEX 8.8 SS M6X20 FT
410546	1	BOLT HEX SS M6X12 FT
420862	1	BOLT HEX 8.8 DEL M10X16 FT
430892	1	BOLT HEX 8.8 DEL M12X110
440634	1	SCREW 5/8"
440667	1	SCREW M3.5X12 SLOT STAINLESS
440675	1	SCREW F. PLASTIC 5X16 SS
440709	1	SCREW 60X12 CHEM.FILL HANDLE
451007	1	SCREW M6X20 STAINLESS
460261	1	NUT HEX M6X1 LOCK A2 DIN985
460423	1	NUT HEX M10X1.5 LOCK
460703	1	NUT HEX M12X1.75 LOCK DIN985
471124	1	WASHER, M6, Ø18/ 6.4X 1.6, SS
615601	1	BUNGEE CORD 21-1/4"
636150	1	FRAME FOR CHEM FILL TANK
636718	1	RINSE SUPPORT CHEM.FILL 25/35L
636729	1	TUBE F. RINSE CHEM FILL
637647	1	BRACKET F.CHEMFILL
716236	1	FITT.DK HB 1/2" ASSY. F. 3/4"
727543	1	VALVE F.CHEM FILL JUG RINSE
92702103	1	HOSE R X1/2" X300PSI WP X0012"

WWW.ROLTRONIK.PL

CLEAN WATER TANK
K0130-HIN, 01:01:16

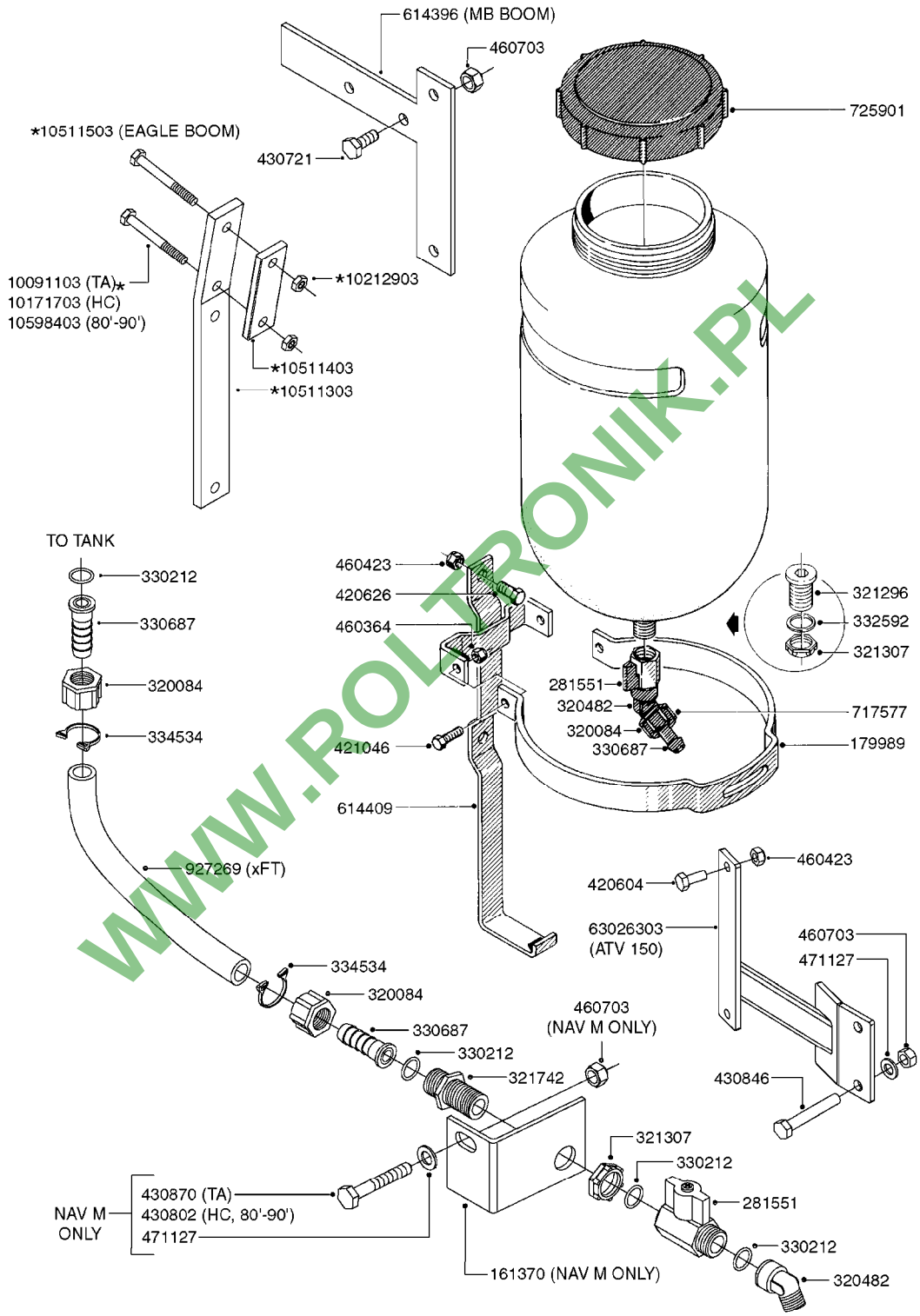

COMPLETE TANK ASSY : 722072

K0130

WWW.ROLTRONIK.PL

CLEAN WATER TANK
K0130-HIN, 01:01:16

parts-n°	order qty	description
161370	1	BKT.CLEAN WATER BOTT. VALVE
179989	1	BRKT. F. 3 GAL. TANK
281551	1	BALL VALVE 1/2"
320084	1	FITT.DK NUT 1/2" BSP
320482	1	FITT.DK ELB. 1/2" BSP 60 DEG.
321296	1	FITT.DK BULKHEAD 1/2" BSP SING
321307	1	FITT.DK NUT 1/2" BSP JAMB
321742	1	FITT.DK BULKHEAD 1/2' BSP
330212	1	O-RING D19/D14X2.4 F.1/2"NUT
330687	1	FITT.DK HB 1/2" F. 1/2" NUT
332592	1	O-RING D26/D20X3
334534	1	CLAMP HOSE PLASTIC 1/2"
420604	1	BOLT HEX 8.8 DEL M10X25 FT DIN933
420626	1	BOLT HEX 8.8 DEL M10X20 FT
421046	1	BOLT HEX 8.8 DEL M8X25 FT A2 DIN933
430721	1	BOLT HEX 8.8 DEL M12X40 FT
430802	1	BOLT HEX 8.8 DEL M12X75
430846	1	BOLT HEX 8.8 DEL M12X80
430870	1	BOLT HEX 8.8 DEL M12X55 FT
460364	1	NUT HEX M8 GALV.
460423	1	NUT HEX M10X1.5 LOCK
460703	1	NUT HEX M12X1.75 LOCK DIN985
471127	1	WASHER, M12, Ø24/13.0X 2.5, SS
614396	1	CLEAN WATER BRACKET MB
614409	1	BRACKET FOR FOAM MARKER
717577	1	VALVE F.CLEAN WATER TANK
722072	1	CLEAN WATER TANK W FRAME & TAP
725901	1	LID F.WATER BOTTLE VENTED
927269	1	HOSE R X PVC X 1/2 X 0012"
10091103	1	BOLT HEX 3/8 NC GR.2 03.00'
10171703	1	BOLT HEX 3/8 NC GR.2 03.50"
10212903	1	NUT HEX NC (NYLON LOCK) 3/8"
10511303	1	FLATBAR L350/17DEG.CLEAN WATER
10511403	1	FLATBAR 104MM CLEAN WATER
10511503	1	BKT.CLEAN WATER MOUNT EAGLE
10598403	1	BOLT HEX HCS3/8-16 X 4 Z 5
63026303	1	CLEAN WATER TANK BRKT, ATV

WWW.PO.TRONIK.PL

HARDI	**Agroparts: www.HARDI-INTERNATIONAL.com**	
	DRAIN ASSEMBLY-PULL CORD TYPE K0180-HIN, 01:01:16	Page 0 Date 16.03.2016 13:35

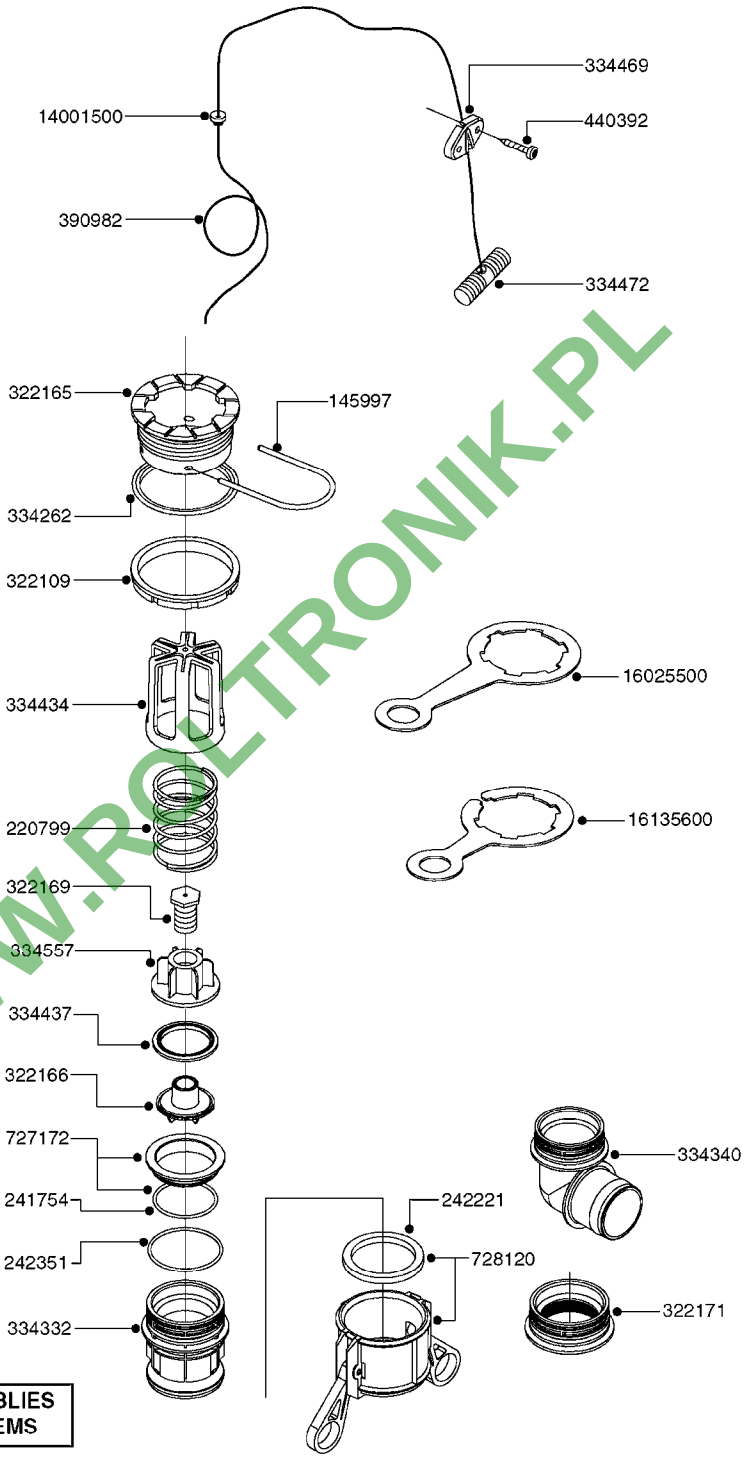

WWW.ROLTRONIK.PL

COMPLETE ASSEMBLIES
WHOLEGOODS ITEMS

727617 - COMPLETE ASSEMBLY (2" BSP THREADED FITTING & 126" CORD)
727742 - COMPLETE ASSEMBLY (2-1/2" ELBOW & 157.5" CORD)

K0180

DRAIN ASSEMBLY-PULL CORD TYPE
K0180-HIN, 01:01:16

parts-n°	order qty	description
145997	1	FITT.DK S-93 FORK
220799	1	SPRING F.TOP DRAIN
241754	1	O-RING D59.5X3
242221	1	GASKET F. S-93 QUICK COUPLERS
242351	1	O-RING D69.5X3.0 VITON F.S-93
322109	1	FITT.DK S-93 BULKHEAD NUT
322165	1	FITT.DK S-93 BULKHEAD SINGLE
322166	1	VALVE FLAP LOWER PART
322169	1	CORD PLUG F.TOP DRAIN
322171	1	FITT.DK S-93 THREAD INS.2"BSP
334262	1	GASKET F.S-93 BULKHEAD
334332	1	FITT.DK S-93 MALE QUICK COUP.
334340	1	FITT.DK S-93 ELBOW 2.5"
334434	1	CAGE F.SPRING BOTTOM DRAIN ASY
334437	1	SEAL FOR VALVE FLAP
334469	1	CLEVIS F.CORD TOP DRAIN ASSY.
334472	1	HANDLE FOR TOP DRAIN
334557	1	SPRING SEAT TOP DRAIN
390982	1	CORD NYLON 4000MM
440392	1	SCREW 6.3 X 25.0 DIN7981C TORX
727172	1	FITT.DK S-93 SEAT INSERT
727617	1	FITT.DK S-93 BOTTOM VALVE 2'
727742	1	TOP DRAIN CORD TYPE
728120	1	QUICK COUPLER CAP F.S93 DRAIN
14001500	1	GROMMET F.TOP DRAIN CORD
16025500	1	TANK SPACER SIGHT GAUGE
16135600	1	GUIDE FOR SIGHT GAUGE NAV/NCM

WWW.ROLTRONIK.PL

HARDI	**Agroparts: www.HARDI-INTERNATIONAL.com**	
	END NOZZLE KIT K0230-HIN, 01:01:16	Page 0 Date 16.03.2016 13:35

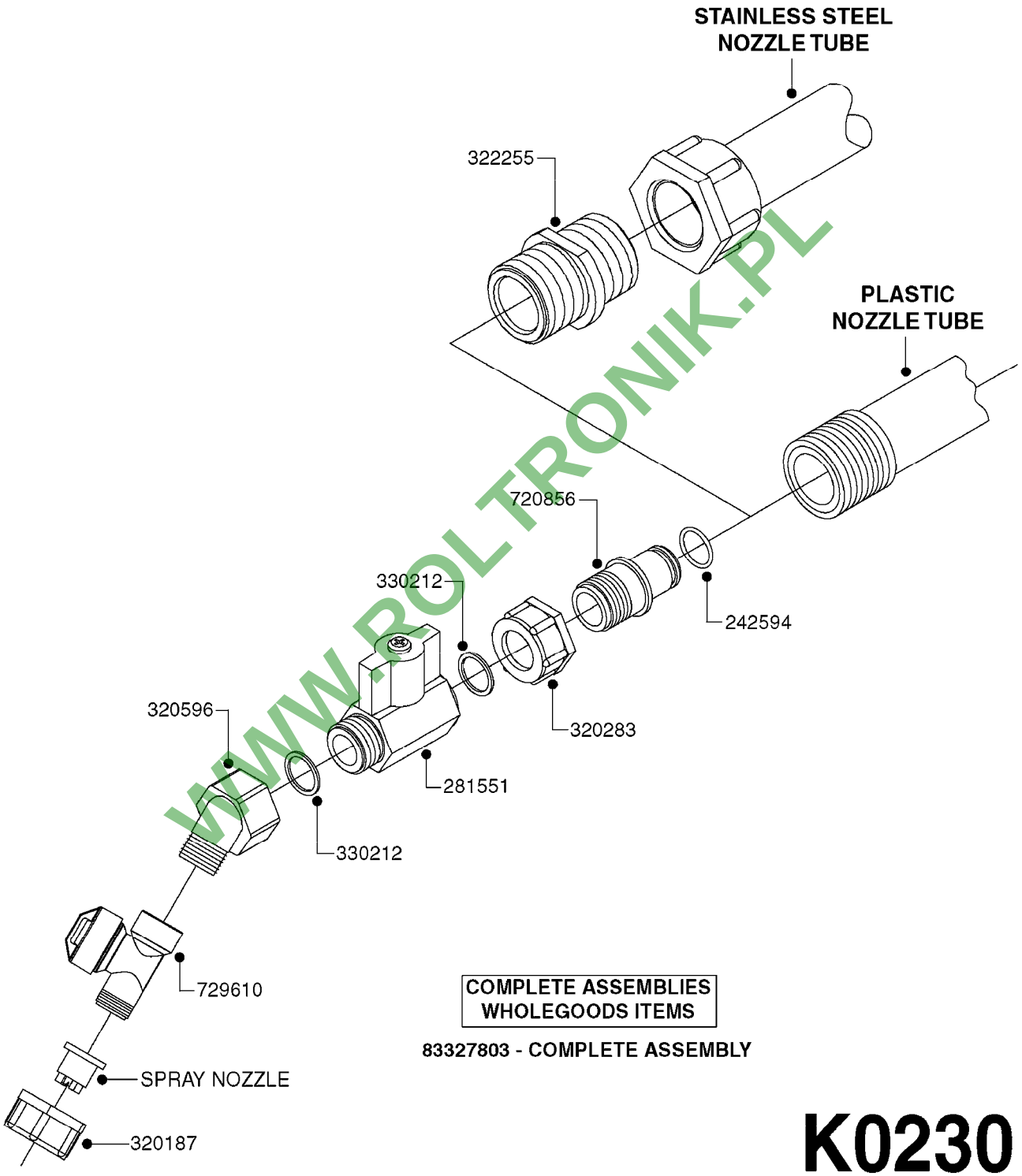

COMPLETE ASSEMBLIES
WHOLEGOODS ITEMS

83327803 - COMPLETE ASSEMBLY

K0230

WWW.ROLTRONIK.PL

Agroparts: www.HARDI-INTERNATIONAL.com

END NOZZLE KIT
K0230-HIN, 01:01:16

Page 1

Date 16.03.2016 13:35

parts-n°	order qty	description
242594	1	O-RING D14 X 1.78 SCH.70-EPDM
281551	1	BALL VALVE 1/2"
320187	1	FITT.DK CAP 3/8" BSP BLACK
320283	1	FITT.DK NUT 3/4"BSP
320596	1	FITT.DK ELB 3/8'-1/2'BSP 45DEG
322255	1	FITT.DK NIPPLE 3/4"X 3/4"
330212	1	O-RING D19/D14X2.4 F.1/2"NUT
720856	1	FITT.DK 1/2'BSP ASSY.F.3/4'NUT
729610	1	NOZZLE ASSY. NON DRIP 3/8 THRD
83327803	1	END NOZZLE KIT "04"

WWW.ROLTRONIK.PL

HARDI	**Agroparts: www.HARDI-INTERNATIONAL.com**	
	ELECTRIC END NOZZLE KIT '09 K0250-HIN, 01:01:16	Page 0
		Date 16.03.2016 13:35

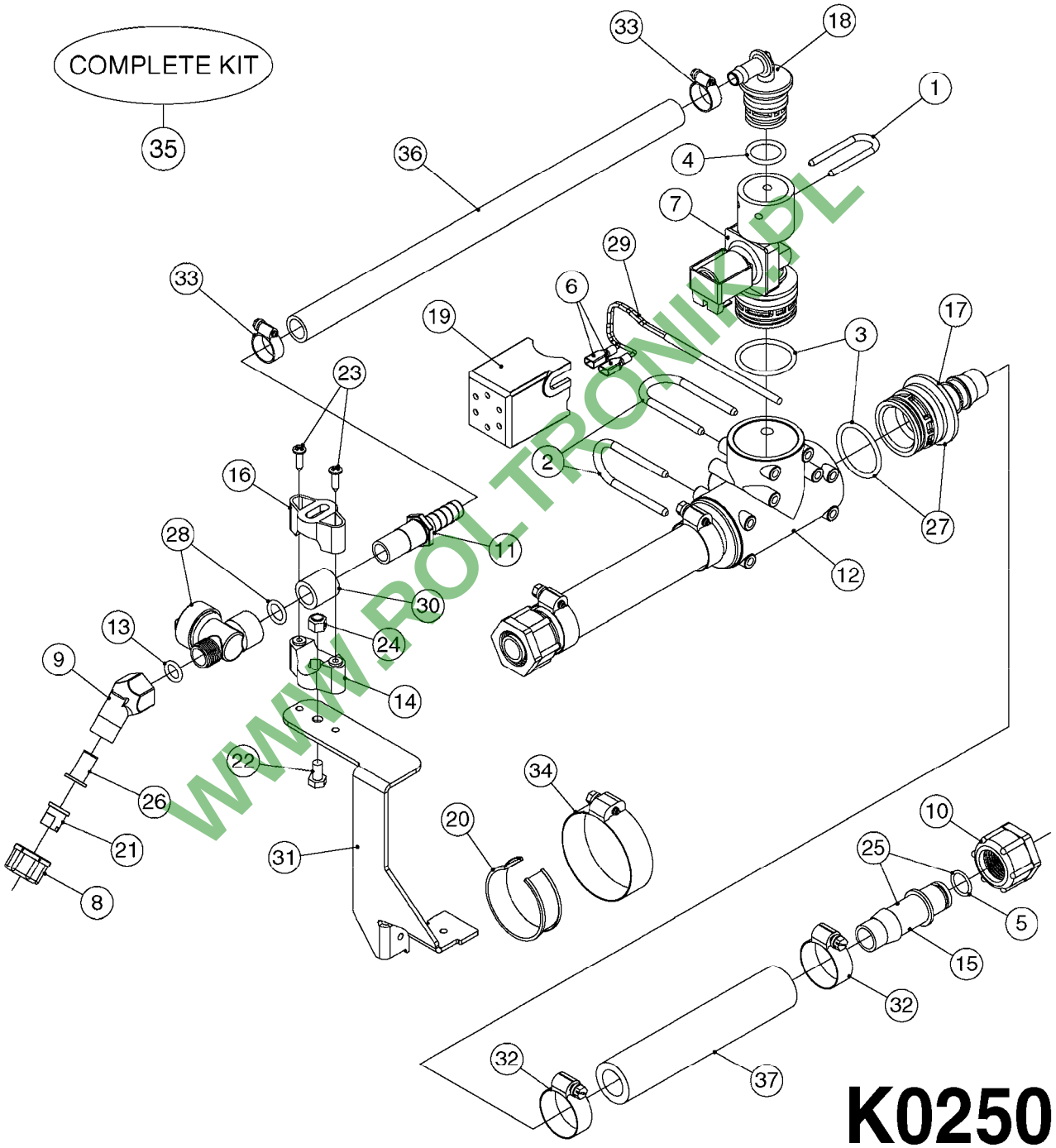

WWW.ROLTRONIK.PL

K0250

ELECTRIC END NOZZLE KIT '09
K0250-HIN, 01:01:16

Pos.	parts-nº	order qty	description
1	145994	1	FITT.DK S-40 FORK
2	145995	1	FITT.DK S-53 FORK
3	242354	1	O-RING D32.2X3.0 VITON F.S-53
4	242355	1	O-RING D19.2X3.0 VITON F.S-40
5	242594	1	O-RING D14 X 1.78 SCH.70-EPDM
6	261539	1	SPADE F.ELEC CONNEC BLUE INSUL
7	262104	1	VALVE, SOLENOID, S53/S40
8	320187	1	FITT.DK CAP 3/8" BSP BLACK
9	320191	1	FITT.DK ELB 3/8' BSP 45 DEGREE
10	320283	1	FITT.DK NUT 3/4"BSP
11	320891	1	FITT.DK HB 3/8'- 3/8' BSP
12	322352	1	FITT.DK S-53 TEE
13	330013	1	O-RING D15/D10X2.5 F.3/8"NUT
14	333012	1	NOZZLE HOLD. UPPER PART
15	334044	1	FITT.DK HB 3/4' F. 3/4' CAP
16	334220	1	YOKE, UPPER NOZZLE BODY
17	334229	1	FITT.DK S-53 STR.3/4"
18	334237	1	FITT.DK S-40 ELB.3/8'
19	334965	1	COVER FOR S53 SOLENOID VALVE
20	341291	1	RUBBER HOSE CLAMP COVER 130MM
21	370392	1	NOZZLE END FAN 1850-G 300
22	410546	1	BOLT HEX SS M6X12 FT
23	440665	1	SCREW M4.2X16 STAINLESS
24	460261	1	NUT HEX M6X1 LOCK A2 DIN985
25	724621	1	FITT.DK HB 3/4"ASSY F.3/4" NUT
26	725042	1	SCREEN 80 MESH W.GASKET, RED
27	726558	1	FITT.DK S53 STR. 3/4" W.ORING
28	729610	1	NOZZLE ASSY. NON DRIP 3/8 THRD
29	983087	1	ELEC. CABLE 2 WIRE X 0.75MM
30	10631003	1	HOSE R X CLEAR BRAID.X 1/2 12"
31	16110803	1	NOZZLE BRACKET VAR SPACINGS
32	28029903	1	CLAMP HOSE GEAR P3/4"-S1" 6712
33	28044903	1	CLAMP HOSE GEAR P3/8" 6706
34	28047003	1	CLAMP HOSE GEAR 30 X 50 6732
35	82613203	1	ELECTRIC END NOZZLE KIT 2009
36	92701703	1	HOSE R X3/8" X300PSI WP X0012"
37	92703203	1	HOSE R X3/4" X300PSI WP X0012"

WWW.PODTROPNIK.PL

HARDI	**Agroparts: www.HARDI-INTERNATIONAL.com**	
	ELECTRIC END NOZZLE KIT '12 K0260-HIN, 01:01:16	Page 0 Date 16.03.2016 13:35

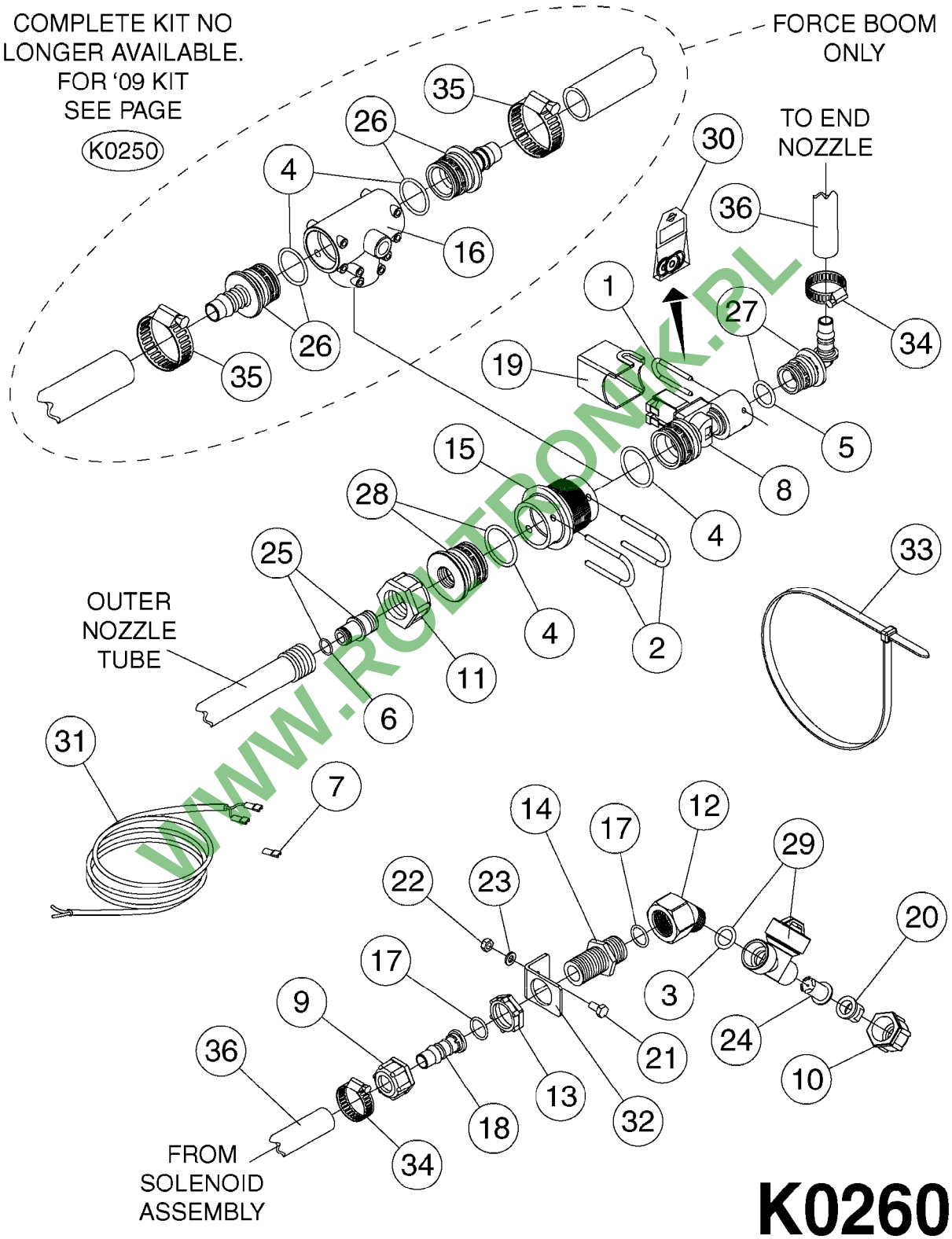

WWW.ROLTRONIK.PL

ELECTRIC END NOZZLE KIT '12
K0260-HIN, 01:01:16

Pos.	parts-nº	order qty	description
1	145994	1	FITT.DK S-40 FORK
2	145995	1	FITT.DK S-53 FORK
3	240177	1	O-RING D16.1/11.3 X 2.4
4	242354	1	O-RING D32.2X3.0 VITON F.S-53
5	242355	1	O-RING D19.2X3.0 VITON F.S-40
6	242594	1	O-RING D14 X 1.78 SCH.70-EPDM
7	261539	1	SPADE F.ELEC CONNEC BLUE INSUL
8	262104	1	VALVE, SOLENOID, S53/S40
9	320084	1	FITT.DK NUT 1/2" BSP
10	320187	1	FITT.DK CAP 3/8" BSP BLACK
11	320283	1	FITT.DK NUT 3/4"BSP
12	320596	1	FITT.DK ELB 3/8'-1/2'BSP 45DEG
13	321307	1	FITT.DK NUT 1/2" BSP JAMB
14	321742	1	FITT.DK BULKHEAD 1/2' BSP
15	322103	1	FITT.DK S-53 BULKHEAD
16	322352	1	FITT.DK S-53 TEE
17	330212	1	O-RING D19/D14X2.4 F.1/2"NUT
18	330687	1	FITT.DK HB 1/2" F. 1/2" NUT
19	334965	1	COVER FOR S53 SOLENOID VALVE
20	370366	1	NOZZLE END FAN 1850-G 150
21	410185	1	BOLT HEX 8.8 DEL M6X16 A2
22	460261	1	NUT HEX M6X1 LOCK A2 DIN985
23	471125	1	WASHER, M6, Ø12/ 6.4X 1.6, SS
24	614366	1	FILTER 50 MESH F.NOZZLE BLUE
24	614367	1	FILTER 80 MESH F.NOZZLE RED
24	614368	1	FILTER 100 MESH F.NOZZLE YEL.
25	720856	1	FITT.DK 1/2'BSP ASSY.F.3/4'NUT
26	726558	1	FITT.DK S53 STR. 3/4" W.ORING
27	726567	1	FITT.DK S-40 ELB.1/2" W.ORING
28	726694	1	PLUG,S53,1/2"FBSP THD W.ORING
29	729610	1	NOZZLE ASSY. NON DRIP 3/8 THRD
30	750722	1	REPAIR KIT FOR 3S SC CONTROL
31	983087	1	ELEC. CABLE 2 WIRE X 0.75MM
32	16180100	1	PLATE, END ROW NOZZLE
33	28025203	1	TIE STRAP L=23" x W=1/2"
34	28029803	1	CLAMP HOSE GEAR P1/2" 6708
35	28029903	1	CLAMP HOSE GEAR P3/4"-S1" 6712
36	92702103	1	HOSE R X1/2" X300PSI WP X0012"

WWW.PO-TRON.PL

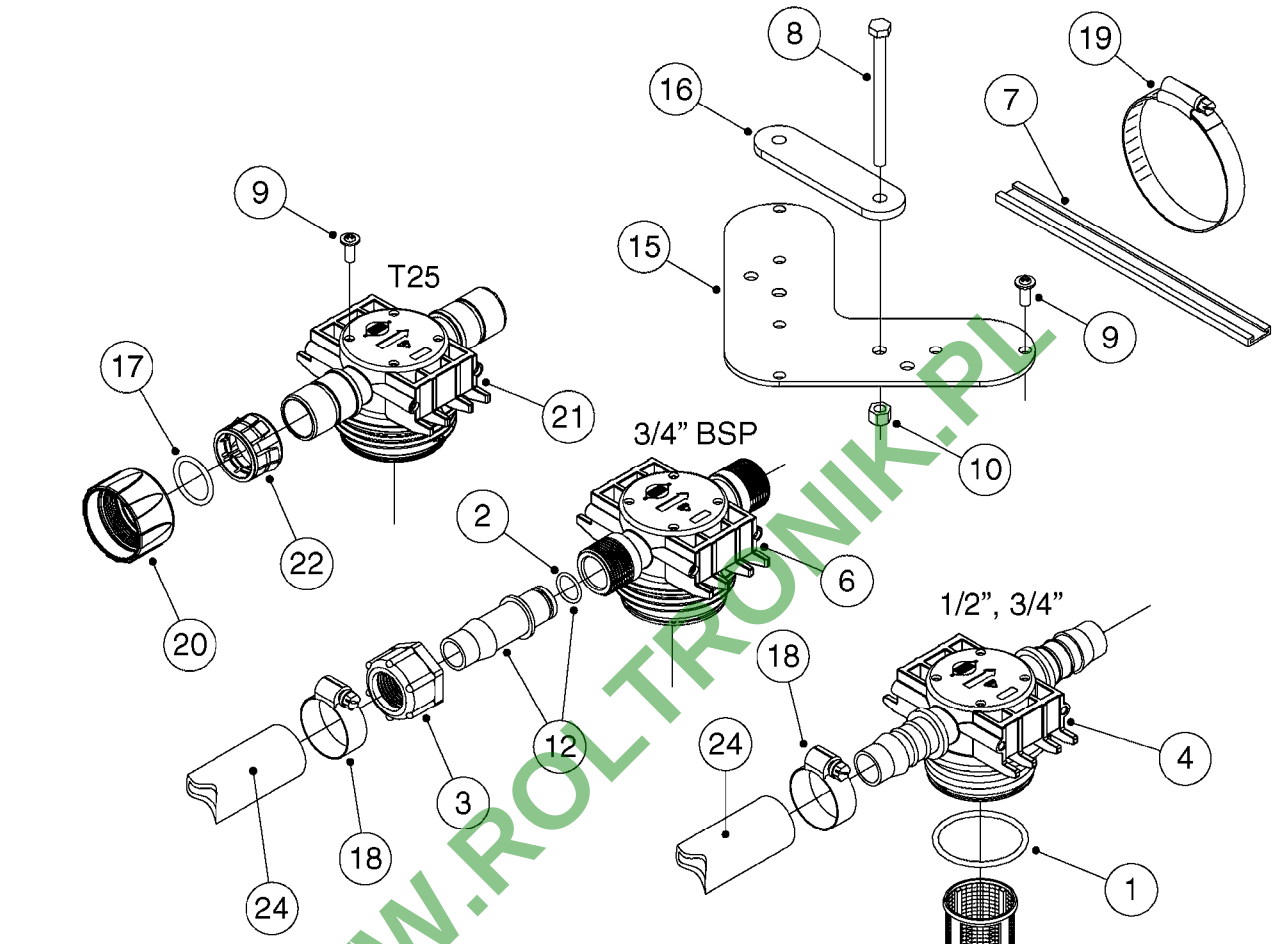

COMPLETE ASSEMBLIES

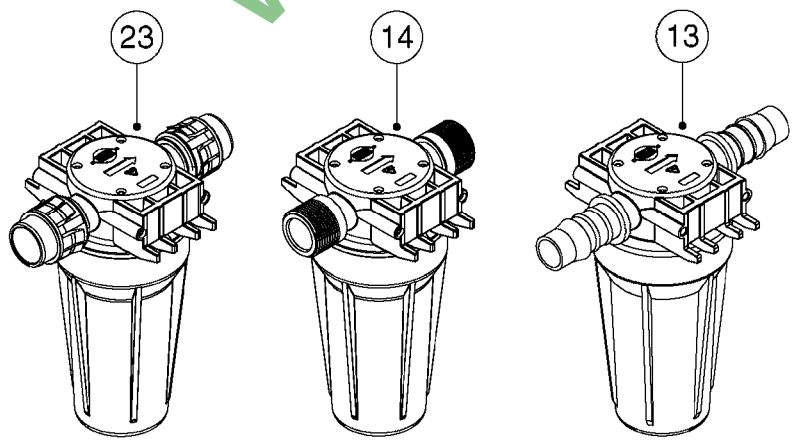

K0270

WWW.ROLTRONIK.PL

FILTER ASSEMBLIES-IN LINE
K0270-HIN, 01:01:16

Date 16.03.2016 13:35

Pos.	parts-n°	order qty	description
1	240925	1	O-RING D49.5X3 NITRIL
2	242594	1	O-RING D14 X 1.78 SCH.70-EPDM
3	320283	1	FITT.DK NUT 3/4"BSP
4	322241	1	FILTER HOUSING W.3/4' BARBS
4	322249	1	FILTER HOUSING W.1/2' BARBS
5	322242	1	FILTER BOWL / IN-LINE
6	322250	1	FILTER HOUSING W.3/4"BSP THRD
7	341291	1	RUBBER HOSE CLAMP COVER 130MM
7	341292	1	RUBBER HOSE CLAMP COVER 180MM
8	410605	1	BOLT HEX 8.8 DEL M6X80
9	440673	1	SCREW F.PLASTIC 5X12 SS
10	460261	1	NUT HEX M6X1 LOCK A2 DIN985
11	615443	1	FILTER ELEM.50 MESH BLUE
11	615444	1	FILTER ELEM.80 MESH RED
11	615445	1	FILTER ELEM.100 MESH YELLOW
12	716236	1	FITT.DK HB 1/2" ASSY. F. 3/4"
12	724621	1	FITT.DK HB 3/4"ASSY F.3/4" NUT
13	845205	1	FILTER IN-LINE 1/2' 50 MESH
13	845208	1	FILTER IN-LINE 3/4' 50 MESH
13	845209	1	FILTER IN-LINE 3/4' 80 MESH
14	845218	1	FILTER IN-LINE 3/4' 50 MESH OML
14	845219	1	FILTER IN-LINE 3/4' 80 MESH OML
15	16022203	1	PLATE 3.0 X 55 X 196
16	16022403	1	BRACKET 60MM TUBE
17	24263000	1	O-RING Ø24.4 X 3.1 NITRIL SH70
18	28029903	1	CLAMP HOSE GEAR P3/4"-S1" 6712
19	28047103	1	CLAMP HOSE GEAR 50 X 50 6740
19	28047203	1	CLAMP HOSE GEAR 60 X 80 6756
20	32239700	1	FITT.DK NUT T25
21	32239800	1	FITT.DK IN-LINE FILTER TOP T25
22	33515500	1	FITT.DK NUT LOCK RING T25
23	72700600	1	FILTER IN-LINE 80 MESH, T25
24	92702103	1	HOSE R X1/2" X300PSI WP X0012"
24	92703203	1	HOSE R X3/4" X300PSI WP X0012"

WWW.PCTRONIK.PL

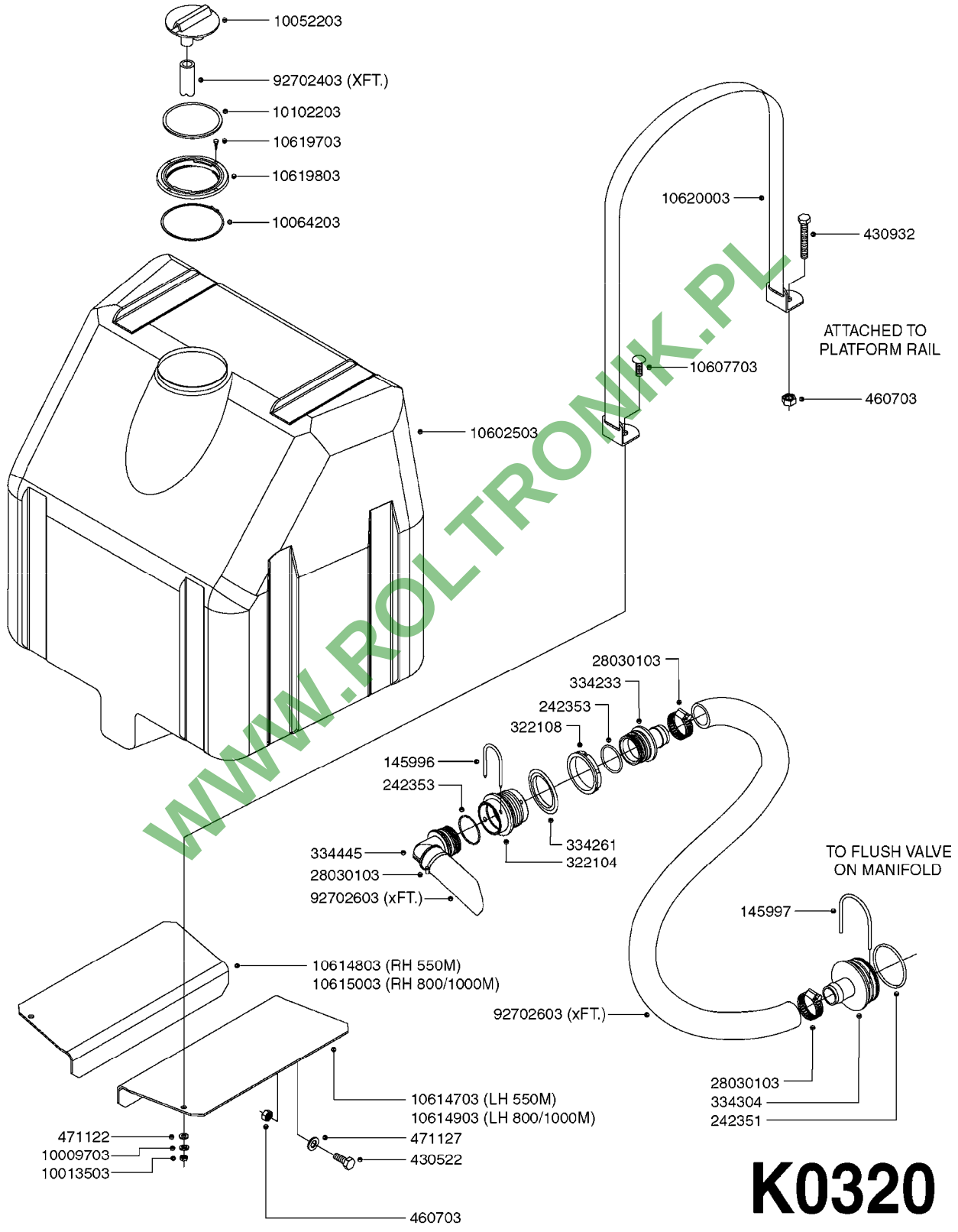

WWW.ROLTRONIK.PL

Agroparts: www.HARDI-INTERNATIONAL.com

FLUSH SYSTEM TANK MOUNT NAV-M
K0320-HIN, 01:01:16

Date 16.03.2016 13:35

parts-n°	order qty	description
145996	1	FITT.DK S-67 FORK
145997	1	FITT.DK S-93 FORK
242351	1	O-RING D69.5X3.0 VITON F.S-93
242353	1	O-RING D44.2X3.0 VITON F.S-67
322104	1	FITT.DK S-67 BULKHEAD
322108	1	FITT.DK S-67 BULKHEAD NUT
334233	1	FITT.DK S-67 STR.1-1/2' RUBBER
334261	1	GASKET F. S-67 BULKHEAD
334304	1	FITT.DK S-93 STR.1-1/2" PVC
334445	1	FITT.DK S-67 ELB.1-1/2"
430522	1	BOLT HEX 8.8 DEL M12X25 FT
430932	1	BOLT HEX 8.8 DEL M12X130 FT
460703	1	NUT HEX M12X1.75 LOCK DIN985
471122	1	WASHER, M10, Ø20/10.5X 2.0, SS
471127	1	WASHER, M12, Ø24/13.0X 2.5, SS
10009703	1	WASHER LOCK L/W Z 3/8"
10013503	1	NUT HEX NC 3/8"
10052203	1	LID VENT ASSY
10064203	1	SET SEALING SPONGE 1 Ft BULK
10102203	1	GASKET F.16" LID BREATHER
10602503	1	TANK F. FLUSH SYS. 90G NAV.M.
10607703	1	BOLT CARRIAGE 3/8'x1' ZINC
10614703	1	FLUSH TANK BKT. LH NAV550
10614803	1	FLUSH TANK BKT. RH NAV550
10614903	1	FLUSH TANK BKT. LH NAV8/1000
10615003	1	FLUSH TANK BKT. RH NAV8/1000
10619703	1	SCREW SS #6x3/4' SELF TAPPING
10619803	1	LID HOUSING TREADED F. 6'
10620003	1	STRAP F.90GAL FL.TK. NAV 58.2"
28030103	1	CLAMP HOSE GEAR P5/4-S1.5"6724
92702403	1	HOSE PVC SUCT GRAY 1"
92702603	1	HOSE PVC SUCT GRAY 1-1/2"

WWW.ROLTRONIK.PL

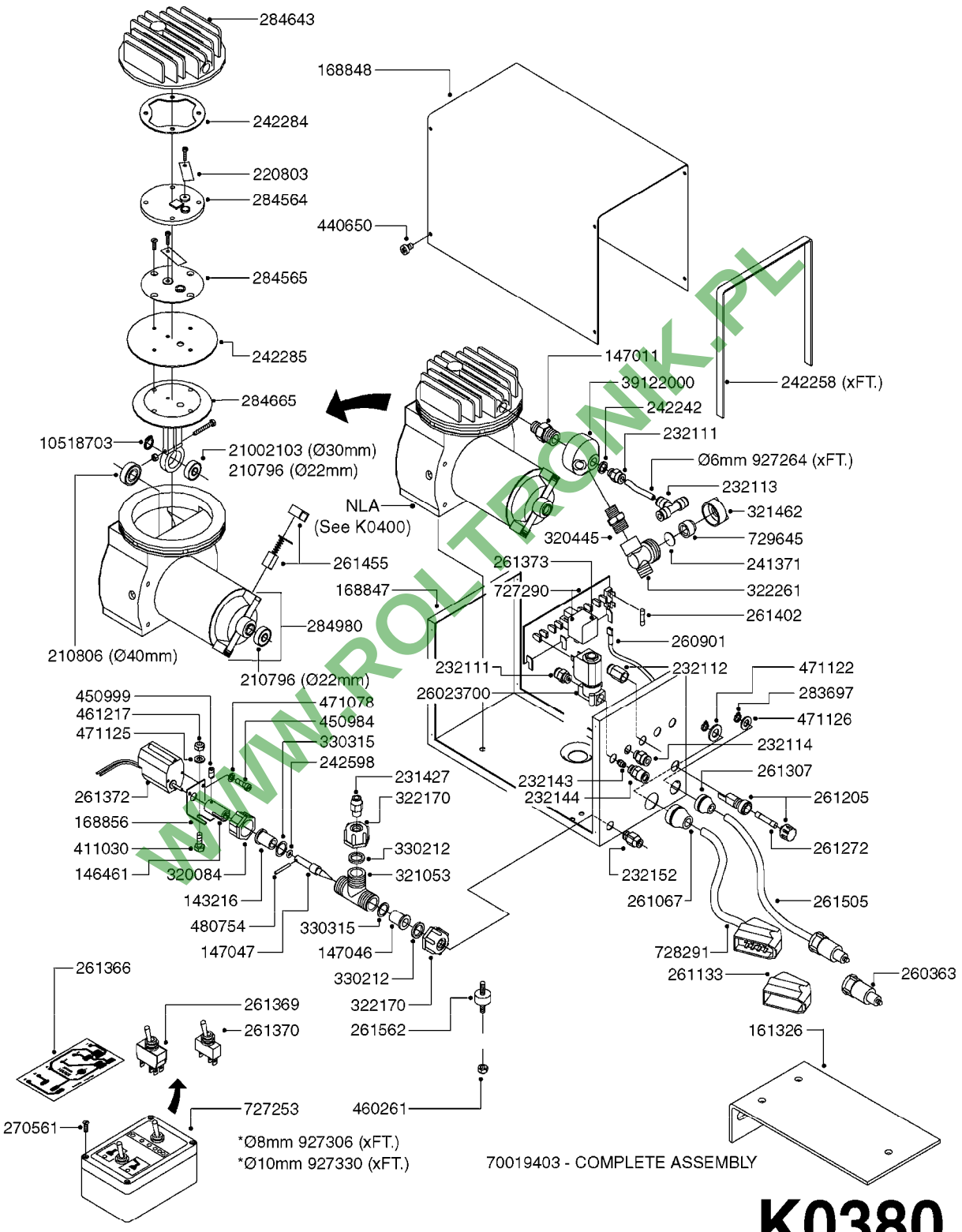

WWW.ROLTRONIK.PL

parts-n°	order qty	description
143216	1	BUSHING THREAD F.FOAM MARKER
146461	1	COUPLER F.THROTTLE VALVE
147011	1	HEX NIPPLE 3/8'X1/4'BSP BRASS
147046	1	SEAT FOR THROTTLE VALVE
147047	1	SPINDLE FOR THROTTLE VALVE
161326	1	MOUNT BKT. F. FOAM COMP.BOX 98
168847	1	ENCLOSURE LOWER F.MARKER
168848	1	COVER F. FOAM MARKER
168856	1	MOUNT FOR GEAR MOTOR
210796	1	BEARING BALL D22/D8 X 7 608ZZ
210806	1	BEARING BALL D40/D17X12MM
220803	1	VALVE F. COMPRESSOR
231427	1	COUPLER 1/8'THREAD X6MM HOSE
232111	1	QUICK COUPLER 6MM X 1/8 EXT.
232112	1	QUICK COUPLER 6MM 1/8 INT.
232113	1	QUICK COUPLER 6MM T-PIECE
232114	1	COUPLER 1/8" THREADX8MM HOSE
232143	1	REDUCER 1/4'INT-1/8'EXT
232144	1	QUICK COUPLER 10MM X 1/4 EXT
232152	1	QUICK COUPLER 8MMX1/8 EXT.LONG
241371	1	DIAPHRAGM, NO-DRIP alt 241371
242242	1	O-RING F.AIR HOSE FITTING
242258	1	TRIM 3X10 SELF ADHESIVE 0012"
242284	1	HEAD GASKET F. COMPRESSOR
242285	1	DIAPHRAGM F. F/M COMP.
242598	1	O-RING D7.0 X 2.5 NITRIL
260363	1	PLUG 2 POLE 12V
260901	1	SPADE F.ELEC CONN.1.5MM BLUE
261067	1	GROMMET 10-14 GREY
261133	1	PLUG HOUSING F.8 POLE PLUG
261205	1	FUSE HOLDER
261272	1	FUSE 10A D6X32 MM
261307	1	GROMMET 7-10 BLACK
261366	1	CIRCUIT BOARD F.F/M CONTROL
261369	1	SWITCH 2 WAY 12V SPRING RETURN
261370	1	SWITCH 2 WAY 12V
261372	1	GEAR MOTOR BOSCH 13RPM
261373	1	RELAY 12V/30W
261402	1	FUSE 3.15A SLOW BURN
261455	1	BRUSH KIT-FOAM MARKER MOTOR
261505	1	CABLE 2X4MM L8000MM
261562	1	RUBBER DAMPER 2XM6X25
270561	1	SCREW W/SPRING ASSY. (QTY 1)
283697	1	TIESTRAP 200MM
284564	1	PLATE F.COMPRESSOR HEAD
284565	1	PLATE F.COMPRESSOR HEAD
284643	1	COMPRESSOR HEAD F.FOAM MARKER
284665	1	CONNECTING ROD F.COMPRESSOR
284980	1	FLANGE REAR F. F.M.COMPRESSOR
320084	1	FITT.DK NUT 1/2" BSP
320445	1	FITT.DK HN 1/4"X3/8" BSP
321053	1	FITT.DK TEE 1/2 X1/2 X1/2" BSP
321462	1	CAP F.NO-DRIP ASSY.
322170	1	FITT.DK NUT 1/2"x 1/8"F BSP
322261	1	HOUSING F.SAFETY VALVE 3/8"
330212	1	O-RING D19/D14X2.4 F.1/2"NUT
330315	1	O-RING D18.4/D13X.6
411030	1	BOLT HEX M5X10
440650	1	SCREW 3.5x13 STAINLESS
450984	1	BOLT HEX M2.5X8 SLOTTED
450999	1	SCREW SET M3X8

WWW.ROLTRONIK.PL

parts-n°	order qty	description
460261	1	NUT HEX M6X1 LOCK A2 DIN985
461217	1	NUT HEX M5 LOCK
471078	1	WASHER D2.7/D5
471122	1	WASHER, M10, Ø20/10.5X 2.0, SS
471125	1	WASHER, M6, Ø12/ 6.4X 1.6, SS
471126	1	WASHER, M8, Ø16/ 8.4X 1.6, SS
480754	1	PIN D2 X 16
727253	1	CONTROL BOX FOR FOAM MARKER
727290	1	CIRCUIT BOARD F. F-M W. RELAY
728291	1	CABLE 7x.5 L8000MM+8 POL.CONN.
729645	1	NON-DRIP SPRING ASSY.GREEN 10
927264	1	HOSE R X PE D6/D4 X 0012"
927306	1	HOSE R X PE D8/D6 X 0012"BLACK
927330	1	HOSE R X PE D10/D8 X 012"BLACK
10518703	1	SNAP-RING OUTER 8X1
21002103	1	BEARING, 6200 2ZJEM (SKF)
26023700	1	SOLENOID VAL 12V 1/8' FLO '07
39122000	1	DISTR.HOUSING F.FOAM MARKER'07
70019403	1	FOAM MARKER COMPRESSOR KIT STD

WWW.ROLTRONIK.PL

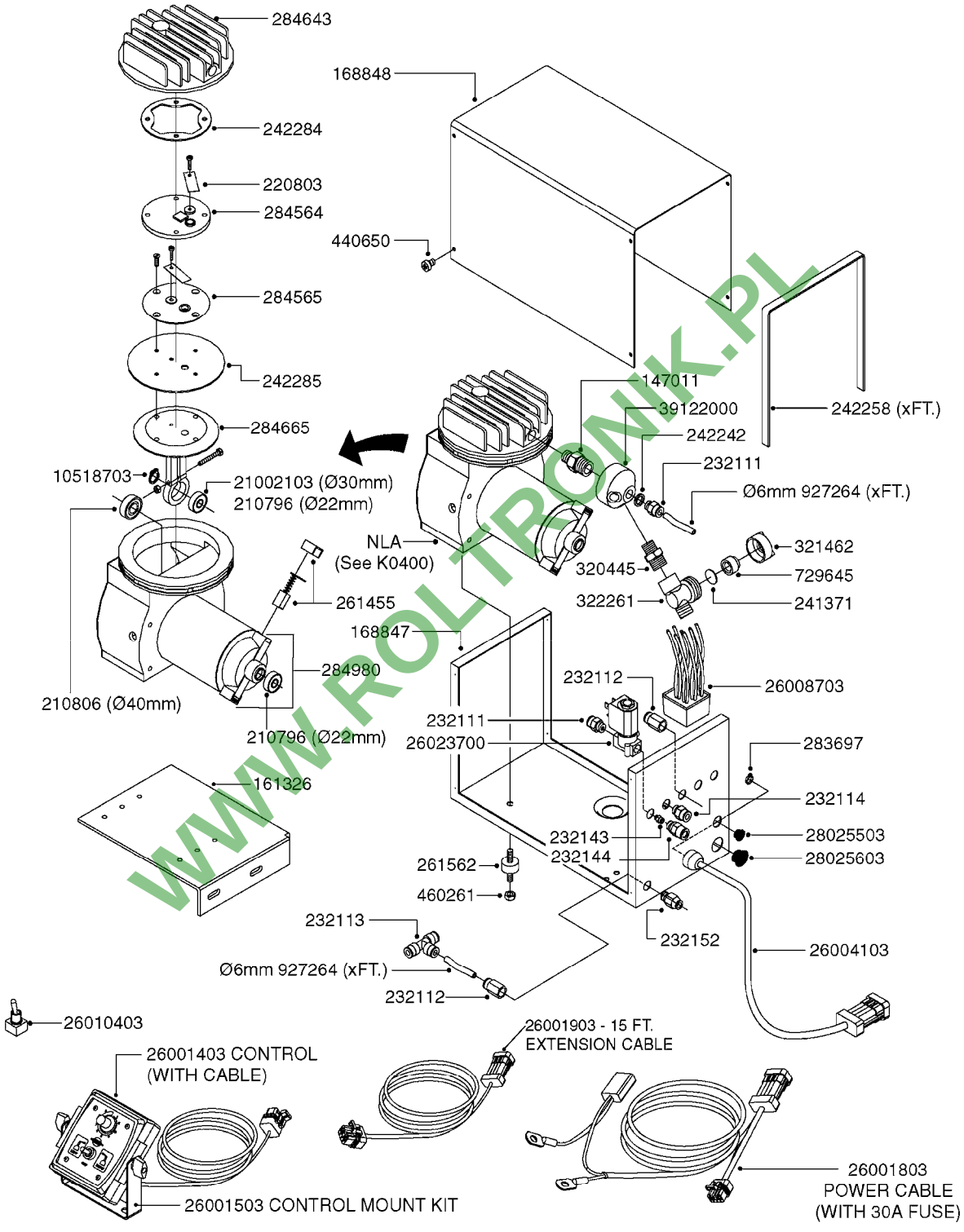

K0390

*Ø8mm 927306 (xFT.)
*Ø10mm 927330 (xFT.)

70019403 - COMPLETE ASSEMBLY

WWW.ROLTRONIK.PL

parts-nº	order qty	description
147011	1	HEX NIPPLE 3/8'X1/4'BSP BRASS
161326	1	MOUNT BKT. F. FOAM COMP.BOX 98
168847	1	ENCLOSURE LOWER F.MARKER
168848	1	COVER F. FOAM MARKER
210796	1	BEARING BALL D22/D8 X 7 608ZZ
210806	1	BEARING BALL D40/D17X12MM
220803	1	VALVE F. COMPRESSOR
232111	1	QUICK COUPLER 6MM X 1/8 EXT.
232112	1	QUICK COUPLER 6MM 1/8 INT.
232113	1	QUICK COUPLER 6MM T-PIECE
232114	1	COUPLER 1/8" THREADX8MM HOSE
232143	1	REDUCER 1/4'INT-1/8'EXT
232144	1	QUICK COUPLER 10MM X 1/4 EXT
232152	1	QUICK COUPLER 8MMX1/8 EXT.LONG
241371	1	DIAPHRAGM, NO-DRIP alt 241371
242242	1	O-RING F.AIR HOSE FITTING
242258	1	TRIM 3X10 SELF ADHESIVE 0012"
242284	1	HEAD GASKET F. COMPRESSOR
242285	1	DIAPHRAGM F. F/M COMP.
261455	1	BRUSH KIT-FOAM MARKER MOTOR
261562	1	RUBBER DAMPER 2XM6X25
283697	1	TIESTRAP 200MM
284564	1	PLATE F.COMPRESSOR HEAD
284565	1	PLATE F.COMPRESSOR HEAD
284643	1	COMPRESSOR HEAD F.FOAM MARKER
284665	1	CONNECTING ROD F.COMPRESSOR
284980	1	FLANGE REAR F. F.M.COMPRESSOR
320445	1	FITT.DK HN 1/4"X3/8" BSP
321462	1	CAP F.NO-DRIP ASSY.
322261	1	HOUSING F.SAFETY VALVE 3/8"
440650	1	SCREW 3.5x13 STAINLESS
460261	1	NUT HEX M6X1 LOCK A2 DIN985
729645	1	NON-DRIP SPRING ASSY.GREEN 10
927264	1	HOSE R X PE D6/D4 X 0012"
927306	1	HOSE R X PE D8/D6 X 0012"BLACK
927330	1	HOSE R X PE D10/D8 X 012"BLACK
10518703	1	SNAP-RING OUTER 8X1
21002103	1	BEARING, 6200 2ZJEM (SKF)
26001403	1	HC FOAM MARKR CONSOLE VS3.0.00
26001503	1	HC FOAM MARKER CONSOLE MT.KIT
26001803	1	POWER CABLE
26001903	1	15' 7-PIN EXTENSION CABLE
26004103	1	FOAM MARKER CNTRL MOD CABL STD
26008703	1	FOAM MARKER CONTROL SCII
26010403	1	TOGGLE SWITCH MICRO-TRAK F.M.
26023700	1	SOLENOID VAL 12V 1/8' FLO '07
28025503	1	PLUG F.DRILLED HOLE 1/2"
28025603	1	PLUG F.DRILLED HOLE 3/4"
39122000	1	DISTR.HOUSING F.FOAM MARKER'07
70019403	1	FOAM MARKER COMPRESSOR KIT STD

WWW.FOTRONIK.PL

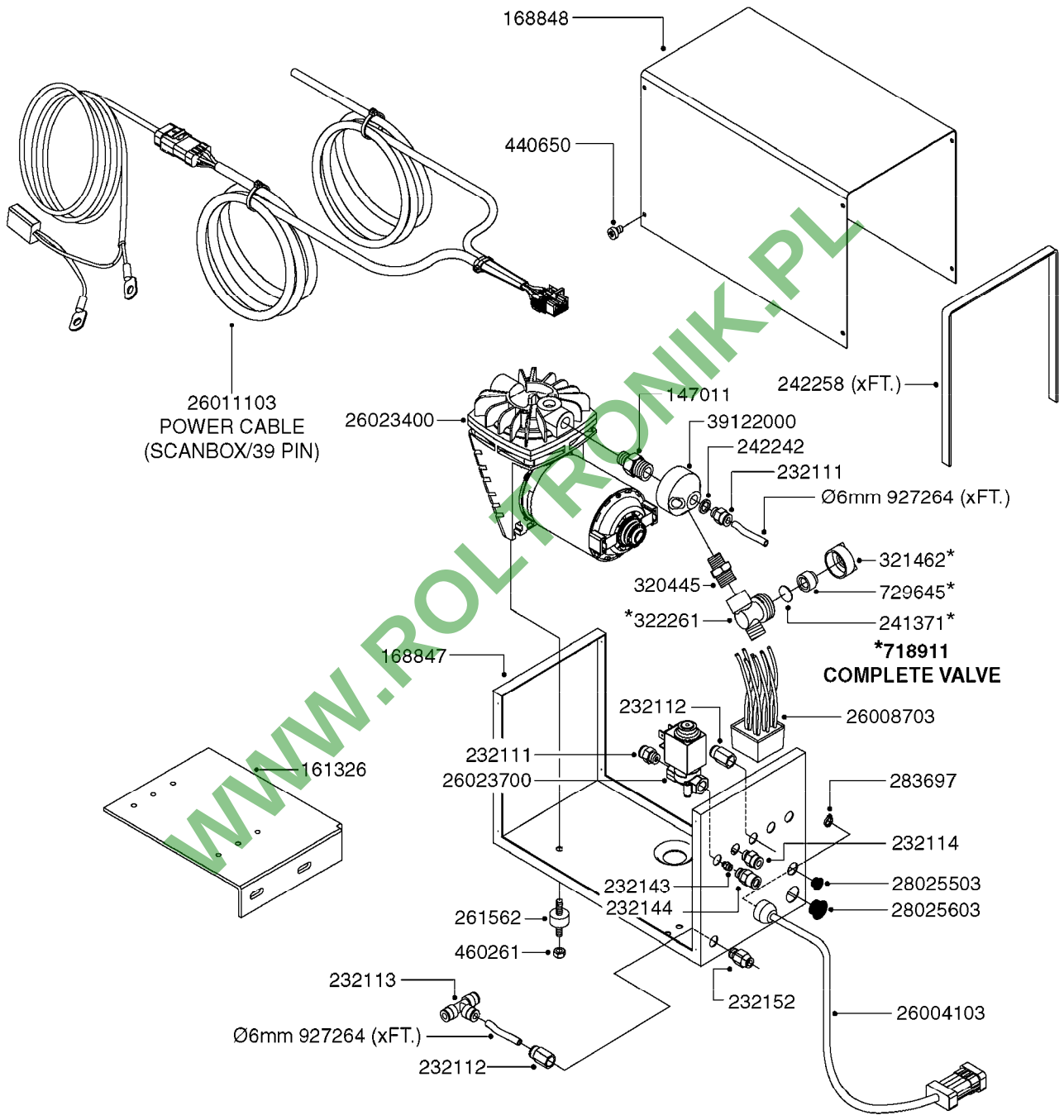

WWW.ROLTRONIK.PL

K0400

*Ø8mm 927306 (xFT.)
*Ø10mm 927330 (xFT.)

70062503 - COMPLETE ASSEMBLY

parts-nº	order qty	description
147011	1	HEX NIPPLE 3/8'X1/4'BSP BRASS
161326	1	MOUNT BKT. F. FOAM COMP.BOX 98
168847	1	ENCLOSURE LOWER F.MARKER
168848	1	COVER F. FOAM MARKER
232111	1	QUICK COUPLER 6MM X 1/8 EXT.
232112	1	QUICK COUPLER 6MM 1/8 INT.
232113	1	QUICK COUPLER 6MM T-PIECE
232114	1	COUPLER 1/8" THREADX8MM HOSE
232143	1	REDUCER 1/4'INT-1/8'EXT
232144	1	QUICK COUPLER 10MM X 1/4 EXT
232152	1	QUICK COUPLER 8MMX1/8 EXT.LONG
241371	1	DIAPHRAGM, NO-DRIP alt 241371
242242	1	O-RING F.AIR HOSE FITTING
242258	1	TRIM 3X10 SELF ADHESIVE 0012"
261562	1	RUBBER DAMPER 2XM6X25
283697	1	TIESTRAP 200MM
320445	1	FITT.DK HN 1/4"X3/8" BSP
321462	1	CAP F.NO-DRIP ASSY.
322261	1	HOUSING F.SAFETY VALVE 3/8"
440650	1	SCREW 3.5x13 STAINLESS
460261	1	NUT HEX M6X1 LOCK A2 DIN985
718911	1	VALVE (SAFETY) F.MARKER
729645	1	NON-DRIP SPRING ASSY.GREEN 10
927264	1	HOSE R X PE D6/D4 X 0012"
927306	1	HOSE R X PE D8/D6 X 0012"BLACK
927330	1	HOSE R X PE D10/D8 X 012"BLACK
26004103	1	FOAM MARKER CNTRL MOD CABL STD
26008703	1	FOAM MARKER CONTROL SCII
26011103	1	FOAMER POWER/CONTROL CABLE 39P
26023400	1	COMPRESSOR F.FOAM MARKER CM40
26023700	1	SOLENOID VAL 12V 1/8' FLO '07
28025503	1	PLUG F.DRILLED HOLE 1/2"
28025603	1	PLUG F.DRILLED HOLE 3/4"
39122000	1	DISTR.HOUSING F.FOAM MARKER'07
70062503	1	FOAM MARKER COMPRESSOR,STD,39P

WWW.FC-TRONIK.PL

HARDI	**Agroparts: www.HARDI-INTERNATIONAL.com**	
	FOAM MARKER MOUNT BRACKETS K0420-HIN, 01:01:16	Page 0 Date 16.03.2016 13:35

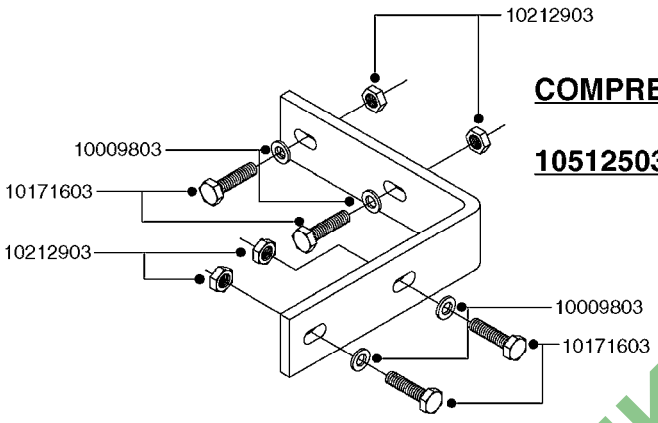

COMPRESSOR MOUNT-NAVIGATOR

10512503-COMPLETE ASSEMBLY

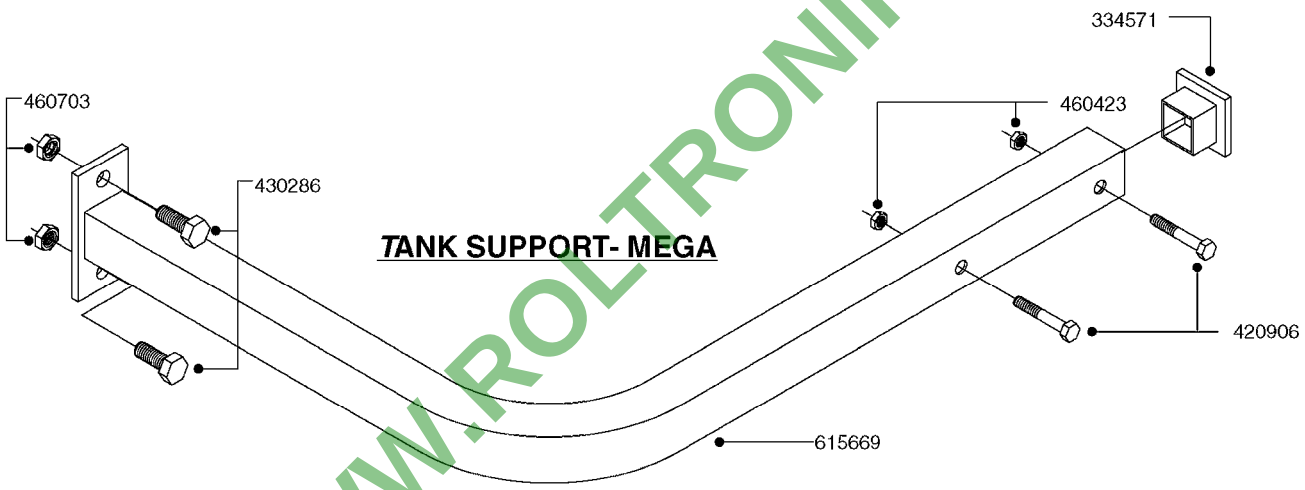

TANK SUPPORT- MEGA

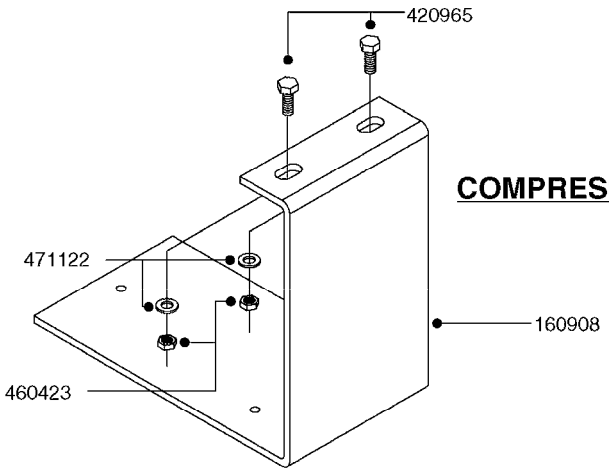

COMPRESSOR MOUNT- MEGA

K0420

WWW.ROLTRONIK.PL

FOAM MARKER MOUNT BRACKETS
K0420-HIN, 01:01:16

Date 16.03.2016 13:35

parts-n°	order qty	description
10009803	1	WASHER PLATE 3/8"
10171603	1	BOLT HEX 3/8 NC GR.2 01.50"
10212903	1	NUT HEX NC (NYLON LOCK) 3/8"
10512503	1	FOAM MARKER MOUNT KIT
160908	1	MOUNT BRACKET F. F.M.COMP.MEGA
334571	1	TAPON 40x40x2 EMBELLECEDOR
420906	1	BOLT HEX 8.8 DEL M10X60
420965	1	M10X40 MACHINE SCREW STAINLESS
430286	1	BOLT HEX 8.8 DEL M12X30 FT
460423	1	NUT HEX M10X1.5 LOCK
460703	1	NUT HEX M12X1.75 LOCK DIN985
471122	1	WASHER, M10, Ø20/10.5X 2.0, SS
615669	1	MT. BRACKET FOR F.M. TANK MEGA

WWW.ROLTRONIK.PL

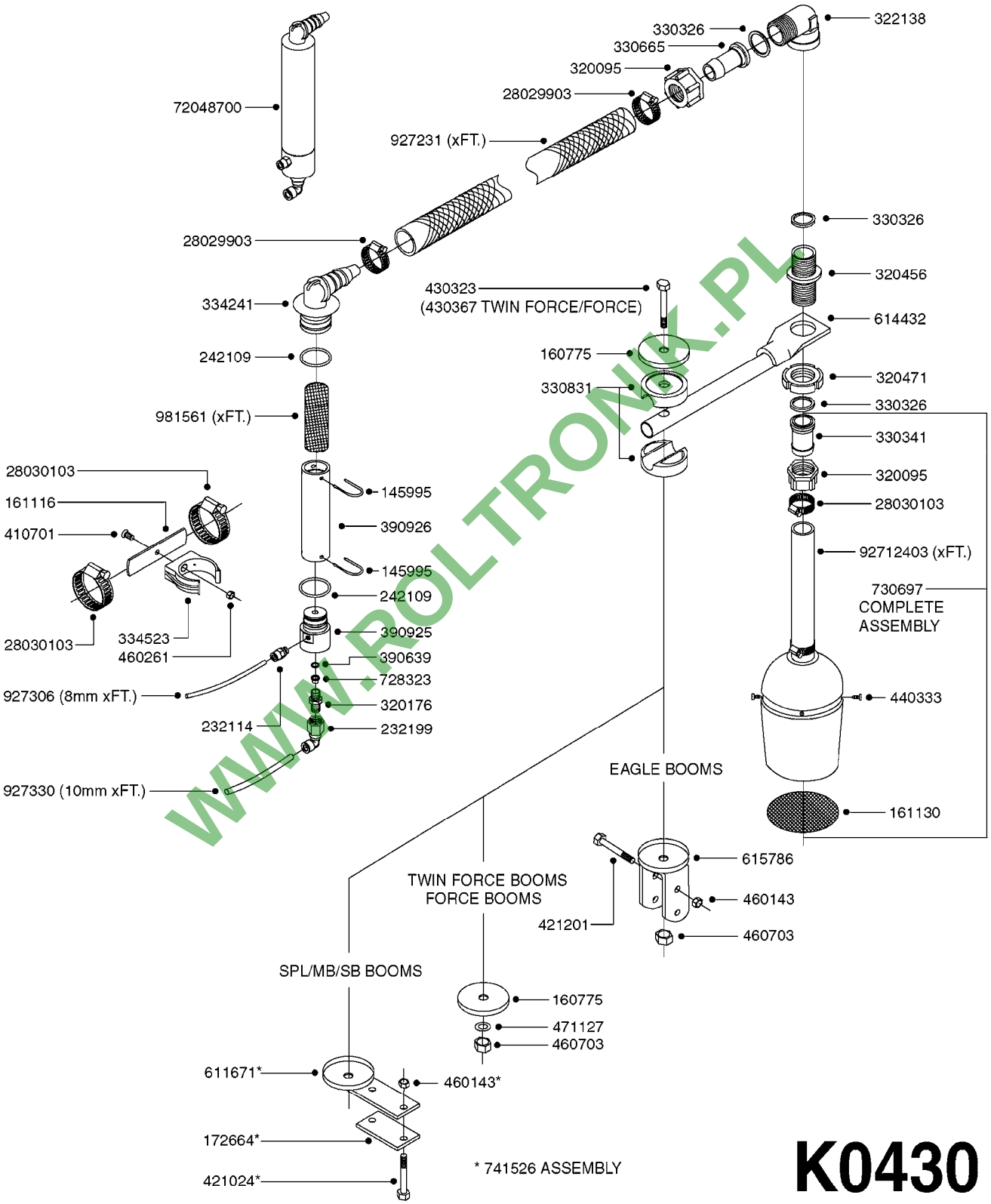

WWW.ROLTRONIK.PL

parts-nº	order qty	description
145995	1	FITT.DK S-53 FORK
160775	1	WASHER F. FRICTION PLATE
161116	1	FLATBAR PLATE 3 X 25 X 110
161130	1	FILTER SCREEN F/FOAM DROPPER
172664	1	FLATBAR BACKING PLATE
232114	1	COUPLER 1/8" THREADX8MM HOSE
232199	1	COUPLER 3/8' BSP-90/10MM HOSE
242109	1	O-RING D32.2x3.0 (USE 242354)
320095	1	FITT.DK NUT 1" BSP
320176	1	FITT.DK HN 3/8"X1/2" BSP
320456	1	FITT.DK BULKHEAD 1"BSP DOUBLE
320471	1	FITT.DK NUT 1" BSP JAMB
322138	1	FITT.DK ELB 1"M X 1"F BSP
330326	1	O-RING D30/D24X2 F.1"NUT
330341	1	FITT.DK HB 1" F. 1" NUT
330665	1	3/4' HOSE TAIL F/1' CAP
330831	1	FRICTION PLATE
334241	1	FITT.DK S-53 ELB.3/4"
334523	1	PIPE HOLDER D51.5
390639	1	O-RING F.NOZZLE FILTER
390925	1	FITTING F.FOAM MIX.CHAMB. STD
390926	1	TUBE,MIX CHAMB. FOAM MARK STD
410701	1	SCREW M6X16 GALV.
421024	1	BOLT HEX 8.8 DEL M8X60
421201	1	BOLT HEX 8.8 DEL M8X70
430323	1	BOLT HEX 8.8 DEL M12X60
430367	1	BOLT HEX 8.8 DEL M12X100 DIN931
440333	1	SCREW 3.5 X 9.5 SS
460143	1	NUT HEX M8 LOCK A2 DIN985
460261	1	NUT HEX M6X1 LOCK A2 DIN985
460703	1	NUT HEX M12X1.75 LOCK DIN985
471127	1	WASHER, M12, Ø24/13.0X 2.5, SS
611671	1	BREAK AWAY HOLDER F-MARKER
614432	1	BREAK AWAY ARM F. FOAM MARKER
615786	1	MOUNT BKT. F.FOAM DROPPER 98
728323	1	VALVE NON-RETURN
730697	1	FOAM DROPPER COMP. BLACK '97
741526	1	FOAM DROPPER MT. KIT MB-SPL
927231	1	HOSE R X PVCX3/4 CLR/BRD 0012"
927306	1	HOSE R X PE D8/D6 X 0012"BLACK
927330	1	HOSE R X PE D10/D8 X 012"BLACK
981561	1	SPONGE MAT. MIX.CHAMBER-x0012"
28029903	1	CLAMP HOSE GEAR P3/4"-S1" 6712
28030103	1	CLAMP HOSE GEAR P5/4-S1.5"6724
72048700	1	MIXING CHAMBER,FOAM MARK. STD
92712403	1	HOSE R X1" X300PSI WP X0012"

WWW.BOLTRONIK.PL

HARDI	**Agroparts: www.HARDI-INTERNATIONAL.com**	
	HANDGUN TYPE 60S/60L POST 95 K0480-HIN, 01:01:16	Page 0 Date 16.03.2016 13:35

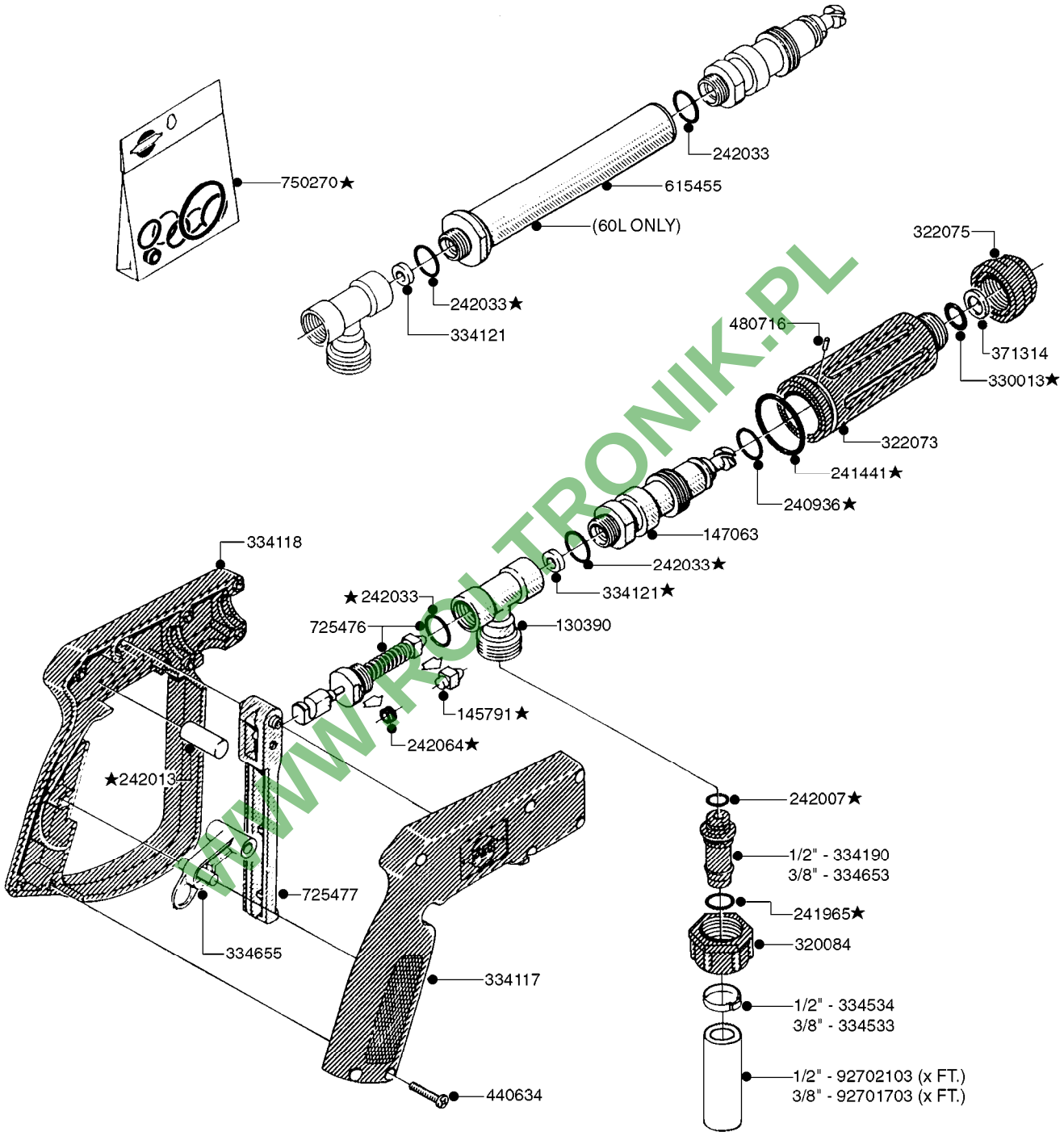

WWW.ROLTRONIK.PL

COMPLETE ASSEMBLY:
843197 - 60L
843196 - 60S

COMPLETE ASSEMBLIES
WHOLEGOODS ITEMS

K0480

parts-n°	order qty	description
130390	1	TEE 3/8'X 1/2' BSP F.TYPE 60S
145791	1	CONE FOR ON/OFF
147063	1	SWIRL F.SPRAY GUN TYPE 60
240936	1	O-RING D13.3X2.4 NITRIL
241441	1	O-RING D29.3X3
241965	1	O-RING 12.1 X 1.6
242007	1	O-RING D9.1X1.6
242013	1	SPRING RUBBER F/TRIGGER
242033	1	O-RING
242064	1	SLEEVE RUBBER 3X8X4MM
320084	1	FITT.DK NUT 1/2" BSP
322073	1	HOUSING F.SWIRL TYPE 60S H.G.
322075	1	HOUSING F. NOZZLE
330013	1	O-RING D15/D10X2.5 F.3/8"NUT
334117	1	HANDLE PIECE RIGHT F.60S/60L
334118	1	HANDLE PIECE LEFT F.60S/60L
334121	1	SEAT FOR ON-OFF TYPE
334190	1	FITT.DK HB 1/2' F. PISTOL 60S
334533	1	CLAMP HOSE PLASTIC 3/8"
334534	1	CLAMP HOSE PLASTIC 1/2"
334653	1	FITT.DK HB 3/8' F.HANDGUN
334655	1	TRIGGER SAFETY F.60S/60L GUN
371314	1	NOZZLE CERAMIC 1099-20
440634	1	SCREW 5/8"
480716	1	PIN D3X6 STAINLESS
615455	1	TUBE F.LANCE TYPE 60L
725476	1	SPINDLE
725477	1	TRIGGER
750270	1	GASKET KIT F.SPRAY GUN
843196	1	GUN, MODEL 60S
843197	1	HANDGUN KIT TYPE 60 LONG
92701703	1	HOSE R X3/8" X300PSI WP X0012"
92702103	1	HOSE R X1/2" X300PSI WP X0012"

WWW.POLTRONIK.PL

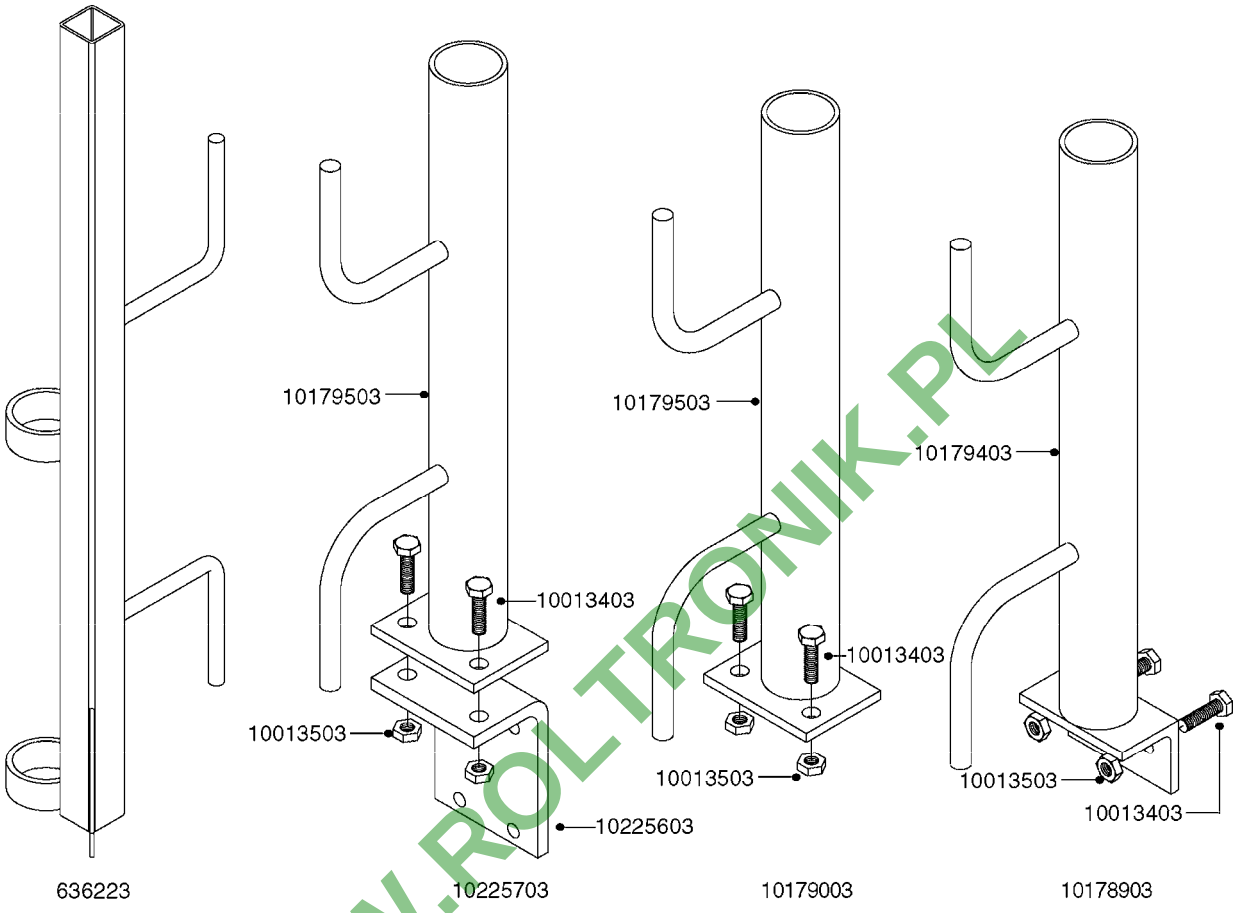

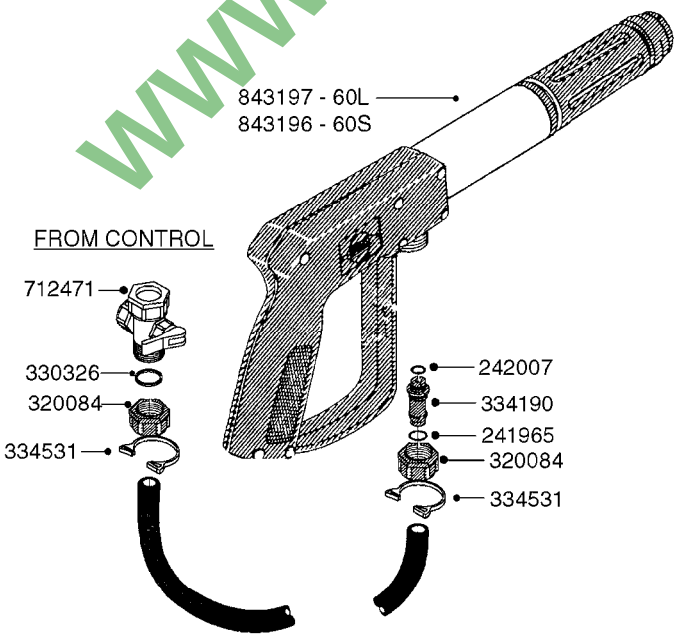

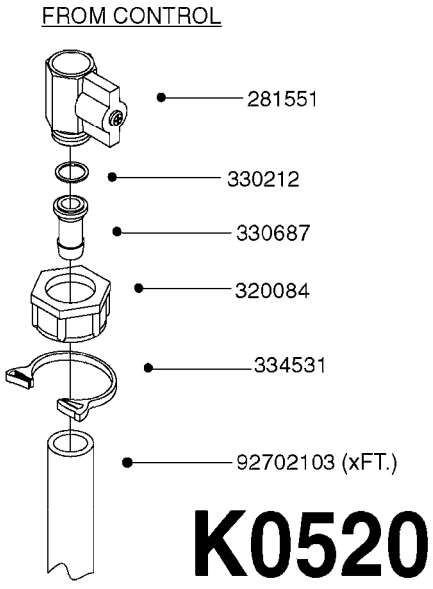

K0520

WWW.ROLTRONIK.PL

parts-n°	order qty	description
241965	1	O-RING 12.1 X 1.6
242007	1	O-RING D9.1X1.6
281551	1	BALL VALVE 1/2"
320084	1	FITT.DK NUT 1/2" BSP
330212	1	O-RING D19/D14X2.4 F.1/2"NUT
330326	1	O-RING D30/D24X2 F.1"NUT
330687	1	FITT.DK HB 1/2" F. 1/2" NUT
334190	1	FITT.DK HB 1/2' F. PISTOL 60S
334531	1	CLAMP HOSE PLASTIC 3/4"
636223	1	POST 12 VOLT TR30
712471	1	AGITATION VALVE ASSY. ON/OFF
843196	1	GUN, MODEL 60S
843197	1	HANDGUN KIT TYPE 60 LONG
10013403	1	BOLT HEX 3/8-16X1 1/4 HCS Z5
10013503	1	NUT HEX NC 3/8"
10178903	1	WRAP HOSE SIDE MOUNT PLATE
10179003	1	WRAP HOSE BOTTOM PLATE MOUNT
10179403	1	WRAP WELDMENT FOR HI101789
10179503	1	WRAP WELDMENT FOR HI101790
10225603	1	BKT.FOR HOSE WRAP MOUNT NL NK
10225703	1	WRAP HOSE BDL.BOTTOM PLATE
92702103	1	HOSE R X1/2" X300PSI WP X0012"

WWW.ROLTRONIK.PL

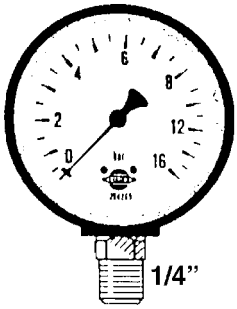

284269
0-8-16 bar
BRASS
2.5” GAUGE

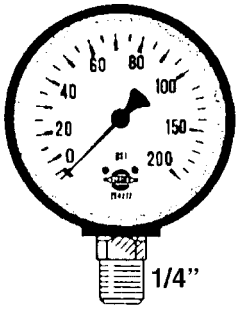

28026203
0-100-200 psi
STAINLESS
2.5” GAUGE

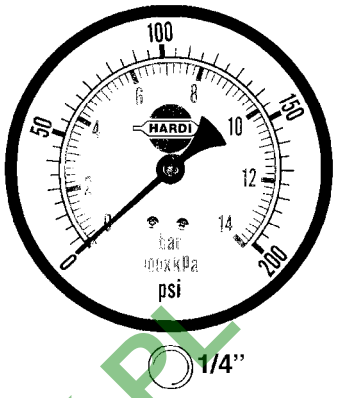

28014403
200 psi (14 bar)
STAINLESS
4” GAUGE

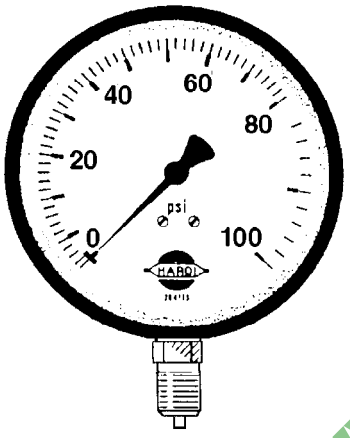

844086
100 bar (1400 psi)
BRASS
2.5” GAUGE

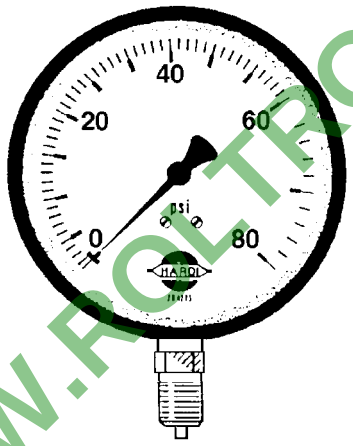

844088
80 bar (1200 psi)
STAINLESS
1.5” GAUGE

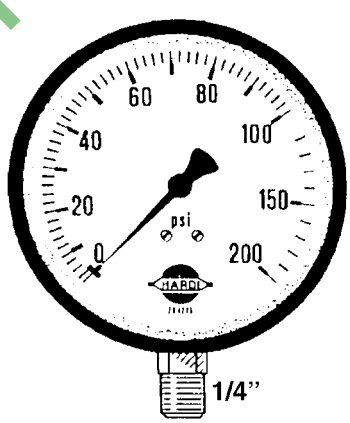

28026103
0-100-200 psi
STAINLESS
4” GAUGE

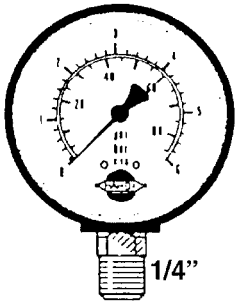

280637
6 bar (85 psi)
BRASS
2.5” GAUGE

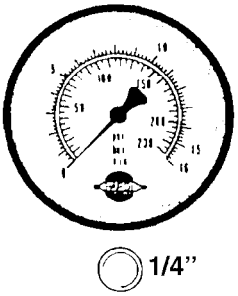

283754
16 bar (230 psi)
BRASS
2.5” GAUGE

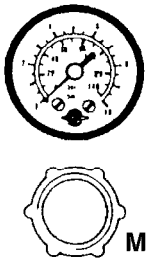

844082
10 bar (140 psi)
BRASS
1.5” GAUGE

K0560

WWW.ROLTRONIK.PL

PRESSURE GAUGES
K0560-HIN, 01:01:16

parts-n°	order qty	description
280637	1	GAUGE 2.5"BR BOTT.PSI85 BAR6
283754	1	GAUGE 2.5'BR REAR PSI200 BAR16
284269	1	GAUGE 2.5'BR BOTT.BAR16
844082	1	GAUGE 1.5'BR REAR PSI140BAR10
844086	1	GAUGE 2.5'BR BOTT.PSI1000BAR80
844088	1	GAUGE 2.5'BR BOTT PSI1200BAR80
28014403	1	GAUGE 4"BR REAR PSI200
28026103	1	GAUGE 200PSI/BR,4",1/4"BSP-BTM
28026203	1	GAUGE 200PSI/BR,2.5"1/4BSP-BTM

WWW.ROLTRONIK.PL

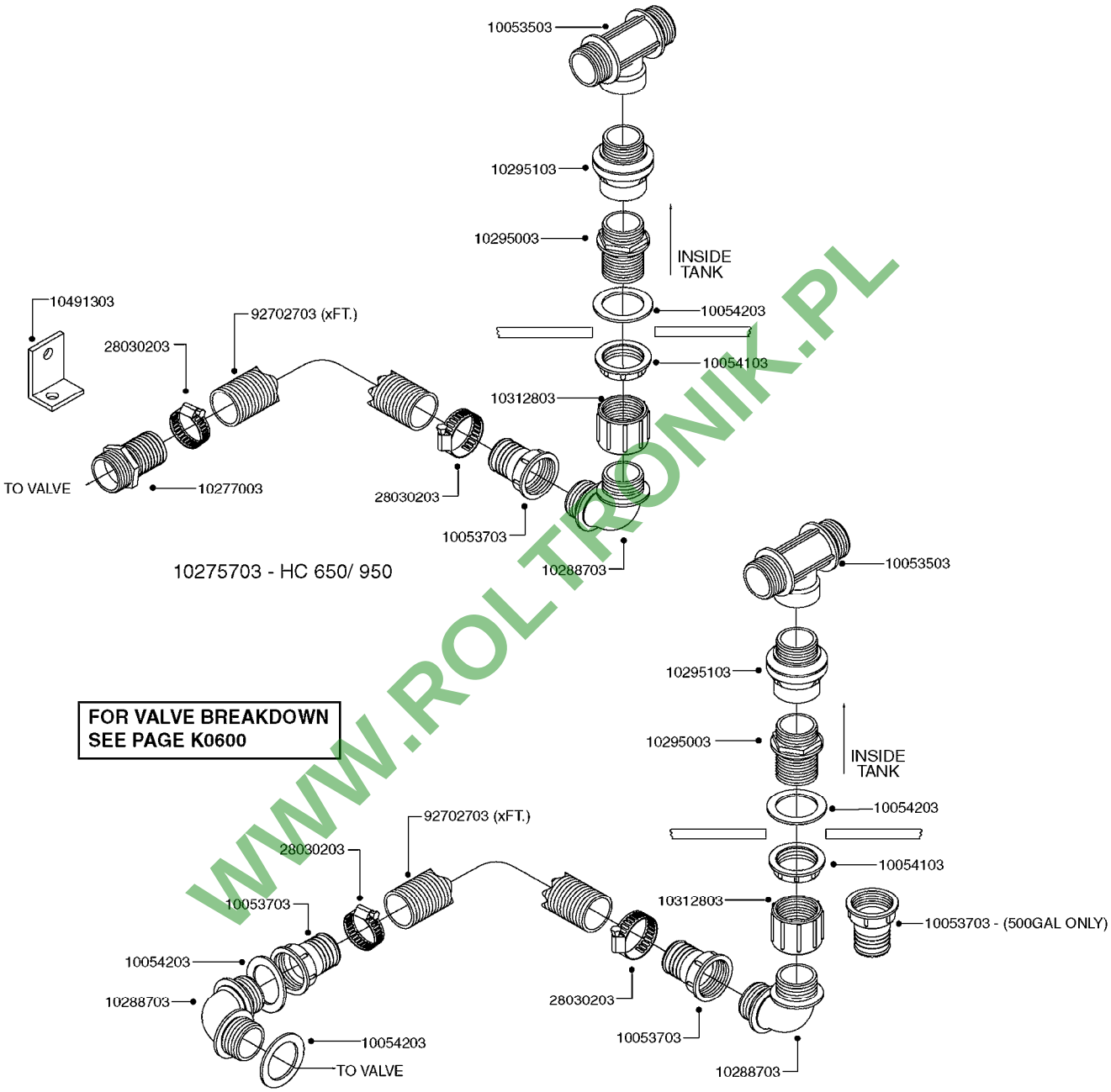

WWW.ROLTRONIK.PL

K0580

COMPLETE ASSEMBLIES
WHOLEGOODS ITEMS

QUICKFILL-PLMBNG SYS-TRLR SPYR
K0580-HIN, 01:01:16

Date 16.03.2016 13:35

parts-n°	order qty	description
10053503	1	FITT.PO.TEE 2"MX2"FX2"M BSP
10053703	1	FITT.PO.HB STR. 2"BSP Æ4411
10054103	1	FITT.PO.NUT 2" BSP JAMB MCPHEE
10054203	1	GASKET F. 2" FITTINGS RUBBER
10275703	1	*QUICK FILL KIT 650/950M
10277003	1	FITT.PO.HB 2.00X2.00 MCPHEE
10288703	1	FITT.PO.EL 2MX2M 90 DEG MCPHEE
10295003	1	FITT.PO.HN 2' 250071
10295103	1	FOOT VALVE 2" 504019
10312803	1	FITT.PO.BU 2' X 2'
10491303	1	ANGLE FOR HC950 QUICK FILL
10512303	1	QUICK FILL KIT NAV.(DON'T ORD)
28030203	1	CLAMP HOSE T-BOLT S2" 235-67
92702703	1	HOSE PVC SUCT GRAY 2"

WWW.ROLTRONIK.PL

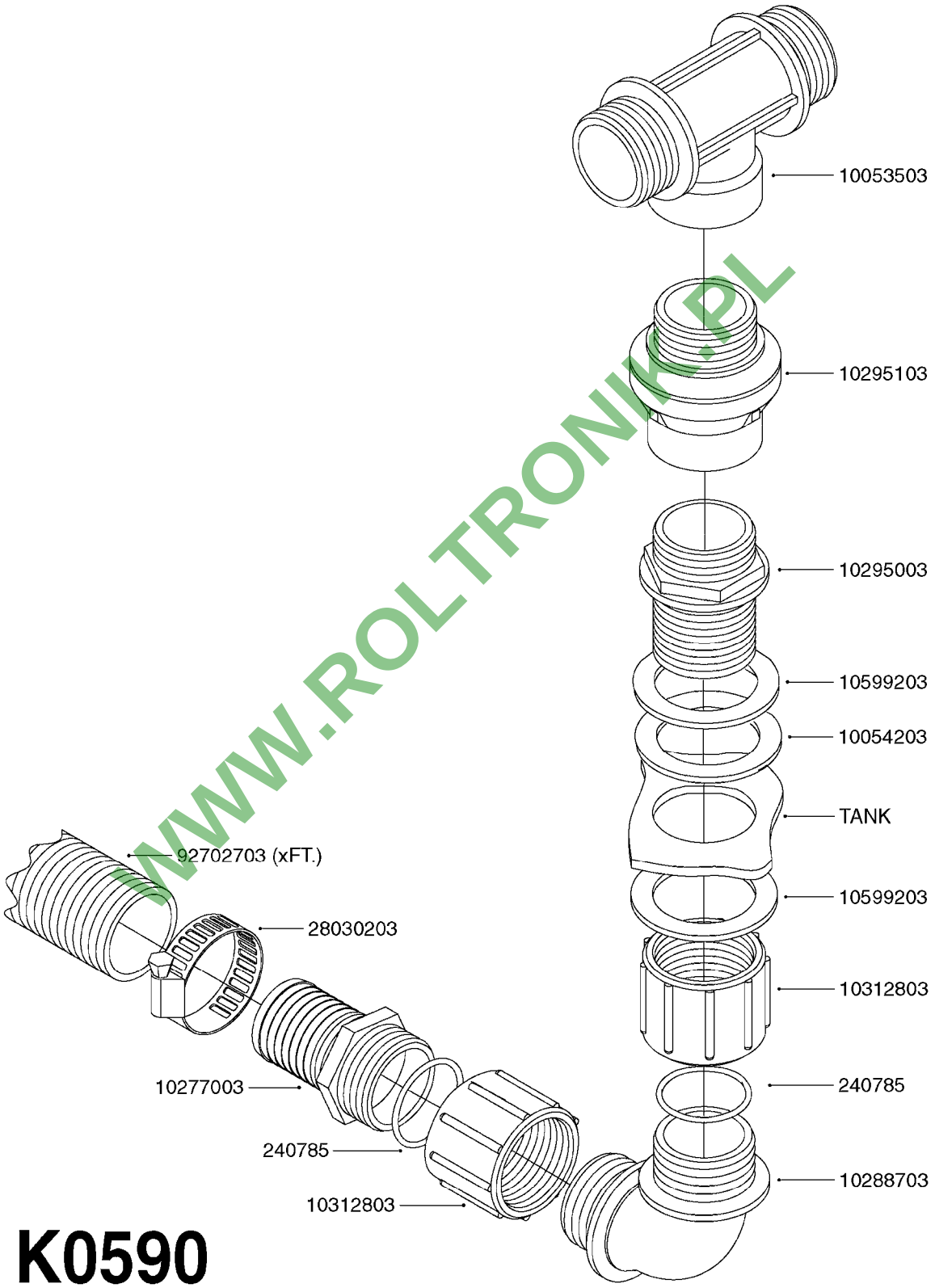

WWW.ROLTRONIK.PL

K0590

parts-n°	order qty	description
240785	1	O-RING D46,99X5,33 NITRIL
10053503	1	FITT.PO.TEE 2"MX2"FX2"M BSP
10054203	1	GASKET F. 2" FITTINGS RUBBER
10277003	1	FITT.PO.HB 2.00X2.00 MCPHEE
10288703	1	FITT.PO.EL 2MX2M 90 DEG MCPHEE
10295003	1	FITT.PO.HN 2' 250071
10295103	1	FOOT VALVE 2" 504019
10312803	1	FITT.PO.BU 2' X 2'
10599203	1	WASHER-390664 MACHINE ID2-3/8'
28030203	1	CLAMP HOSE T-BOLT S2" 235-67
92702703	1	HOSE PVC SUCT GRAY 2"

WWW.ROLTRONIK.PL

HARDI	**Agroparts: www.HARDI-INTERNATIONAL.com**	
	REMOTE GAUGE-BK 180 & EC K0670-HIN, 01:01:16	Page 0 Date 16.03.2016 13:35

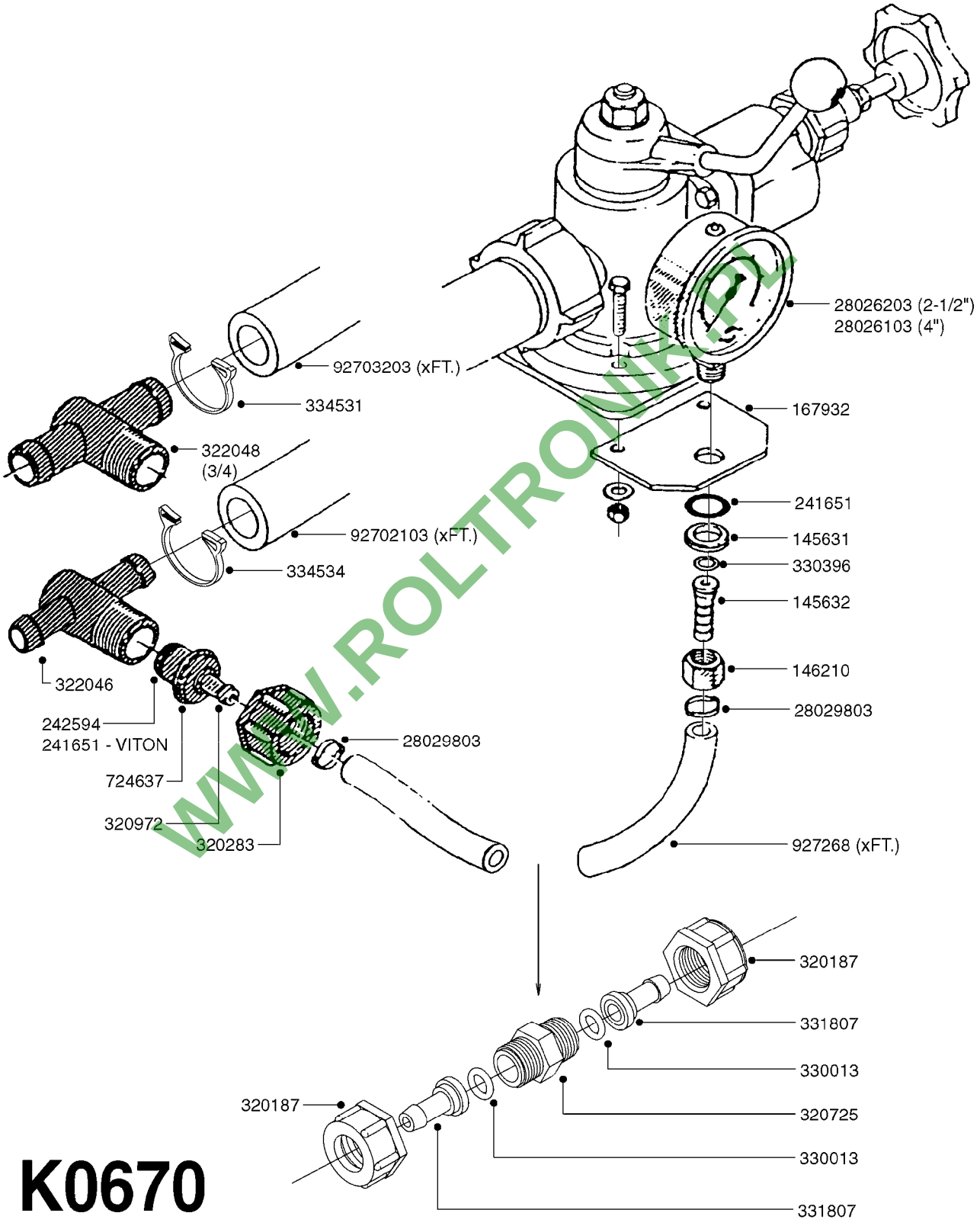

WWW.ROLTRONIK.PL

K0670

REMOTE GAUGE-BK 180 & EC
K0670-HIN, 01:01:16

parts-n°	order qty	description
145631	1	WASHER D21.5/D13.5X2.5 BRASS
145632	1	FITT.DK HB 1/4' BRASS F.GUAGE
146210	1	NUT 1/4'BSP BRASS
167932	1	MTG. BRACKET (PRESSURE GAUGE)
241651	1	O-RING D14.0X3.0 NITRIL
242594	1	O-RING D14 X 1.78 SCH.70-EPDM
320187	1	FITT.DK CAP 3/8" BSP BLACK
320283	1	FITT.DK NUT 3/4"BSP
320725	1	FITT.DK NIPPLE 3/8"-3/8" BSP
320972	1	FITT.DK HB 5/16'- 1/4' BSP
322046	1	FITT.DK TEE 1/2X1/2HB X3/4'BSP
322048	1	FITT.DK TEE 3/4X3/4HB X3/4'BSP
330013	1	O-RING D15/D10X2.5 F.3/8"NUT
330396	1	O-RING D11.2/D6.6X3.2
331807	1	FITT.DK HB 5/16" F.3/8" NUT
334531	1	CLAMP HOSE PLASTIC 3/4"
334534	1	CLAMP HOSE PLASTIC 1/2"
724637	1	FITT.DK HB 5/16' F. 3/4" COMP.
927268	1	HOSE R X PVC X 1/4 X 0012"
28026103	1	GAUGE 200PSI/BR,4",1/4"BSP-BTM
28026203	1	GAUGE 200PSI/BR,2.5"1/4BSP-BTM
28029803	1	CLAMP HOSE GEAR P1/2" 6708
92702103	1	HOSE R X1/2" X300PSI WP X0012"
92703203	1	HOSE R X3/4" X300PSI WP X0012"

WWW.ROLTRONIK.PL

HARDI	**Agroparts: www.HARDI-INTERNATIONAL.com**	
	REMOTE GAUGE-ESC SPRAYERS-4" K0680-HIN, 01:01:16	Page 0 Date 16.03.2016 13:35

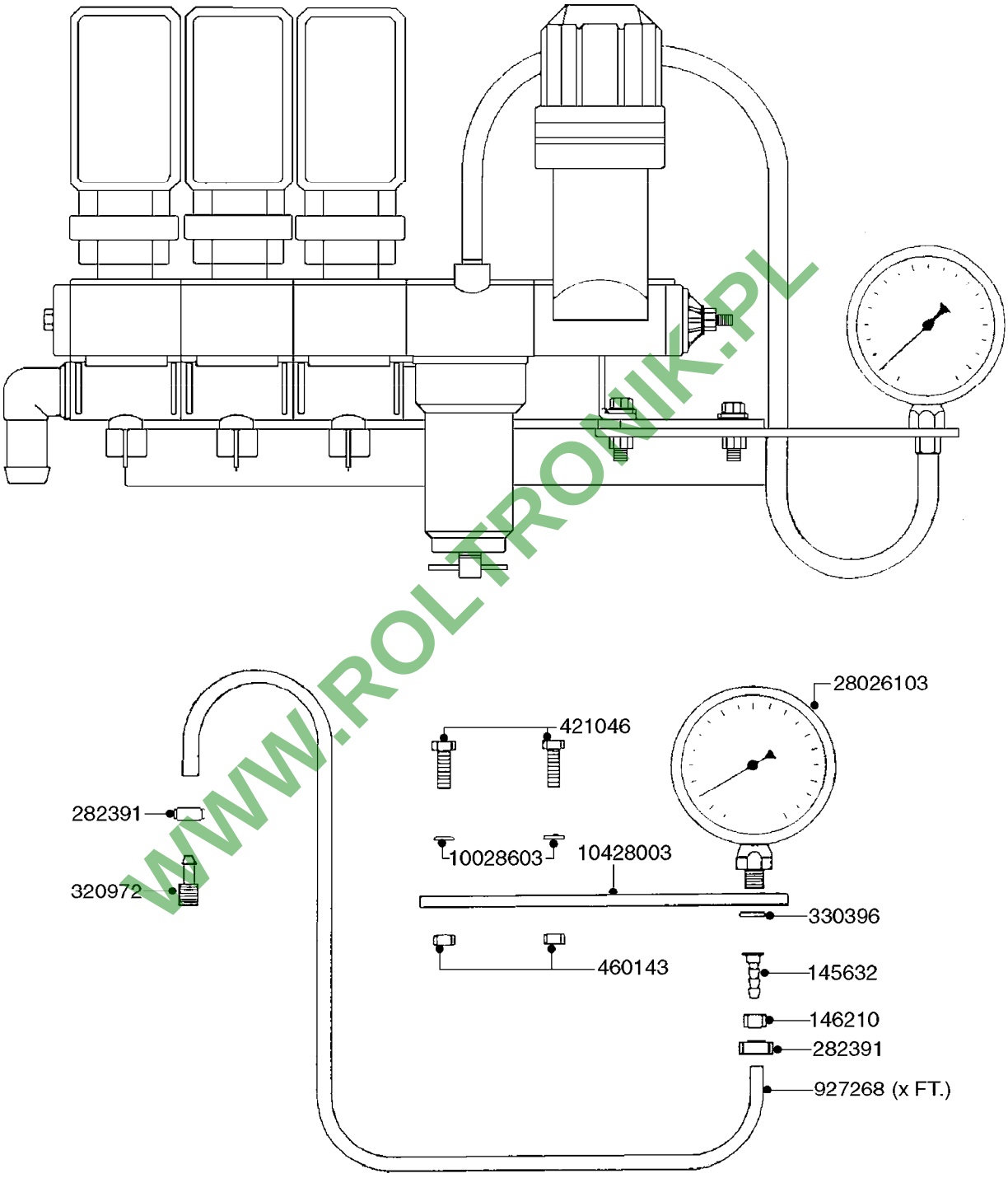

WWW.ROLTRONIK.PL

COMPLETE ASSEMBLIES
WHOLEGOODS ITEMS

70043903 - COMPLETE ASSEMBLY

K0680

parts-n°	order qty	description
145632	1	FITT.DK HB 1/4' BRASS F.GUAGE
146210	1	NUT 1/4'BSP BRASS
282391	1	CLAMP HOSE CRIMP 5/16'
320972	1	FITT.DK HB 5/16'- 1/4' BSP
330396	1	O-RING D11.2/D6.6X3.2
421046	1	BOLT HEX 8.8 DEL M8X25 FT A2 DIN933
460143	1	NUT HEX M8 LOCK A2 DIN985
927268	1	HOSE R X PVC X 1/4 X 0012"
10028603	1	WASHER LOCK 5/16'
10428003	1	BKT. FOR ESC GAUGE KIT
28026103	1	GAUGE 200PSI/BR,4",1/4"BSP-BTM
70043903	1	*GAUGE KIT,4" OP UNIT INFEILD

WWW.ROLTRONIK.PL

HARDI	**Agroparts: www.HARDI-INTERNATIONAL.com**	
	REMOTE GAUGE-MAGNETIC BASE KIT K0690-HIN, 01:01:16	Page 0 Date 16.03.2016 13:35

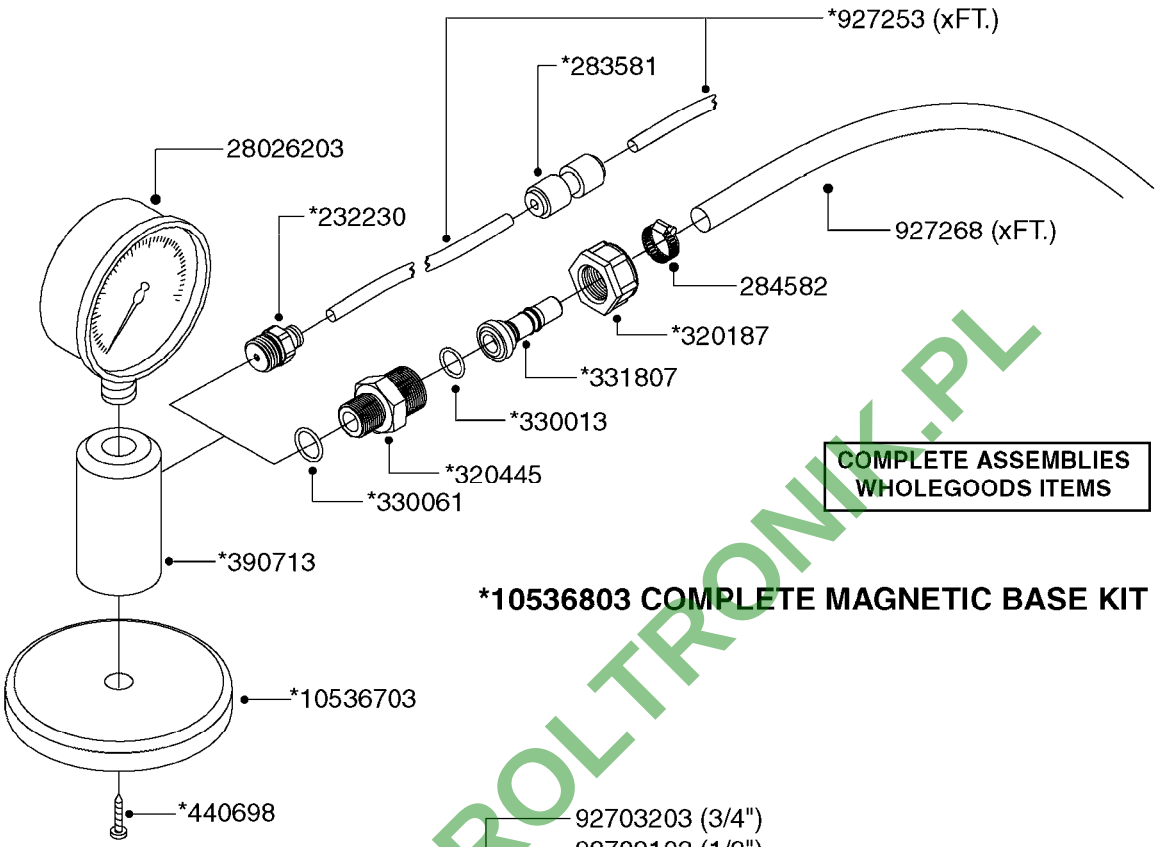

COMPLETE ASSEMBLIES
WHOLEGOODS ITEMS

***10536803 COMPLETE MAGNETIC BASE KIT**

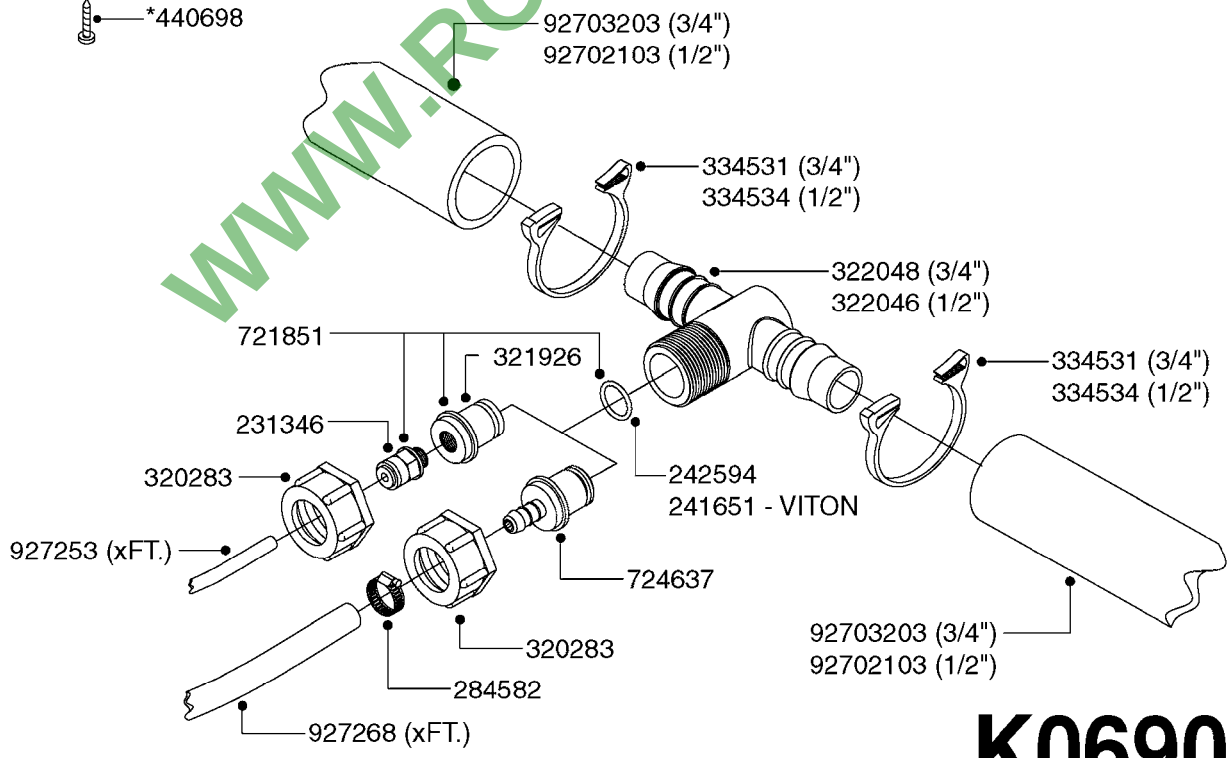

K0690

WWW.ROLTRONIK.PL

REMOTE GAUGE-MAGNETIC BASE KIT
K0690-HIN, 01:01:16

Date 16.03.2016 13:35

parts-n°	order qty	description
231346	1	QUICK COUPLER 1/8"BSP X 4 MM
232230	1	QUICK COUPLER 1/4"BSP X 4 MM
241651	1	O-RING D14.0X3.0 NITRIL
242594	1	O-RING D14 X 1.78 SCH.70-EPDM
283581	1	HOSE CONNECTOR STR. F.4MM PE
284582	1	CLAMP HOSE GEAR - 5/16"
320187	1	FITT.DK CAP 3/8" BSP BLACK
320283	1	FITT.DK NUT 3/4"BSP
320445	1	FITT.DK HN 1/4"X3/8" BSP
321926	1	FITT.DK REDUC 1/8"BSP F.3/4"N
322046	1	FITT.DK TEE 1/2X1/2HB X3/4'BSP
322048	1	FITT.DK TEE 3/4X3/4HB X3/4'BSP
330013	1	O-RING D15/D10X2.5 F.3/8"NUT
330061	1	O-RING D16/D11X2,5
331807	1	FITT.DK HB 5/16" F.3/8" NUT
334531	1	CLAMP HOSE PLASTIC 3/4"
334534	1	CLAMP HOSE PLASTIC 1/2"
390713	1	GAUGE ADAPTOR 1/4" BSP
440698	1	SCREW F.PLASTIC 6X18 SS HEXHD
721851	1	SCREW PLUG W/QUICK FIT
724637	1	FITT.DK HB 5/16' F. 3/4" COMP.
927253	1	AIR HOSE, DIAMETER 4MM
927268	1	HOSE R X PVC X 1/4 X 0012"
10536703	1	MAGNETIC BASE D3,2'/90LB
10536803	1	MAGNETIC BASE KIT F.GAUGE
28026203	1	GAUGE 200PSI/BR,2.5"1/4BSP-BTM
92702103	1	HOSE R X1/2" X300PSI WP X0012"
92703203	1	HOSE R X3/4" X300PSI WP X0012"

WWW.ROLETRONIK.PL

HARDI	**Agroparts: www.HARDI-INTERNATIONAL.com**	
	REMOTE GAUGE - NAVIGATOR M K0700-HIN, 01:01:16	Page 0 Date 16.03.2016 13:35

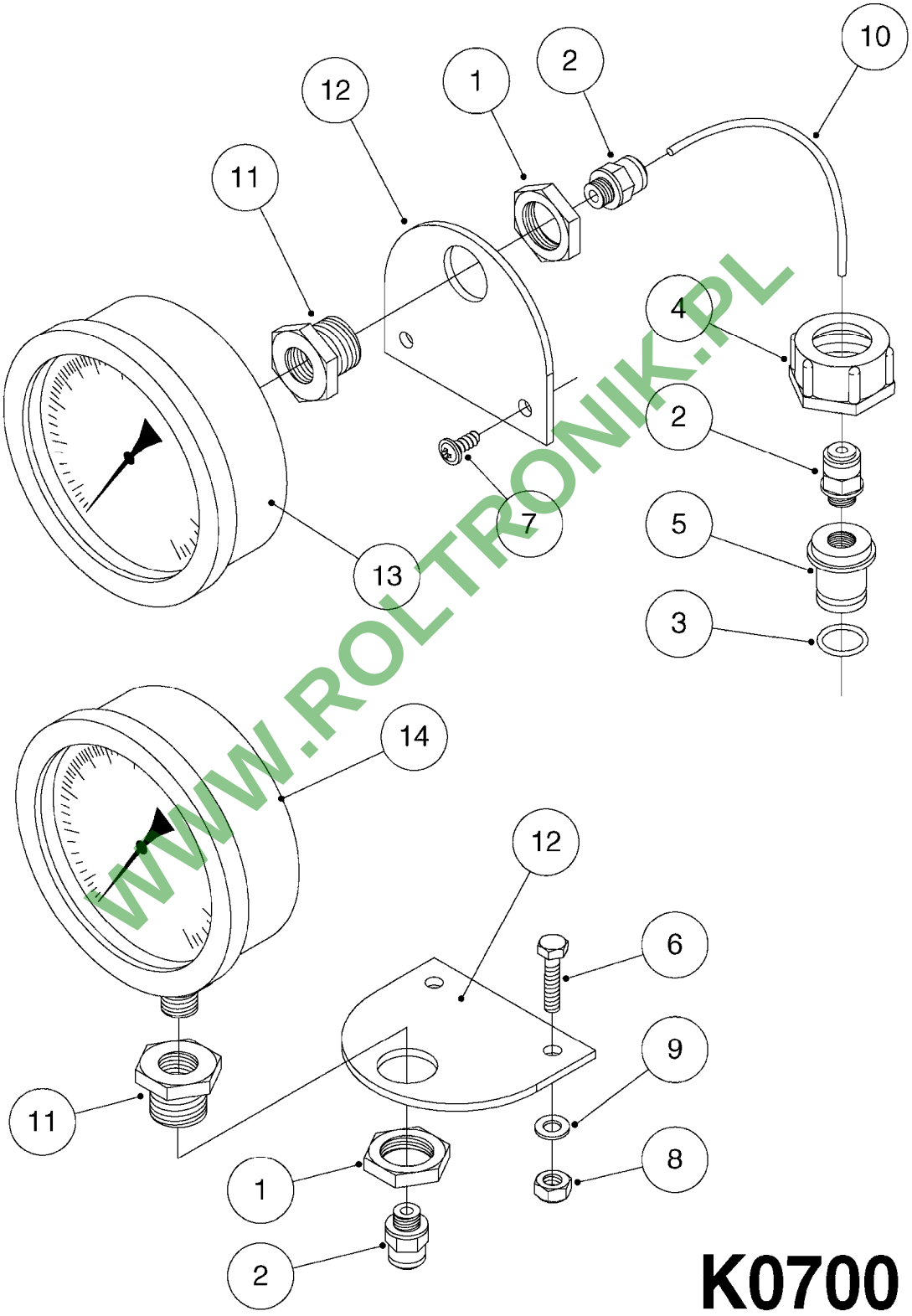

WWW.ROLTRONIK.PL

K0700

REMOTE GAUGE - NAVIGATOR M
K0700-HIN, 01:01:16

Date 16.03.2016 13:35

Pos.	parts-n°	order qty	description
1	140766	1	NUT 1/2" BSP
2	231346	1	QUICK COUPLER 1/8"BSP X 4 MM
3	242594	1	O-RING D14 X 1.78 SCH.70-EPDM
4	320283	1	FITT.DK NUT 3/4"BSP
5	321926	1	FITT.DK REDUC 1/8"BSP F.3/4"N
6	410281	1	BOLT HEX 8.8 DEL M6X25 DIN933 A2
7	440673	1	SCREW F.PLASTIC 5X12 SS
8	460261	1	NUT HEX M6X1 LOCK A2 DIN985
9	471125	1	WASHER, M6, Ø12/ 6.4X 1.6, SS
10	927253	1	AIR HOSE, DIAMETER 4MM
11	14055400	1	FITT.DK REDUC 1/2"x1/8"x1/4"BS
12	16012203	1	MOUNT PLATE F.PRESS. GAUGE D20
13	28014403	1	GAUGE 4"BR REAR PSI200
14	28026103	1	GAUGE 200PSI/BR,4",1/4"BSP-BTM
14	28026203	1	GAUGE 200PSI/BR,2.5"1/4BSP-BTM

WWW.ROLTRONIK.PL

RINSE SYSTEM NOZZLES
K0730-HIN, 01:01:16

Page 0

Date 16.03.2016 13:35

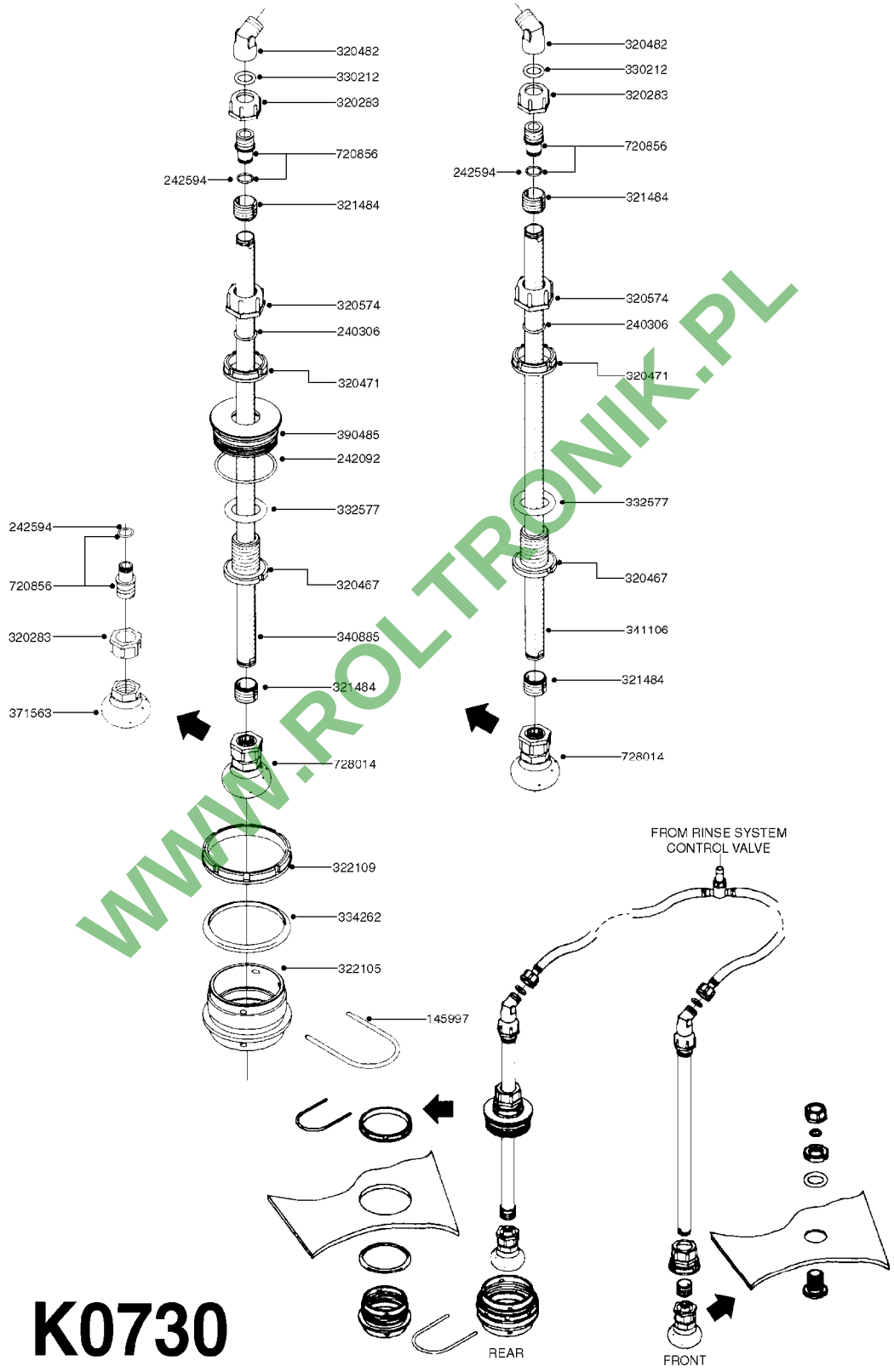

K0730

WWW.ROLTRONIK.PL

RINSE SYSTEM NOZZLES
K0730-HIN, 01:01:16

Date 16.03.2016 13:35

parts-n°	order qty	description
145997	1	FITT.DK S-93 FORK
240306	1	O-RING D29/D21X4
242092	1	O-RING D69.5X3 (Use-242351)
242594	1	O-RING D14 X 1.78 SCH.70-EPDM
320283	1	FITT.DK NUT 3/4"BSP
320467	1	FITT.DK BULKHEAD 1"BSP SINGLE
320471	1	FITT.DK NUT 1" BSP JAMB
320482	1	FITT.DK ELB. 1/2" BSP 60 DEG.
320574	1	FITT.DK NUT 1" BSP SPECIAL
321484	1	BUSHING THREADED F.NOZZ.TUBE
322105	1	FITT.DK S-93 BULKHEAD DOUBLE
322109	1	FITT.DK S-93 BULKHEAD NUT
330212	1	O-RING D19/D14X2.4 F.1/2"NUT
332577	1	O-RING D38/D30X4 F.1" PUR.
334262	1	GASKET F.S-93 BULKHEAD
340885	1	TUBE F. RINSE NOZZLE L=600
341106	1	TUBE F.RINSE NOZZLE L=220
371563	1	NOZZLE FOR TANK RINSE
390485	1	FITT.DK S-93 PLUG W D34 HOLE
720856	1	FITT.DK 1/2'BSP ASSY.F.3/4'NUT
728014	1	RINSE NOZZLE MOUNTED

WWW.ROLTRONIK.PL

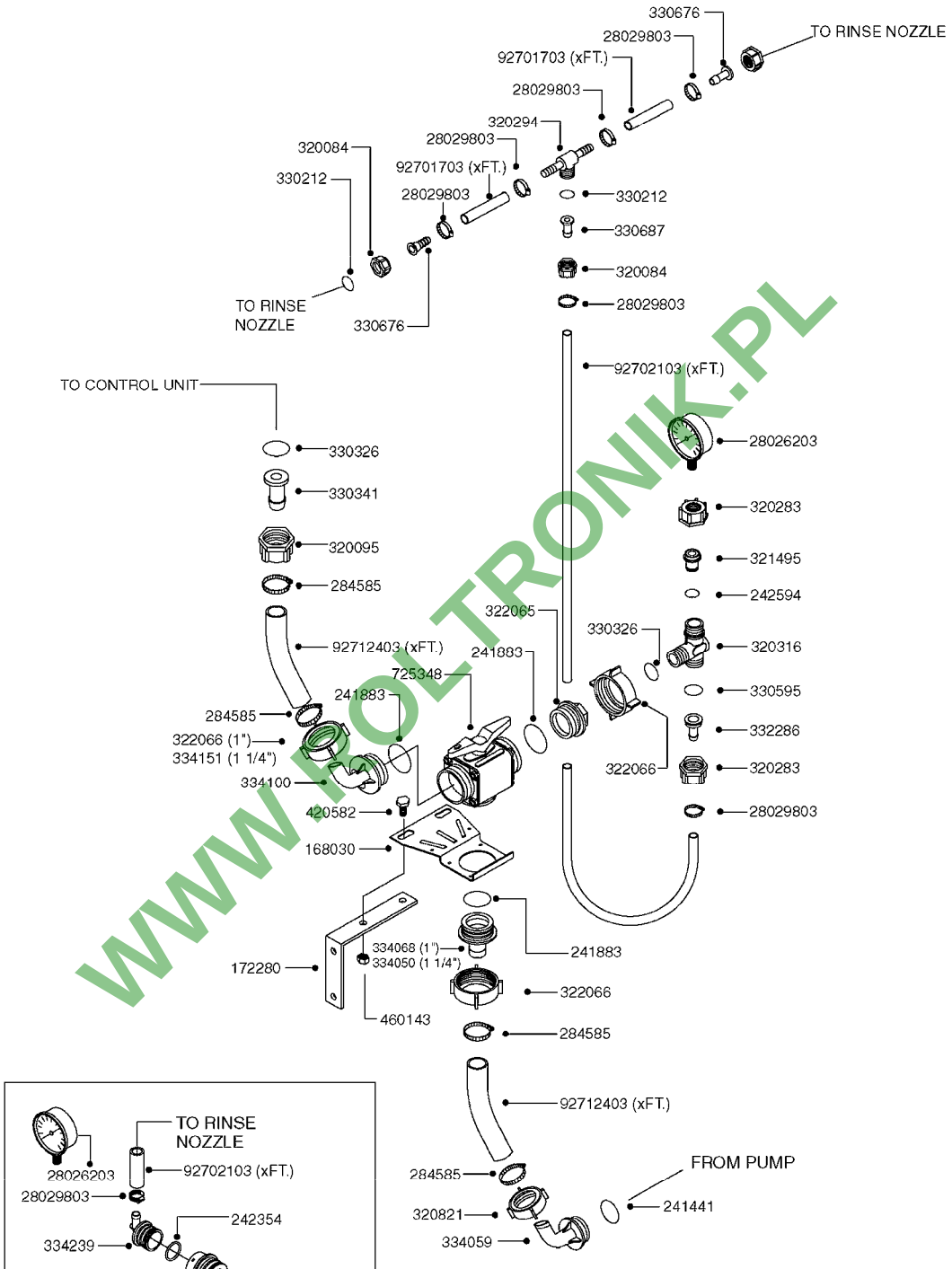

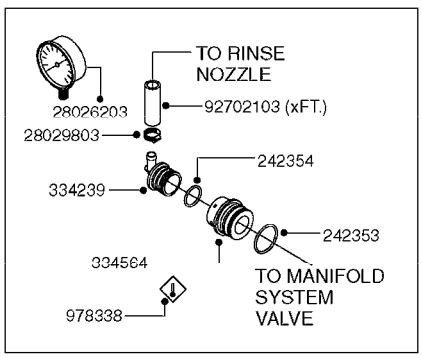

RINSE SYSTEM- MANIFOLD SYSTEM

K0750

WWW.POLTRONIK.PL

parts-n°	order qty	description
168030	1	BRACKET F/3 WAY VALVE
172280	1	FLATBAR 30X5 L=270 4XD9 90DEG.
241441	1	O-RING D29.3X3
241883	1	O-RING D39.2X3 NITRIL 242020
242353	1	O-RING D44.2X3.0 VITON F.S-67
242354	1	O-RING D32.2X3.0 VITON F.S-53
242594	1	O-RING D14 X 1.78 SCH.70-EPDM
284585	1	CLAMP HOSE GEAR 1" MINI 020
320084	1	FITT.DK NUT 1/2" BSP
320095	1	FITT.DK NUT 1" BSP
320283	1	FITT.DK NUT 3/4"BSP
320294	1	FITT.DK TEE 3/8X3/8HB X1/2"BSP
320316	1	FITT.DK TEE 3/4" X3/4" X1"BSP
320821	1	FITT.DK NUT 1-1/2" BSP
321495	1	FITT.DK REDUC 1/4'BSP F.3/4'NT
322065	1	FITT.DK UNION 1' BSP/S-56
322066	1	FITT.DK S-56 NUT
330212	1	O-RING D19/D14X2.4 F.1/2"NUT
330326	1	O-RING D30/D24X2 F.1"NUT
330341	1	FITT.DK HB 1" F. 1" NUT
330595	1	O-RING D24.6/D20X2.1 -3/4"
330676	1	FITT.DK HB 3/8" F. 1/2" NUT
330687	1	FITT.DK HB 1/2" F. 1/2" NUT
332286	1	FITT.DK HB 1/2" F. 3/4" NUT
334050	1	FITT.DK S-61 STR.1-1/4"
334059	1	FITT.DK EL 1" 110 DEG.F.1-1/2"
334068	1	FITT.DK S-61 STR.1"
334100	1	FITT.DK S-61 ELB.1" 110 DEG.
334151	1	FITT.DK S-61 ELB.1-1/4"110 DEG
334239	1	FITT.DK S-53 ELB.1/2"
334564	1	FITT.DK S-67 TO S-53 ADAPTER
420582	1	BOLT HEX 8.8 DEL M8X20 FT A2
460143	1	NUT HEX M8 LOCK A2 DIN985
725348	1	VALVE 3 WAY BLUE
978338	1	DECAL MANIFOLD SYS.RINSE NOZ
28026203	1	GAUGE 200PSI/BR,2.5"1/4BSP-BTM
28029803	1	CLAMP HOSE GEAR P1/2" 6708
92701703	1	HOSE R X3/8" X300PSI WP X0012"
92702103	1	HOSE R X1/2" X300PSI WP X0012"
92712403	1	HOSE R X1" X300PSI WP X0012"

WWW.POLTRONIK.PL

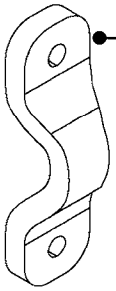

16023103: CM1500

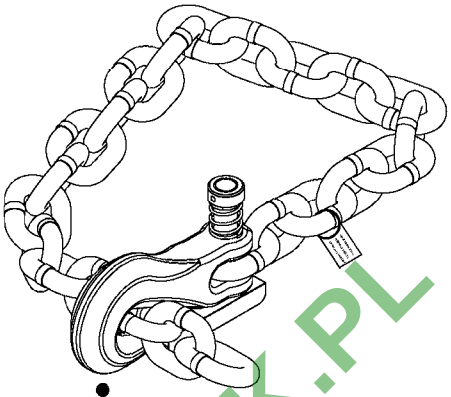

28017703: CM+1200/CM1500
29000403: CM+750/NAVM/NAV575/TR/PS/NS
28014703: NEW NAV1100

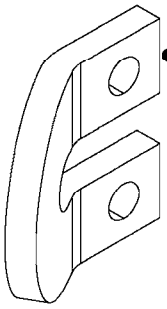

16056103: CM+1200

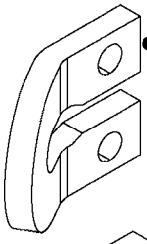

16056003: CM+750

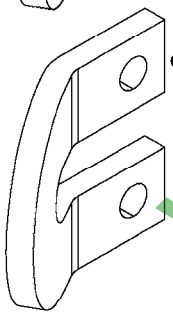

16020303: NEW NAV1100
NEW NAV575
TR/PS/NS

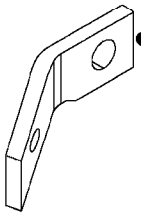

10275803: TR300/500

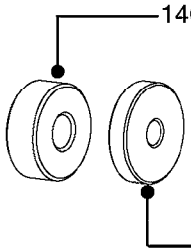

14001103: NAV550/800/1000

14001203: NAV550/800/1000

COMPLETE ASSEMBLIES:

70016803: CM1500
83312203: CM+1200
83312103: CM+750
83312003: NEW NAV1100
83311903: NEW NAV575
70012403:NAV550/800/1000
10276003: TR300/500

K0770

WWW.ROLTRONIK.PL

parts-n°	order qty	description
10275803	1	CHAIN BKT. FOR TR300/500/TX650
10276003	1	SAFETY CHAIN KIT TR300/500
14001103	1	MOUNTING HUB F. SAFETY CHAIN
14001203	1	MNT WASHER F. SAFE CHAIN KIT
16020303	1	SAFETY CHAIN MNT.BRKT.30,400LB
16023103	1	SAFETY CHAIN MNT.BRKT.40,500LB
16056003	1	SAFETY CHAIN MNT.BRKT.16100 lb
16056103	1	SAFETY CHAIN MNT.BRKT.40500 lb
28014703	1	SAFETY CHAIN 30,400LBS CERT.
28017703	1	SAFETY CHAIN 40,500LBS CERT.
29000403	1	SAFETY CHAIN CERT 16100LB
70012403	1	*SAFETY CHAIN KIT 16100LB NAV
70016803	1	SAFETY CHAIN KIT CM1500
83311903	1	SAFTY CHAIN KIT 575 NAV.
83312003	1	SAFETY CHAIN KIT 1100 NAV.
83312103	1	SAFETY CHAIN KIT CM+750
83312203	1	SAFETY CHAIN KIT CM+1200

WWW.ROLTRONIK.PL

HARDI	**Agroparts: www.HARDI-INTERNATIONAL.com**	
	SIGHT GAUGE - REMOTE K0780-HIN, 01:01:16	Page 0 Date 16.03.2016 13:35

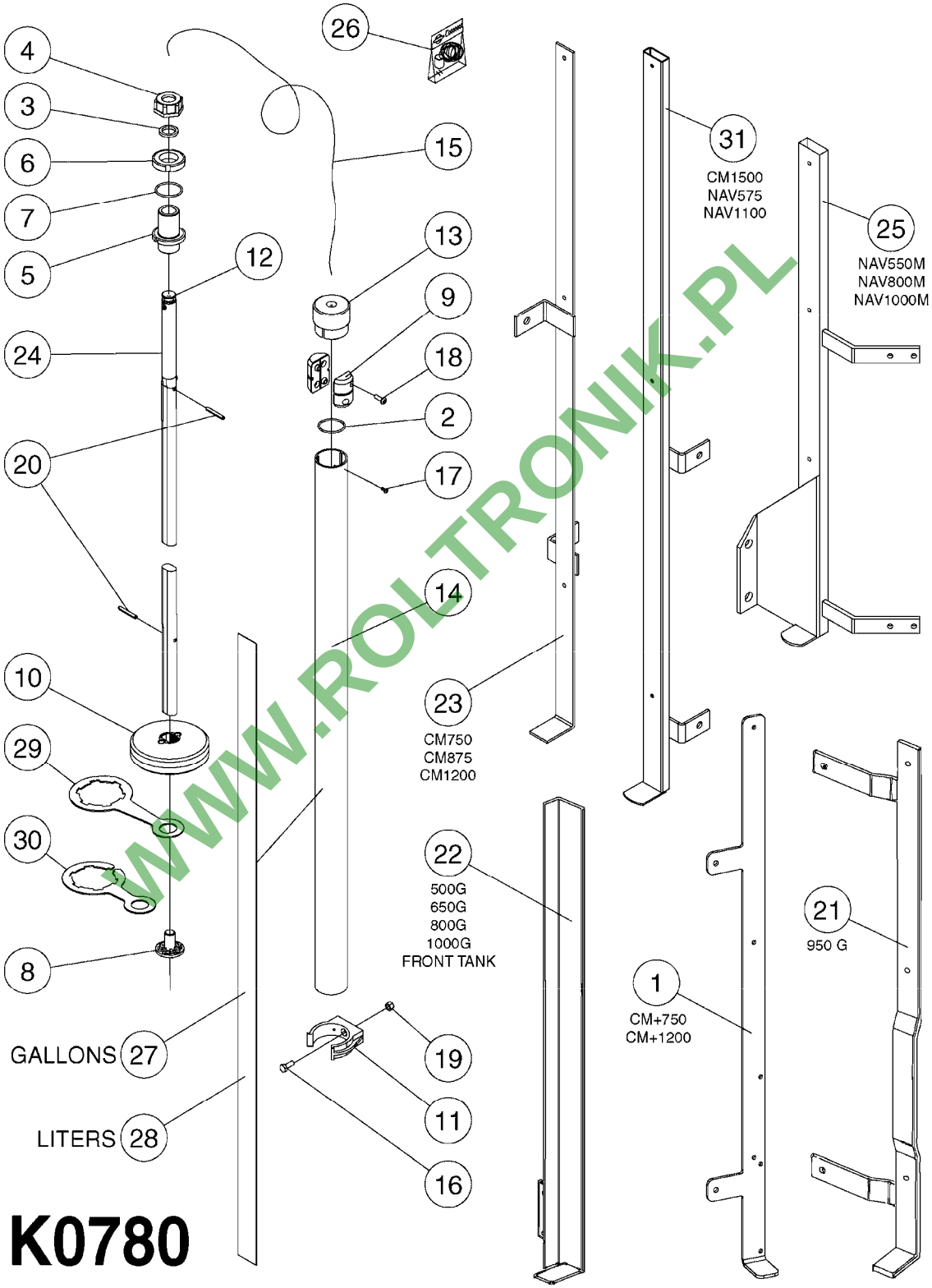

WWW.ROLTRONIK.PL

SIGHT GAUGE - REMOTE
K0780-HIN, 01:01:16

Pos.	parts-n°	order qty	description
1	161950	1	SIGHT GAUGE MT BKT CM+ 750/120
2	242262	1	O-RING D31X3 VITON
3	242309	1	SEAL Ø22 ID Ø30 OD X 4 HIGH
4	320095	1	FITT.DK NUT 1" BSP
5	320456	1	FITT.DK BULKHEAD 1"BSP DOUBLE
6	320471	1	FITT.DK NUT 1" BSP JAMB
7	332577	1	O-RING D38/D30X4 F.1" PUR.
8	333864	1	GUIDE F. SAFETY VALVE SPRING
9	334513	1	MARKER HALF SIGHT GAUGE
10	334515	1	FLOATER FOR LIQUID LEVEL
11	334523	1	PIPE HOLDER D51.5
12	334849	1	SIGHT GAUGE GUIDE F. SS TUBE
13	334850	1	GUIDE F. SIGHT GAUGE TUBE TOP
14	34000703	1	TUBE F. DRY GAUGE L=1200 BENT RANGER 2200
14	341202	1	TUBE F.SIGHT GAUGE L=40"
14	341204	1	SIGHT GAUGE TUBE L=59"
14	341273	1	TUBE F.SIGHT GAUGE L=65"
14	341283	1	TUBE F.SIGHT GAUGE L=72"
14	341307	1	TUBE F.SIGHT GAUGE L=75" NCM 4400
14	341339	1	TUBE F.SIGHT GAUGE L=82" NCM 6600
14	341340	1	TUBE F.SIGHT GAUGE L=94"(2382) NCM 9000
15	28034100	1	CABLE F.LIQUID LEVEL IND.L=5M
15	390487	1	CORD NYLON/SIGHT GAUGE 4500mm
16	410185	1	BOLT HEX 8.8 DEL M6X16 A2
16	410362	1	BOLT HEX 8.8 SS M6X20 FT
17	440663	1	SCREW 3/8" NR4 STAINLESS
18	440677	1	SCREW F. PLASTIC 5X20 SS
19	460261	1	NUT HEX M6X1 LOCK A2 DIN985
20	480717	1	PIN D5 X 40 STAINLESS
20	480730	1	PIN ROLL 5X30 STAINLESS STEEL
21	615197	1	BKT.SIGHT GAUGE HC950
22	615308	1	BRACKET FOR SIGHT TUBE
23	615941	1	SIGHT GAUGE MOUNT BRACKET CM
24	61022100	1	GUIDE TUBE F NP1100/CM1500
24	61022600	1	GUIDE TUBE F.FLOATER NAV 575G NAV 575 & RANGER 2200
24	61036700	1	GUIDE TUBE F.FLOAT NCM 4400 NCM 4400 & NAV 4000
24	61038600	1	GUIDE TUBE F.FLOAT NCM 9000
24	61038700	1	GUIDE TUBE F.FLOAT NCM 6600
24	615942	1	GUIDE TUBE F.FLOATER CM1200G
24	615943	1	GUIDE TUBE F.FLOATER CM875G
24	615944	1	GUIDE TUBE F.FLOTR 750G 1695mm
24	615945	1	GUIDE TUBE F.FLOATER NAV 3000 NAV 3000 & HC650
24	615947	1	GUIDE TUBE F.FLOATER TR 500G NAV 3000 & HC650
24	615948	1	GUIDE TUBE F.FLOATER MEGA 350G
24	615949	1	GUIDE TUBE F.FLOATER MEGA 230G
24	615951	1	GUIDE TUBE F.FLOATER NAV800G
24	615952	1	GUIDE TUBE F.FLOATER NAV1000G
24	615954	1	GUIDE TUBE F. FLOATER F.T.250G
24	615955	1	GUIDE TUBE F.FLOATER FT.350G
24	615957	1	GUIDE TUBE F.FLOATER NAV.550G
25	637998	1	MANIFOLD BKT. NAVIGATOR
26	741527	1	SIGHT GAUGE KIT SS WIRE '98
27	10637303	1	DECAL SCALE F.270G MISTBLOWER

WWW.PO-TRONIK.PL

Pos.	parts-n°	order qty	description
27	10637403	1	DECAL SCALE M/BLOWER 500 USGAL
27	97600003	1	DECAL S/G TUBE 500GAL-99
27	97602603	1	DECAL S/G TUBE CM 1500
27	97604803	1	DECAL SIGHT GAUGE 1100 NAV.
27	97604903	1	DECAL SIGHT GAUGE 575 NAV.
27	97608903	1	DECAL SIGHT GAUGE 550M NAV.
27	97609403	1	DECAL SIGHT GAUGE CM4400 GAL. NCM 4400 (1200 GAL.)
27	97609703	1	DECAL S/G RANGER 2200 (600 G) RANGER 2200 (600 GAL.)
27	97609803	1	DECAL SIGHT GAUGE CM6600 GAL. NCM 6600 (1850 GAL.)
27	97610003	1	DECAL SIGHT GAUGE NCM 9000 GAL NCM 9000 (2400 GAL.)
27	97610203	1	DECAL SIGHT GAUGE NAV 3000 GAL NAV 3000 (800 GAL.)
27	97610403	1	DECAL SIGHT GAUGE NAV 4000 GAL NAV 4000 (1200 GAL.)
27	97611503	1	DECAL SIGHT GAUGE NAV 3500 GAL NAV 3500 (1000 GAL.)
27	97613303	1	DECAL S/G RANGER 2000 (GALLON)
27	978056	1	DECAL S/G TUBE 500GAL-99
27	978324	1	DECAL SCALE HC650
27	978327	1	DECAL SCALE 500
27	978329	1	DECAL SCALE HC950
27	978387	1	DECAL SCALE NAV 800
27	978388	1	DECAL SCALE NAV 1000
27	978431	1	DECAL SCALE MEGA 230 G
27	978432	1	DECAL SCALE MEGA 350 G
27	978469	1	DECAL SCALE F.TANK 250G
27	978470	1	DECAL SCALE F.TANK 350G
27	978610	1	DECAL SCALE CM750 US GAL
27	978691	1	DECAL SCALE CM875
27	978692	1	DECAL SCALE CM1200
28	89109004	1	DECAL SIGHT GAUGE 9000 LITERS
28	97607203	1	DECAL S/G TUBE 4200L. NEW NAV
28	97609903	1	DECAL S/G RANGER 2200 LITERS
28	97610503	1	DECAL SIGHT GAUGE NAV 4000 LIT
28	97611403	1	DECAL SIGHT GAUGE NAV 3500 LIT
28	97613403	1	DECAL S/G RANGER 2000 (LITER)
28	97808000	1	DECAL SIGHT GAUGE CM4400 LITER
28	978127	1	DECAL SCALE NAV550M METRIC
28	978128	1	DECAL SCALE NAV800M METRIC
28	978129	1	DECAL SCALE NAV1000M METRIC
28	97813700	1	DECAL SIGHT GAUGE CM6600 LITER
28	97820900	1	DECAL SIGHT GAUGE NAV 3000 LTR
28	978291	1	DECAL SCALE HC950M METRIC
28	978313	1	DECAL SCALE HC650M METRIC
28	978589	1	DECAL SCALE CM 3200 LITERS
28	978590	1	DECAL SCALE CM 4200 LITERS
28	978690	1	DECAL SCALE CM750 METRIC
29	16025500	1	TANK SPACER SIGHT GAUGE
30	16135600	1	GUIDE FOR SIGHT GAUGE NAV/NCM
31	61005703	1	BRACKET WELD SIGHT GAUGE

WWW.ROLTRONIK.PL

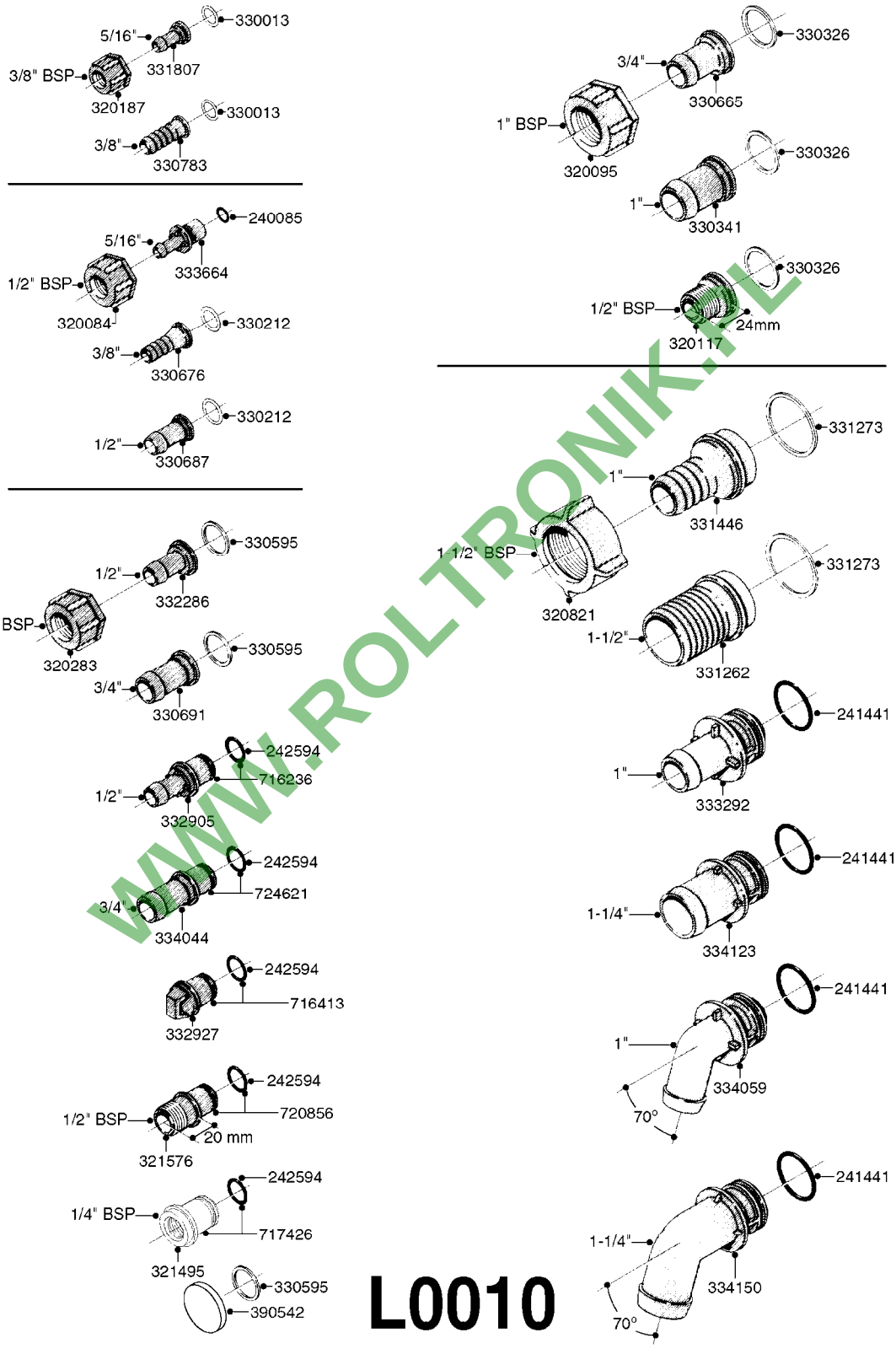

L0010

WWW.ROLTRONIK.PL

parts-n°	order qty	description
240085	1	O-RING D13,1/8,3X02,4 NITRIL
241441	1	O-RING D29.3X3
242594	1	O-RING D14 X 1.78 SCH.70-EPDM
320084	1	FITT.DK NUT 1/2" BSP
320095	1	FITT.DK NUT 1" BSP
320117	1	FITT.DK CONN.1/2"BSP F. 1" CAP
320187	1	FITT.DK CAP 3/8" BSP BLACK
320283	1	FITT.DK NUT 3/4"BSP
320821	1	FITT.DK NUT 1-1/2" BSP
321495	1	FITT.DK REDUC 1/4'BSP F.3/4'NT
321576	1	FITT.DK CONN 1/2"BSP F.3/4"NUT
330013	1	O-RING D15/D10X2.5 F.3/8"NUT
330212	1	O-RING D19/D14X2.4 F.1/2"NUT
330326	1	O-RING D30/D24X2 F.1"NUT
330341	1	FITT.DK HB 1" F. 1" NUT
330595	1	O-RING D24.6/D20X2.1 -3/4"
330665	1	3/4' HOSE TAIL F/1' CAP
330676	1	FITT.DK HB 3/8" F. 1/2" NUT
330687	1	FITT.DK HB 1/2" F. 1/2" NUT
330691	1	FITT.DK HB 3/4'F.3/4' NUT
330783	1	FITT.DK HB 3/8"F.3/8" NUT
331262	1	FITT.DK HB 1-1/2" F. 1-1/2"NUT
331273	1	O-RING D44/D38X2 F.1-1/2"
331446	1	FITT.DK HB 1" F.1-1/2" NUT
331807	1	FITT.DK HB 5/16" F.3/8" NUT
332286	1	FITT.DK HB 1/2" F. 3/4" NUT
332905	1	FITT.DK HB 1/2" F. 3/4" CAP
332927	1	PLUG F. NOZZLE TUBE 3/4'
333292	1	FITT.DK HB 1"O'RING F.1-1/2"
333664	1	FITT.DK HB 5/16' F. 1/2' NUT
334044	1	FITT.DK HB 3/4' F. 3/4' CAP
334059	1	FITT.DK EL 1" 110 DEG.F.1-1/2"
334123	1	FITT.DK HB 1-1/4"O-RNG F.1-1/2
334150	1	FITT.DK HB 1-1/4" 110 F.1-1/2"
390542	1	PLUG WASHER FOR 3/4'CAP NUT
716236	1	FITT.DK HB 1/2" ASSY. F. 3/4"
716413	1	FITT.DK PLUG ASSY. F.NOZ TUBE
717426	1	FITT.DK REDUC 1/4"BSP F.3/4"N
720856	1	FITT.DK 1/2'BSP ASSY.F.3/4'NUT
724621	1	FITT.DK HB 3/4"ASSY F.3/4" NUT

WWW.PC-TRONIK.PL

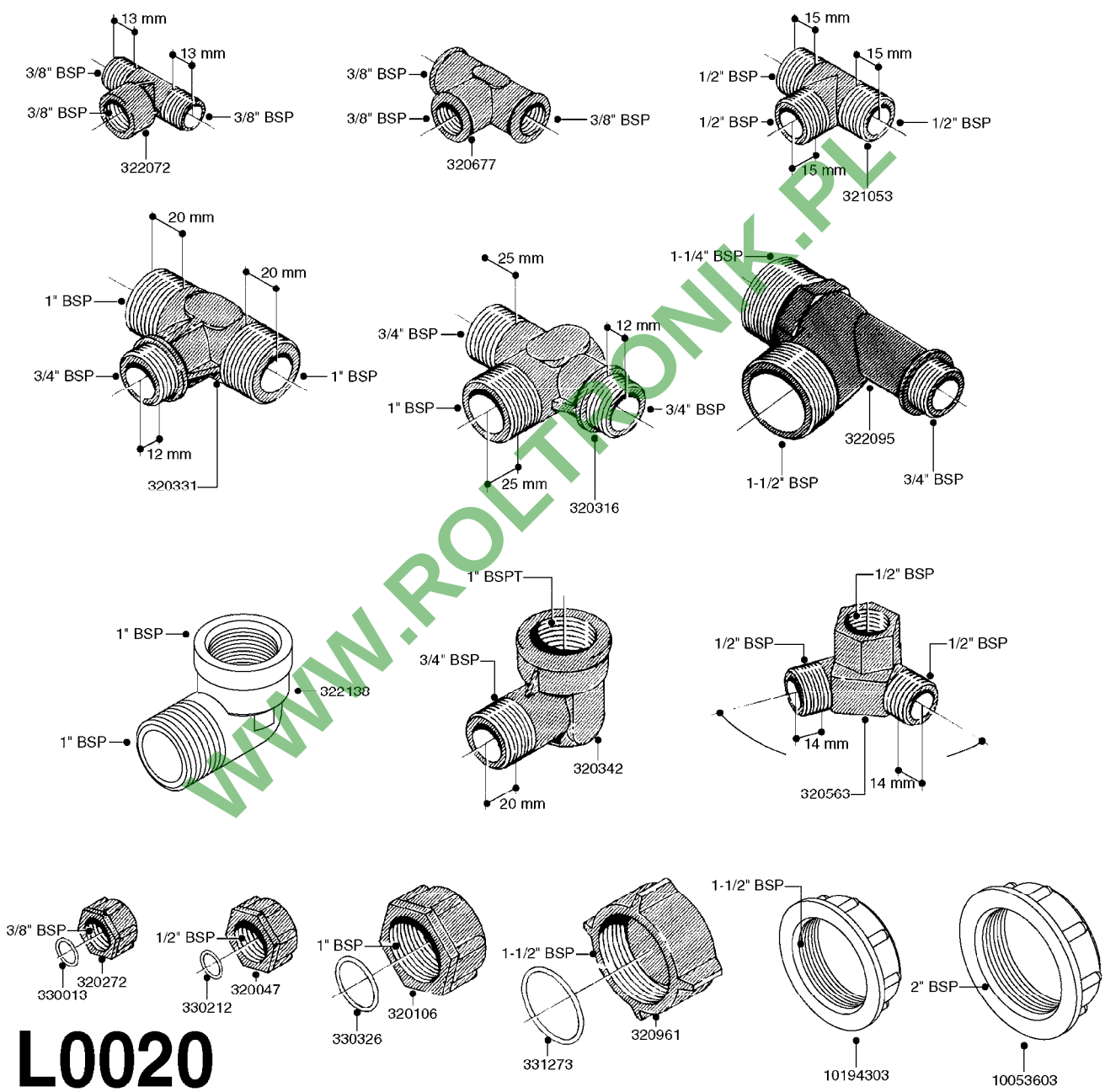

WWW.ROLTRONIK.PL

parts-n°	order qty	description
10053603	1	FITT. CAPNUT 2"BSP 5601
10194303	1	CAP BLANK 1 1/2 MCPHEE 210060
320047	1	FITT.DK CAPNUT 1/2" BSP
320106	1	FITT.DK CAPNUT 1" BSP
320272	1	FITT.DK CAPNUT 3/8' BSP
320316	1	FITT.DK TEE 3/4" X3/4" X1"BSP
320331	1	FITT.DK TEE 1" - 1" - 3/4" BSP
320342	1	FITT.DK EL 3/4"M X 1"F BSP
320563	1	FITT.DK 3 WAY 1/2" 110 DEG.
320677	1	NO LONGER AVAILABLE
320961	1	FITT.DK CAPNUT 1-1/2" BSP
321053	1	FITT.DK TEE 1/2 X1/2 X1/2" BSP
322072	1	FITT.DK TEE 3/8'X3/8'X3/8' BSP
322095	1	FITT.DK TEE 1-1/2 X1-1/4 X3/4" BSP
322138	1	FITT.DK ELB 1"M X 1"F BSP
330013	1	O-RING D15/D10X2.5 F.3/8"NUT
330212	1	O-RING D19/D14X2.4 F.1/2"NUT
330326	1	O-RING D30/D24X2 F.1"NUT
331273	1	O-RING D44/D38X2 F.1-1/2"

WWW.ROLTRONIK.PL

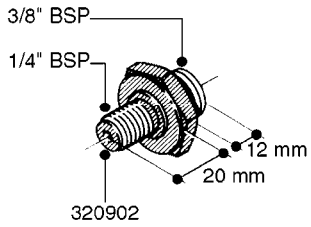

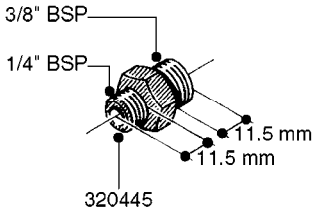

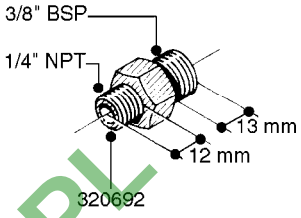

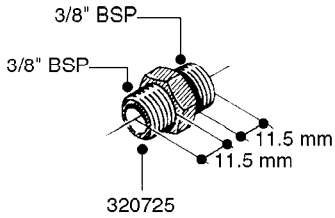

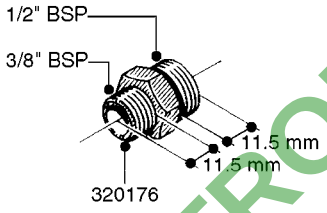

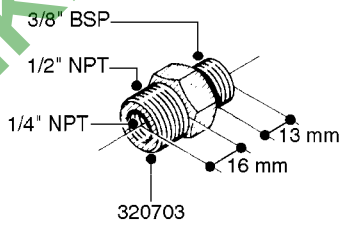

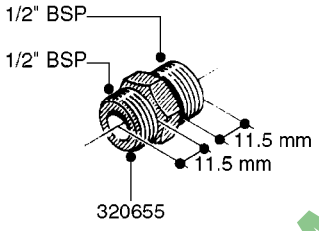

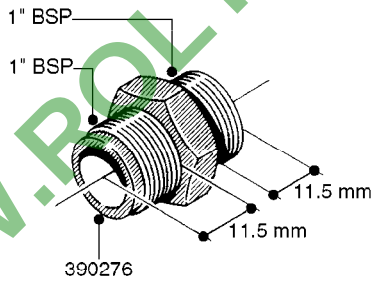

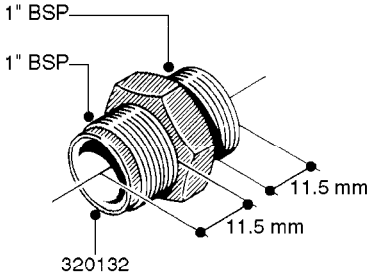

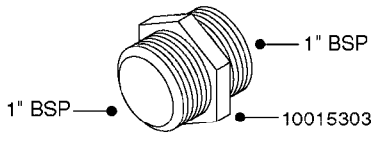

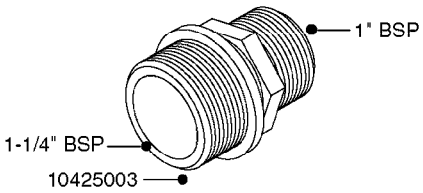

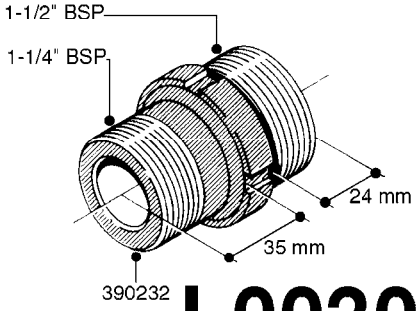

WWW.ROLTRONIK.PL

L0030

parts-n°	order qty	description
10015303	1	FITT.PO.HN 1.00X1.00 M1000
10425003	1	FITT.PO.HN 1.25X1.00 MCPHEE
320132	1	FITT.DK HN 1" BSP
320176	1	FITT.DK HN 3/8"X1/2" BSP
320445	1	FITT.DK HN 1/4"X3/8" BSP
320655	1	FITT.DK HN 1/2"-1/2" BSP
320692	1	FITT.DK HN 3/8'BSPX1/4'NPT
320703	1	FITT.DK HN 3/8BSP X1/2 &1/4NPT
320725	1	FITT.DK NIPPLE 3/8"-3/8" BSP
320902	1	FITT.DK HN 3/8'X 1/4' BSP
390232	1	FITT.DK HN 1-1/2' X 1-1/4' BSP
390276	1	FITT.DK HN 1'BSP

WWW.ROLTRONIK.PL

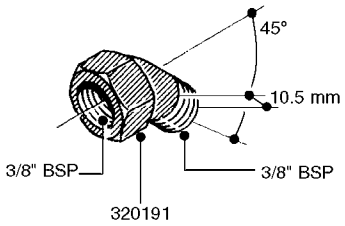

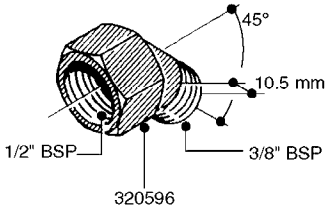

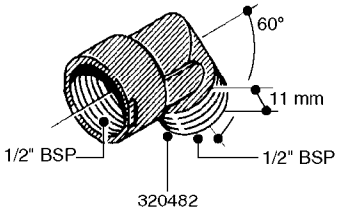

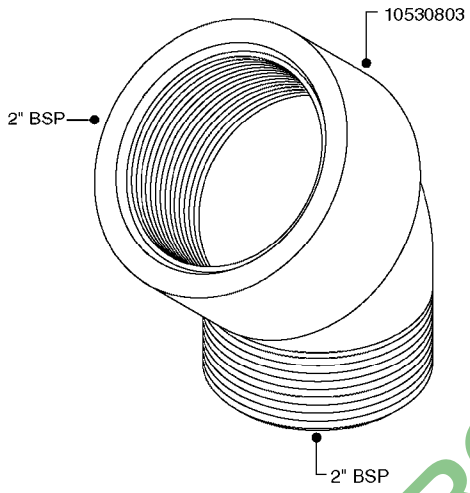

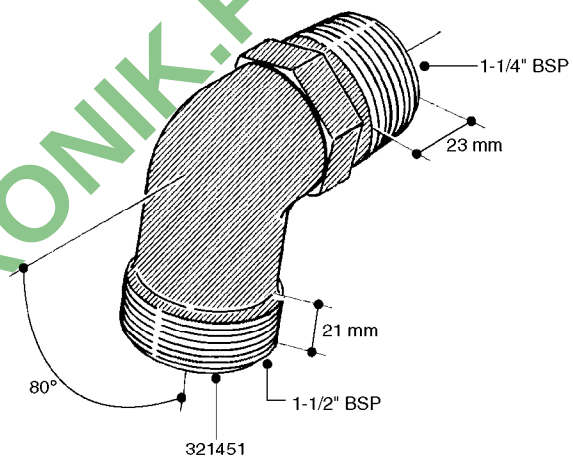

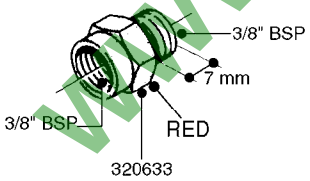

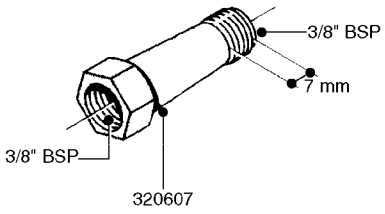

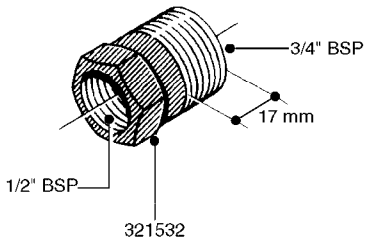

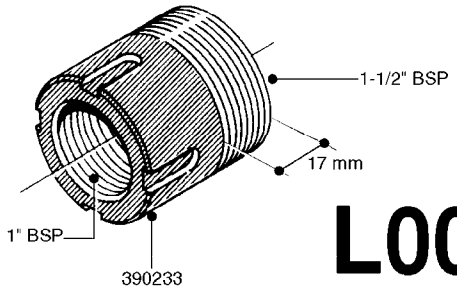

WWW.ROLTRONIK.PL

L0040

parts-n°	order qty	description
10530803	1	FITT.PO.SE 2.00X2.00 45 DEG.
320191	1	FITT.DK ELB 3/8' BSP 45 DEGREE
320482	1	FITT.DK ELB. 1/2" BSP 60 DEG.
320596	1	FITT.DK ELB 3/8'-1/2'BSP 45DEG
320607	1	FITT.DK HN 3/8M X 3/8F BSP LNG
320633	1	FITT.DK HN 3/8"M X 3/8"F BSP
321451	1	FITT.DK ELB.1-1/2 X1-1/4 80DEG
321532	1	FITT.DK REDUC 3/4' X 1/2' BSP
390233	1	FITT.DK REDUC 1-1/2" X 1" BSP

WWW.ROLTRONIK.PL

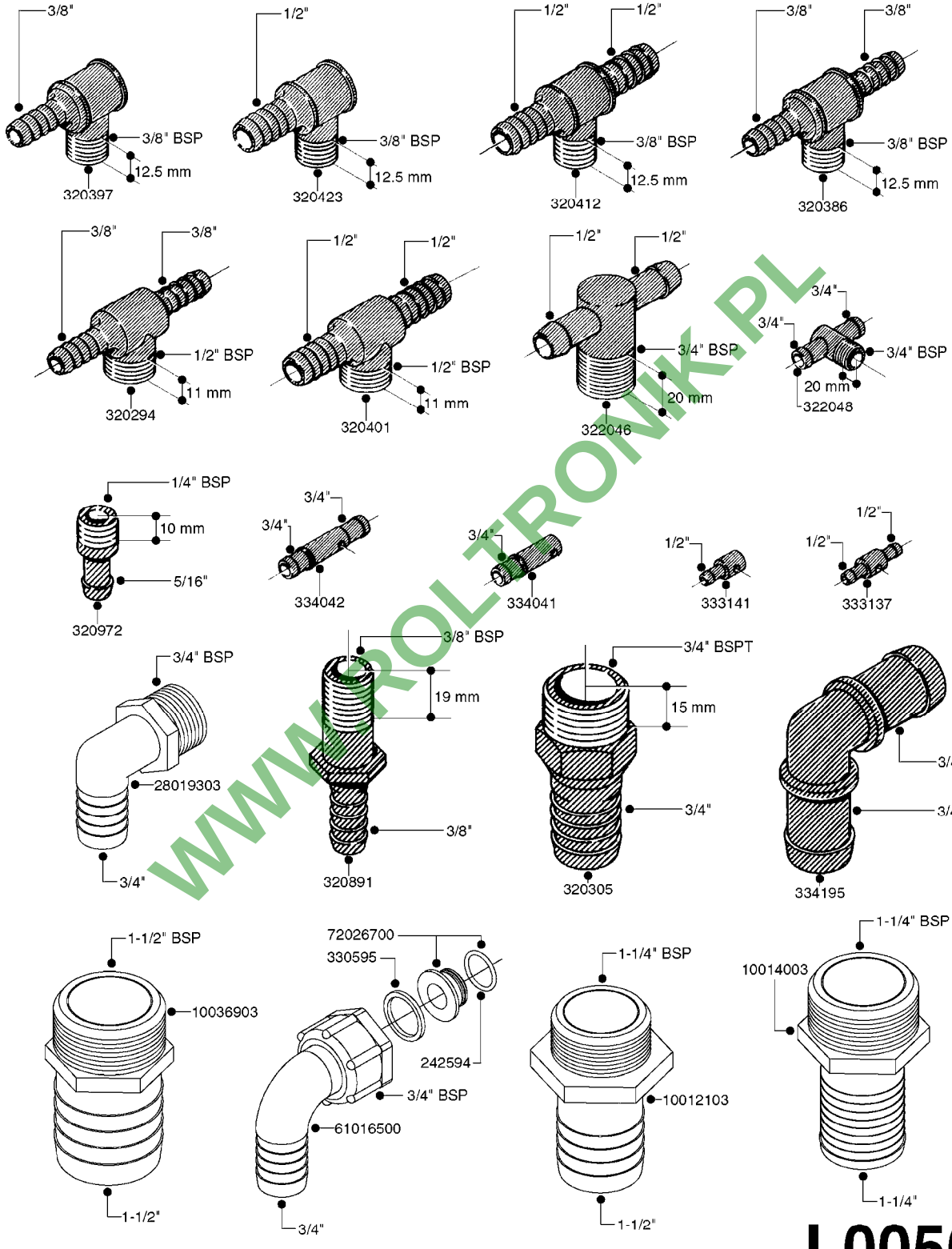

WWW.TROLTRONIK.PL

L0050

parts-n°	order qty	description
242594	1	O-RING D14 X 1.78 SCH.70-EPDM
320294	1	FITT.DK TEE 3/8X3/8HB X1/2"BSP
320305	1	FITT.DK HB 3/4'- 3/4' BSP
320386	1	FITT.DK TEE 3/8X3/8HB X3/8"BSP
320397	1	FITT.DK ELB 3/8"HB X 3/8" BSP
320401	1	FITT.DK TEE 1/2X1/2HB X1/2"BSP
320412	1	FITT.DK TEE 1/2X1/2HB X3/8'BSP
320423	1	FITT.DK ELB 1/2'HB X 3/8' BSP
320891	1	FITT.DK HB 3/8'- 3/8' BSP
320972	1	FITT.DK HB 5/16'- 1/4' BSP
322046	1	FITT.DK TEE 1/2X1/2HB X3/4'BSP
322048	1	FITT.DK TEE 3/4X3/4HB X3/4'BSP
330595	1	O-RING D24.6/D20X2.1 -3/4"
333137	1	FITT.DK CONN.1/2" F.NOZZ. DOUB
333141	1	FITT.DK CONN.1/2" F.NOZZ.SING
334041	1	FITT.DK CONN.3/4' F.NOZZ. SING
334042	1	FITT.DK CONN.3/4' F.NOZZ. DOUB
334195	1	FITT.DK ELB. 3/4"HB X 3/4"HB
10012103	1	FITT.PO.HB 1.25X1.50 IMB1012
10014003	1	FITT.PO.HB 1.25X1.25 IMB1010
10036903	1	FITT.PO.HB 1.50X1.50 IMB1212
28019303	1	FITTING HB ELB 3/4NPT-3/4HOSE
61016500	1	HOSE TAIL 3/4" 90°+RG CAP 3/4"
72026700	1	NOZZLE TUBE ADAPTER W/O-RING

WWW.ROLTRONIK.PL

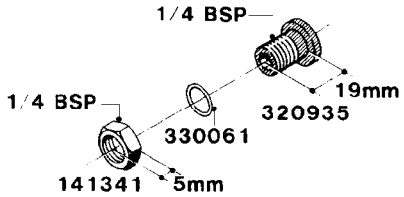

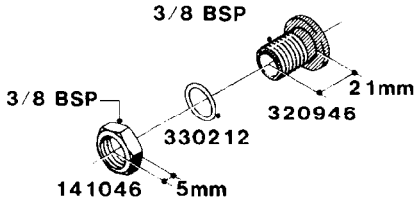

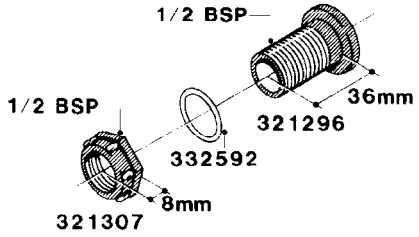

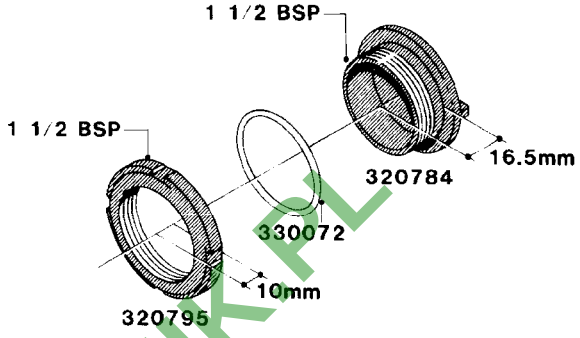

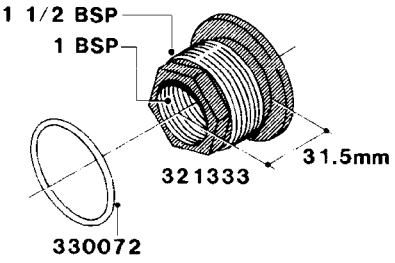

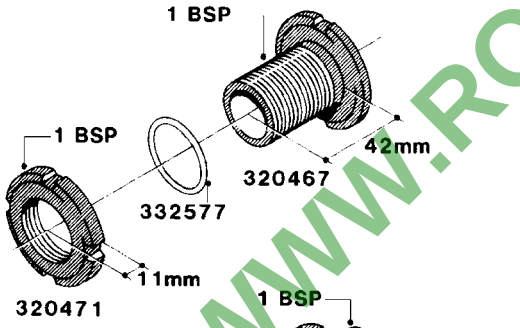

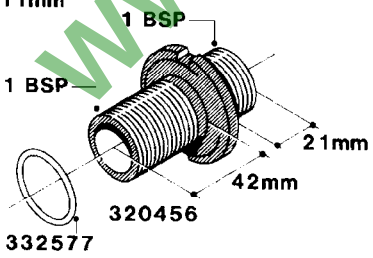

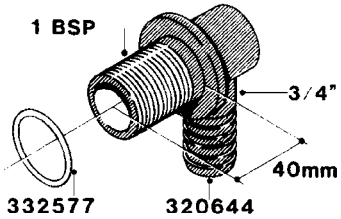

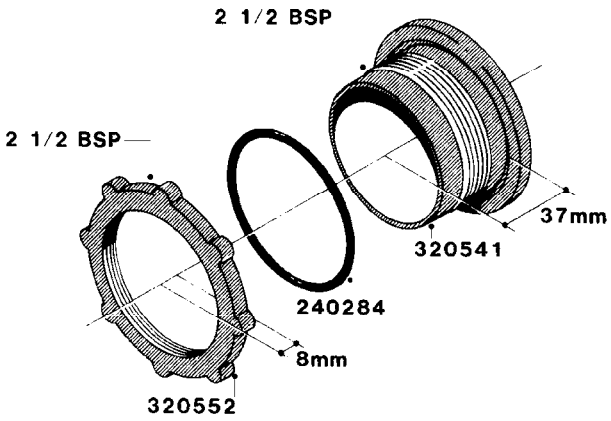

WWW.ROLTRONIK.PL

L0060

parts-n°	order qty	description
141046	1	NUT 3/8" BSP
141341	1	NUT 1/4' BSP
240284	1	O-RING D82,5/75 X 3,5
320456	1	FITT.DK BULKHEAD 1"BSP DOUBLE
320467	1	FITT.DK BULKHEAD 1"BSP SINGLE
320471	1	FITT.DK NUT 1" BSP JAMB
320541	1	FITT.DK BULKHEAD 2-1/2'BSP SIN
320552	1	FITT.DK NUT 2-1/2' BSP JAMB
320644	1	FITT.DK ELB.3/4"HB X 1" BSP
320784	1	FITT.DK CAP 1-1/2" BSP
320795	1	FITT.DK NUT 1-1/2" BSP JAMB
320935	1	FITT.DK BULKHEAD 1/4' BSP SING
320946	1	FITT.DK BULKHEAD 3/8' BSP SING
321296	1	FITT.DK BULKHEAD 1/2" BSP SING
321307	1	FITT.DK NUT 1/2" BSP JAMB
321333	1	FITT.DK BULK 1-1/2" X 1"F BSP
330061	1	O-RING D16/D11X2,5
330072	1	O-RING D53.5/D45.5X4
330212	1	O-RING D19/D14X2.4 F.1/2"NUT
332577	1	O-RING D38/D30X4 F.1" PUR.
332592	1	O-RING D26/D20X3

WWW.ROLTRONIK.PL

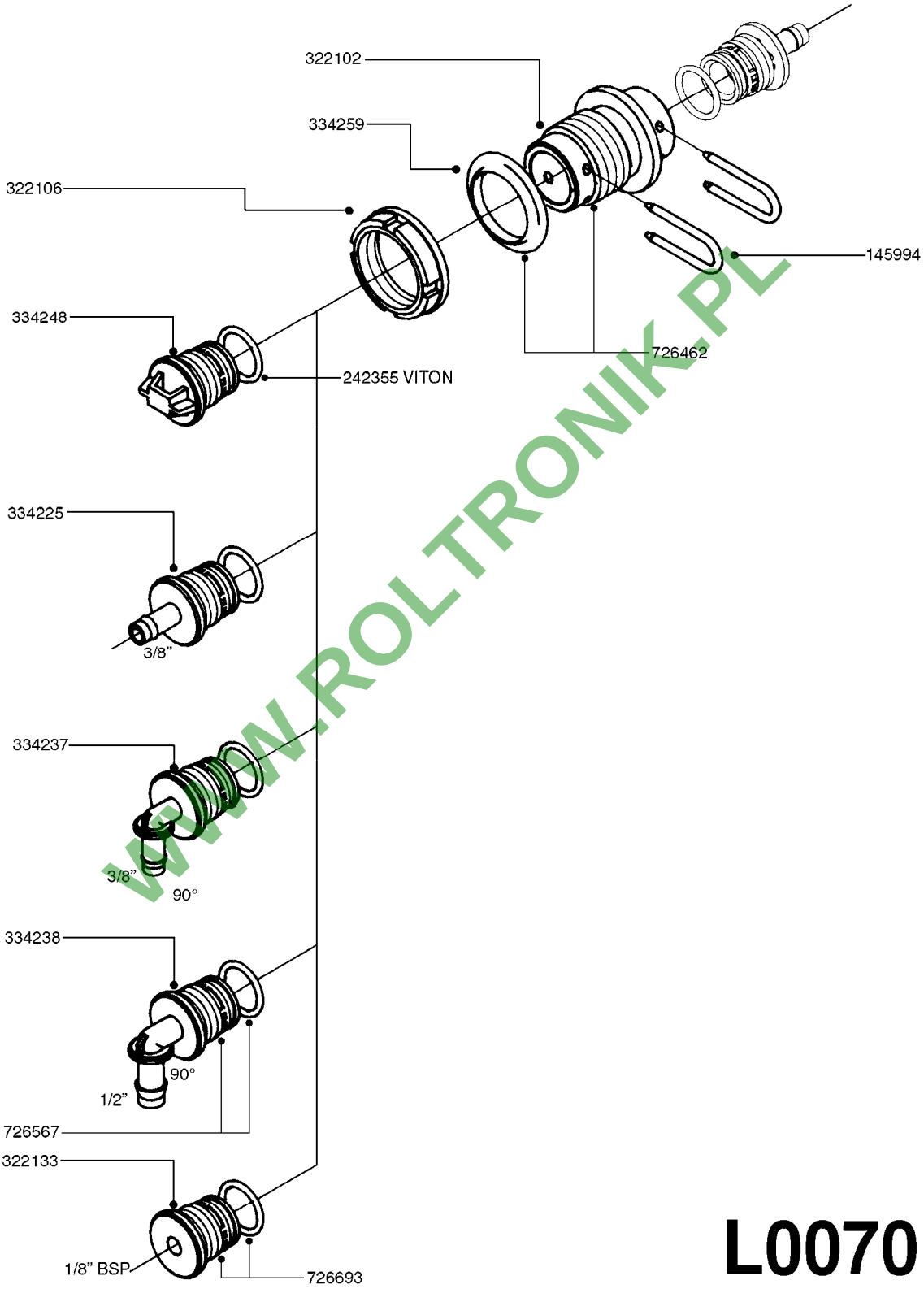

WWW.ROLTRONIK.PL

L0070

parts-n°	order qty	description
145994	1	FITT.DK S-40 FORK
242355	1	O-RING D19.2X3.0 VITON F.S-40
322102	1	FITT.DK S-40 BULKHEAD
322106	1	FITT.DK S-40 BULKHEAD NUT
322133	1	FITT.DK S-40 PLUG W 1/8 THREAD
334225	1	FITT.DK S-40 STR.3/8'
334237	1	FITT.DK S-40 ELB.3/8'
334238	1	FITT.DK S-40 ELB.1/2'
334248	1	FITT.DK S-40 PLUG
334259	1	GASKET F. S-40 BULKHEAD
726462	1	FITT. S40 BULHEAD W. GASKET
726567	1	FITT.DK S-40 ELB.1/2" W.ORING
726693	1	FITT.DK S-40 PLUG 1/8BSP ORING

WWW.ROLTRONIK.PL

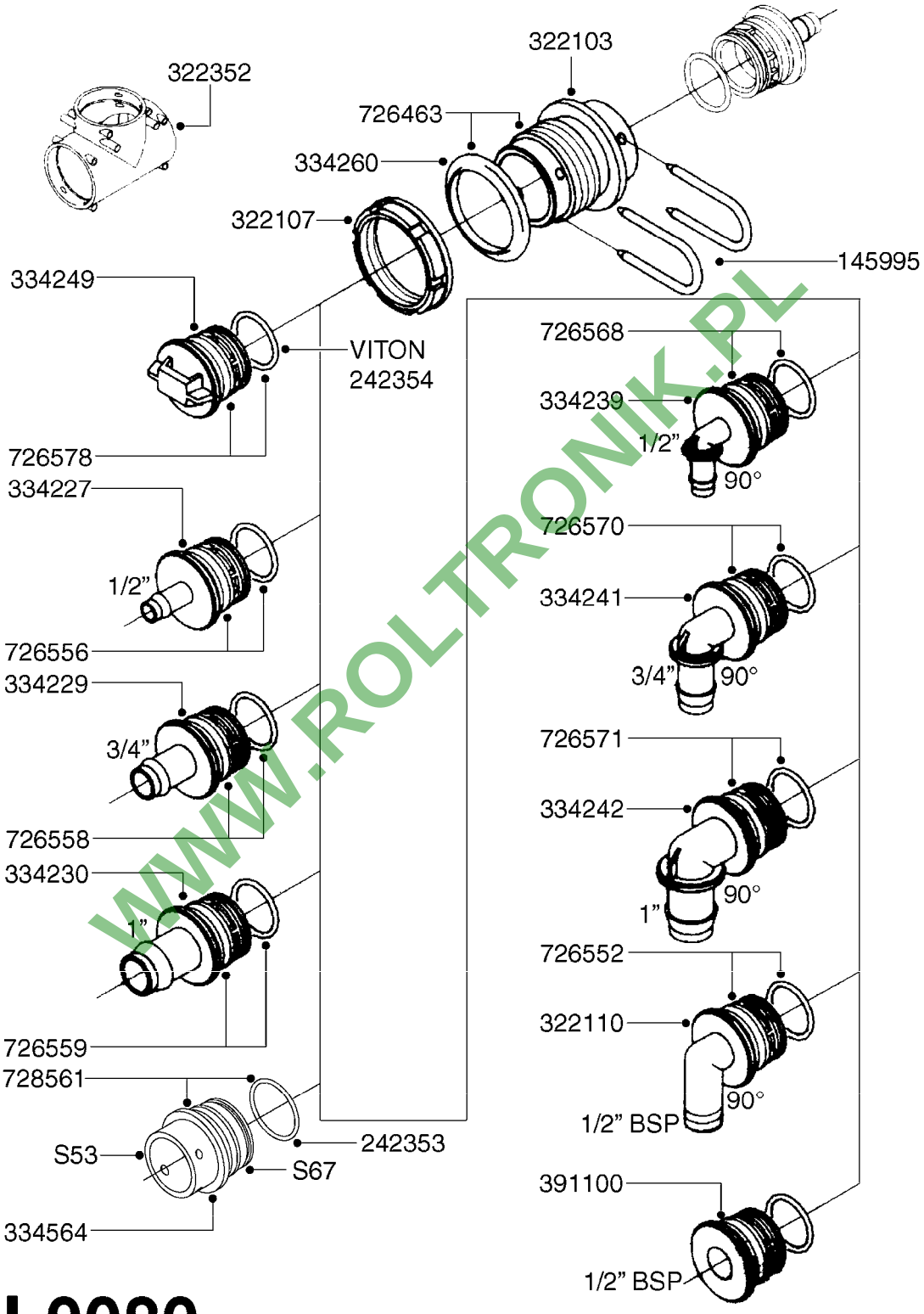

WWW.ROLTRONIK.PL

L0080

parts-nº	order qty	description
145995	1	FITT.DK S-53 FORK
242353	1	O-RING D44.2X3.0 VITON F.S-67
242354	1	O-RING D32.2X3.0 VITON F.S-53
322103	1	FITT.DK S-53 BULKHEAD
322107	1	FITT.DK S-53 BULKHEAD NUT
322110	1	FITT.DK S-53 ELB. 1/2" BSP
322352	1	FITT.DK S-53 TEE
334227	1	FITT.DK S-53 STR.1/2'
334229	1	FITT.DK S-53 STR.3/4"
334230	1	FITT.DK S-53 STR.1"
334239	1	FITT.DK S-53 ELB.1/2"
334241	1	FITT.DK S-53 ELB.3/4"
334242	1	FITT.DK S-53 ELB.1"
334249	1	FITT.DK S-53 PLUG
334260	1	GASKET F. S-53 BULKHEAD
334564	1	FITT.DK S-67 TO S-53 ADAPTER
391100	1	FITT.DK S-53THREAD INS.1/2"BSP
726463	1	FITT.DK S53 BULKHEAD W/GASKET
726552	1	FIT.DK S-53X90 1/2" BSP,O-RING
726556	1	FITT.DK S-53 HB 1/2" W/O-RING
726558	1	FITT.DK S53 STR. 3/4" W.ORING
726559	1	FITT DK. S-53 HB 1" W/O-RING
726568	1	FITT.DK.S-53 HB 1/2"90 W/ORING
726570	1	FITT.DK S-53 ELB.3/4" W.ORING
726571	1	FITT.DK S-53 ELB.1", W ORING
726578	1	FITT.DK S53 PLUG WITH O-RING
728561	1	FITT.DK. S67M - S53F REDUCER

WWW.ROLTRONIK.PL

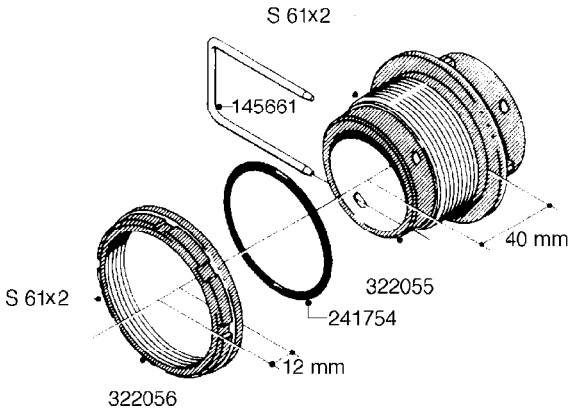

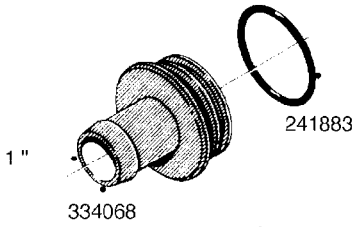

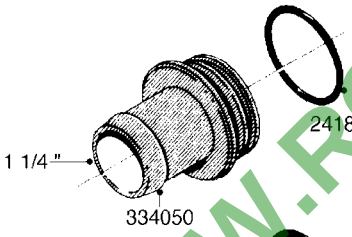

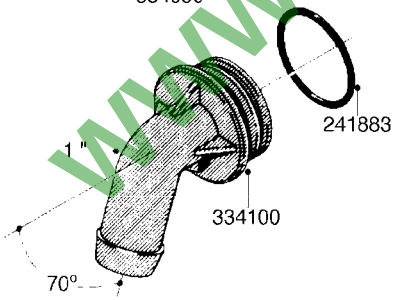

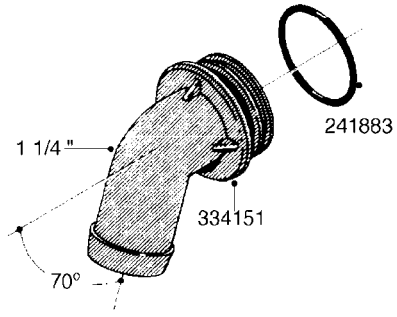

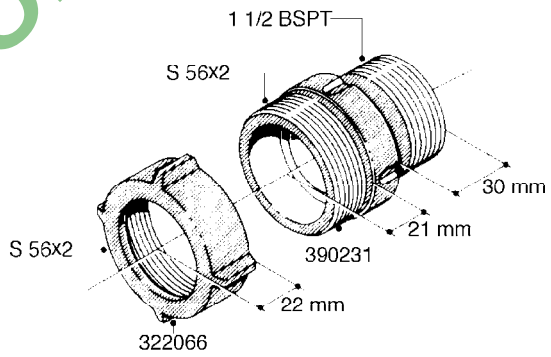

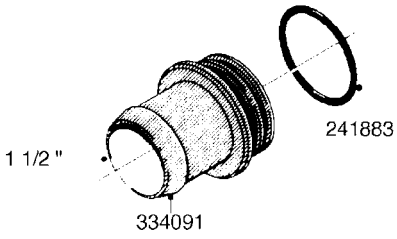

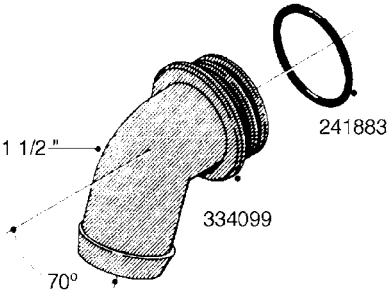

L0090

WWW.ROLTRONIK.PL

parts-nº	order qty	description
145661	1	FITT.DK S-61 FORK
241754	1	O-RING D59.5X3
241883	1	O-RING D39.2X3 NITRIL 242020
322055	1	FITT.DK S-61 BULKHEAD
322056	1	FITT.DK S-61 BULKHEAD NUT
322066	1	FITT.DK S-56 NUT
334050	1	FITT.DK S-61 STR.1-1/4"
334068	1	FITT.DK S-61 STR.1"
334091	1	FITT.DK S-61 STR.1-1/2'
334099	1	FITT.DK S-61 ELB.1-1/2"110 DEG
334100	1	FITT.DK S-61 ELB.1" 110 DEG.
334151	1	FITT.DK S-61 ELB.1-1/4"110 DEG
390231	1	FITT.DK NIPPLE 1-1/2 X S56

WWW.ROLTRONIK.PL

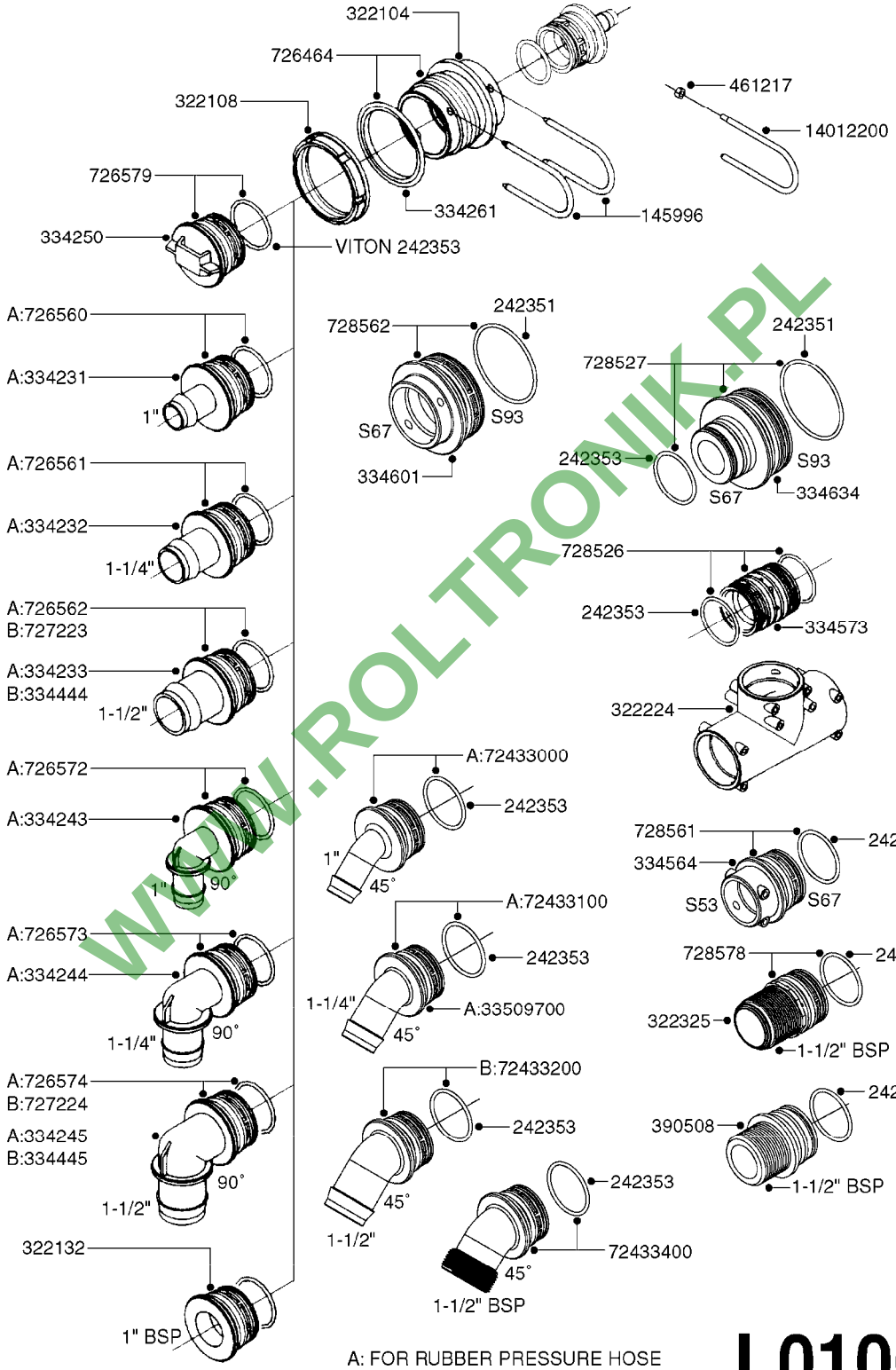

A: FOR RUBBER PRESSURE HOSE
B: FOR PVC SPIRAL HOSE

L0100

WWW.ROLTRONIK.PL

parts-n°	order qty	description
145996	1	FITT.DK S-67 FORK
242351	1	O-RING D69.5X3.0 VITON F.S-93
242353	1	O-RING D44.2X3.0 VITON F.S-67
322104	1	FITT.DK S-67 BULKHEAD
322108	1	FITT.DK S-67 BULKHEAD NUT
322132	1	FITT.DK S-67 THREAD INS.1'BSP
322224	1	FITT.DK S-67 TEE
322325	1	FITT.DK S-67 X 1-1/2"BSP LONG
334231	1	FITT.DK S-67 STR.1'
334232	1	FITT.DK S-67 STR.1-1/4'
334233	1	FITT.DK S-67 STR.1-1/2' RUBBER
334243	1	FITT.DK S-67 ELB.1"
334244	1	FITT.DK S-67 ELB.1-1/4"
334245	1	FITT.DK S-67 ELB. 1-1/2'RUBBER
334250	1	FITT.DK S-67 PLUG
334261	1	GASKET F. S-67 BULKHEAD
334444	1	FITT.DK S-67 STR.1-1/2" PVC
334445	1	FITT.DK S-67 ELB.1-1/2"
334564	1	FITT.DK S-67 TO S-53 ADAPTER
334573	1	FITT.DK S-67 CONNECTOR
334601	1	FITT.DK S-93 TO S67 ADAPTOR
334634	1	FITT.DK ADAPTER S-93M S67M
390508	1	FITT DK S67X1.5M BSPalt322325
461217	1	NUT HEX M5 LOCK
726464	1	FITT.DK S-67 BULKHEAD W/GASKET
726560	1	FITT.DK S-67 STR.1" W.O'RING
726561	1	FITT.DK S-67 STR.1-1/4" O'RING
726562	1	FITT.DK.S-67 HB 1-1/2"W.O-RING
726572	1	FITT.DK S-67 1" ELBOW 90 ASSY.
726573	1	FITT. S67 5/4" 90° W/O-RING
726574	1	FITT.DK S67X90,1.5HB PRESSURE
726579	1	FITT. S67 PLUG W/O-RING
727223	1	FITT.S67 1.5" STRAIT S W/ORING
727224	1	FITT.DK S67X90,1.5HB SUCTION
728526	1	FITT.DK S-67 CONNECT W. ORINGS
728527	1	ADAPTER S67M TO S93M W/ORING
728561	1	FITT.DK. S67M - S53F REDUCER
728562	1	FITT.DK S-93 TO S67 ADAPTOR
728578	1	FITT.DK S-67X1-1/2"BSP LG W/OR
14012200	1	FITT.DK S-67 FORK W/M5 THREADS
33509700	1	FITT.DK S-67 45° 1-1/4"
72433000	1	FITT.S67 1" 45° W/ORING
72433100	1	FITT.DK S-67 45° 1-1/4"W/ORING
72433200	1	FITT.S67 1-1/2" 45°PVC W/ORING
72433400	1	FITT.S67 1-1/2" 45°BSP W/ORING

WWW.PCL-TRONIK.PL

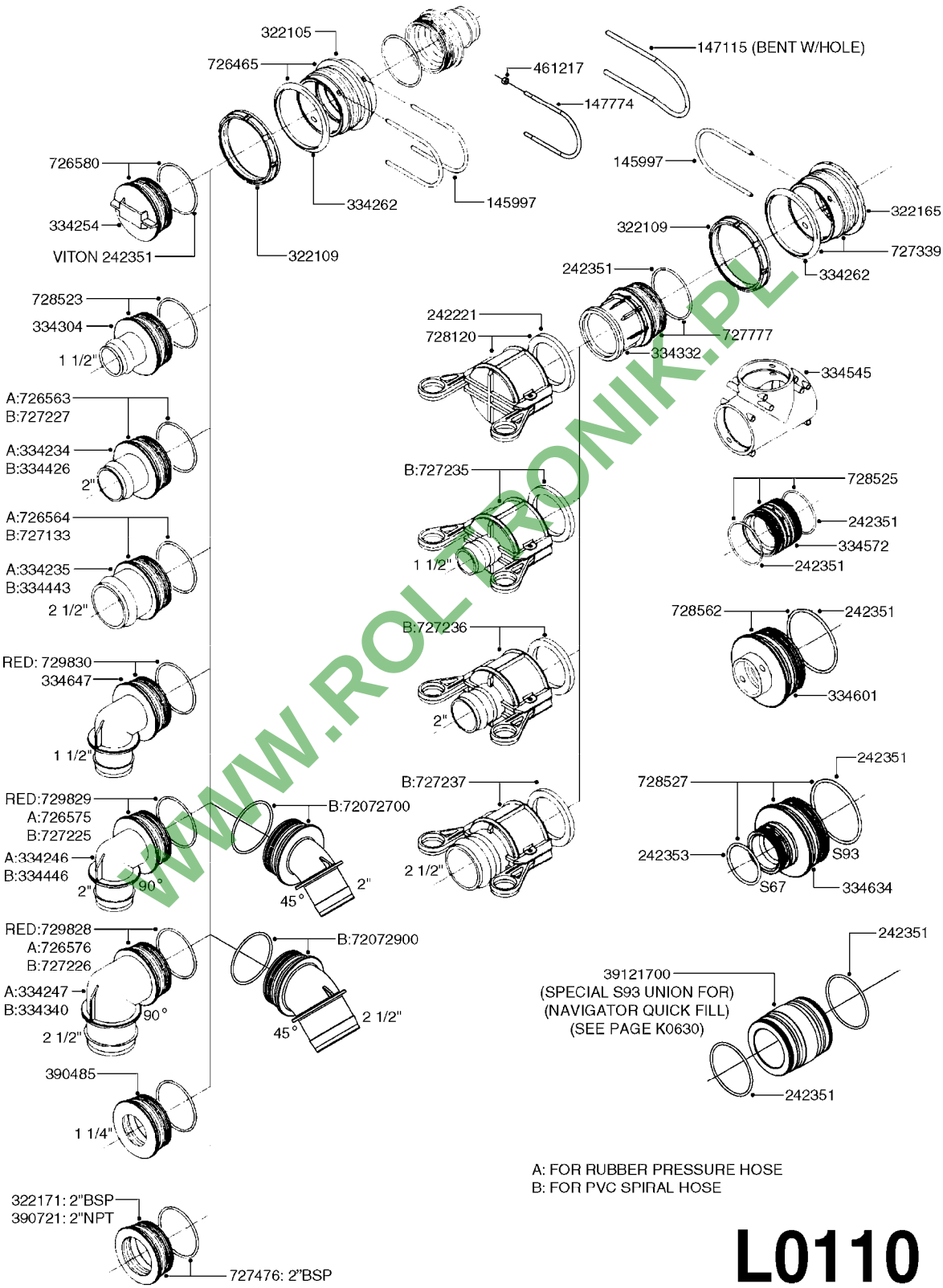

A: FOR RUBBER PRESSURE HOSE
B: FOR PVC SPIRAL HOSE

L0110

WWW.ROL-TRONIK.PL

parts-nº	order qty	description
145997	1	FITT.DK S-93 FORK
147115	1	FITT.DK S-93 FORK SPECIAL
147774	1	FITT.DK S-93 FORK W. M5 THREAD
242221	1	GASKET F. S-93 QUICK COUPLERS
242351	1	O-RING D69.5X3.0 VITON F.S-93
242353	1	O-RING D44.2X3.0 VITON F.S-67
322105	1	FITT.DK S-93 BULKHEAD DOUBLE
322109	1	FITT.DK S-93 BULKHEAD NUT
322165	1	FITT.DK S-93 BULKHEAD SINGLE
322171	1	FITT.DK S-93 THREAD INS.2"BSP
334234	1	FITT.DK S-93 STR.2" RUBBER
334235	1	FITT.DK S-93 STR.2-1/2'RUBBER
334246	1	FITT.DK S-93 ELB.2" PVC
334247	1	FITT.DK S-93 ELB.2-1/2'RUBBER
334254	1	FITT.DK S-93 PLUG
334262	1	GASKET F.S-93 BULKHEAD
334304	1	FITT.DK S-93 STR.1-1/2" PVC
334332	1	FITT.DK S-93 MALE QUICK COUP.
334340	1	FITT.DK S-93 ELBOW 2.5"
334426	1	FITT.DK S-93 STR.2'
334443	1	HOSE PIPE BR.21/2'-EVEN S
334446	1	FITT.DK S-93 ELB.2" PVC
334545	1	FITT.DK S-93 TEE
334572	1	FITT.DK S-93 ADAPTOR MALE MALE
334601	1	FITT.DK S-93 TO S67 ADAPTOR
334634	1	FITT.DK ADAPTER S-93M S67M
334647	1	FITT.DK S93 ELB 1-1/2" 90 PVC
390485	1	FITT.DK S-93 PLUG W D34 HOLE
390721	1	FITT.DK S-93 PLUG W/2'NPT THRE
461217	1	NUT HEX M5 LOCK
726465	1	FITT.DK S-93 BULKHEAD W/GASKET
726563	1	FITT.DK S-93 STR 2" W/O-RING
726564	1	HOSE TAIL 2 1/2' W.O-RING
726575	1	FITT.DK S-93 ELB. 2' RUBBER
726576	1	FITT. DK S-93 2 1/2" 90°
726580	1	FITT. S93 PLUG W/O-RING
727133	1	FITT. S93 2-1/2" STR. S W/O-RI
727225	1	FITT.DK S-93 ELB.2'PVC W/ORING
727226	1	FITT. S93 2-1/2" 90° S W/O-RIN
727227	1	FITT.DK S-93 STR.2' W/ORING
727235	1	QUICK COUPLER FEMALE W 1-1/2HB
727236	1	QUICK COUPLER FEMALE W 2'HB
727237	1	QUICK COUPLER FEMALE W2-1/2'HB
727339	1	FITT. S93 DRAIN BULKHEAD W/O-R
727476	1	FITT. DK S-93 2"FM THD W.ORING
727777	1	QUICK COUPLER S93 DRAIN W/O-RI
728120	1	QUICK COUPLER CAP F.S93 DRAIN
728523	1	FITT.DK S-93 STR.1-1/2"
728525	1	FITT. S93 CONNECTOR W/O-RINGS
728527	1	ADAPTER S67M TO S93M W/ORING
728562	1	FITT.DK S-93 TO S67 ADAPTOR
729828	1	FITT.DK S-93 ELB 2-1/2" RED
729829	1	FITT.DK S-93 ELB 2 RED
729830	1	FITT.DK S-93 ELB 1-1/2" 90 RED
39121700	1	FITT.DK S93 ADAP LG MALE MALE
72072700	1	FITT.DK S-93 45D 2" PVC
72072900	1	FITT.S93 2-1/2" 45°PVC W/ORING

WWW.ROTRONIK.PL

I.D.	PART # (ONE FOOT)	
3/8" 1/2" 3/4" 1" 1-1/4"	92701703 92702103 92703203 92712403 92734403	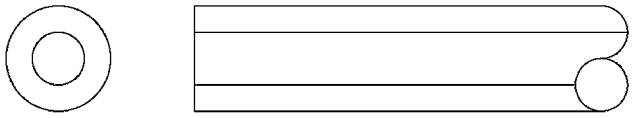 RUBBER HOSE SMOOTH, BLACK, TWO BLUE STRIPES
5/16" 3/8" 1/4" 1/2" 3/4"	927281 927284 927268 927269 927270	 PVC HOSE SHINY, BLACK, SMOOTH, TWO WHITE STRIPES
1" 1-1/4" 1-1/2" 2" 2-1/2"	92702403 92738900 92702603 92702703 92702803	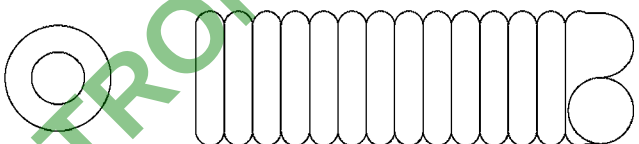 PVC SPIRAL SUCTION HOSE SHINY, RIBBED, GRAY
3/4"	927205	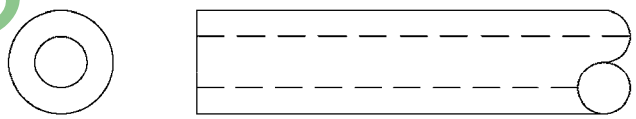 PVC HOSE CLEAR, SMOOTH
1/2" 3/4"	10631003 927231	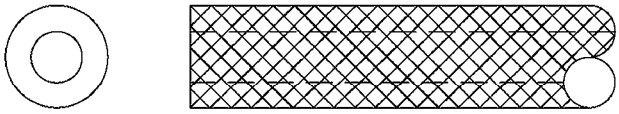 PVC HOSE SMOOTH, CLEAR, REINFORCED WITH WHITE MESH
4mm 6mm 8mm 10mm	927253 RED 927264 RED 927306 BLACK 927330 BLACK	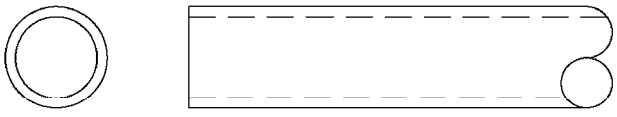 PVC AIR HOSE SMOOTH

WWW.ROLTRONIK.PL

L0120

BULK HOSE
L0120-HIN, 01:01:16

parts-n°	order qty	description
927205	1	HOSE R X CLEAR X 3/4 X 0012"
927231	1	HOSE R X PVCX3/4 CLR/BRD 0012"
927253	1	AIR HOSE, DIAMETER 4MM
927264	1	HOSE R X PE D6/D4 X 0012"
927268	1	HOSE R X PVC X 1/4 X 0012"
927269	1	HOSE R X PVC X 1/2 X 0012"
927270	1	HOSE R X PVC X 3/4 X 0012"
927281	1	HOSE R X PVC X 5/16 X 0012"
927284	1	HOSE 3/8 PVC W/ INSERT
927306	1	HOSE R X PE D8/D6 X 0012"BLACK
927330	1	HOSE R X PE D10/D8 X 012"BLACK
10631003	1	HOSE R X CLEAR BRAID.X 1/2 12"
92701703	1	HOSE R X3/8" X300PSI WP X0012"
92702103	1	HOSE R X1/2" X300PSI WP X0012"
92702403	1	HOSE PVC SUCT GRAY 1"
92702603	1	HOSE PVC SUCT GRAY 1-1/2"
92702703	1	HOSE PVC SUCT GRAY 2"
92702803	1	HOSE PVC SUCT GRAY 2.5"
92703203	1	HOSE R X3/4" X300PSI WP X0012"
92712403	1	HOSE R X1" X300PSI WP X0012"
92734403	1	HOSE R X5/4" X200PSI WP X0012"
92738900	1	HOSE R X PVC X 1-1/4" 0012"

WWW.ROLTRONIK.PL

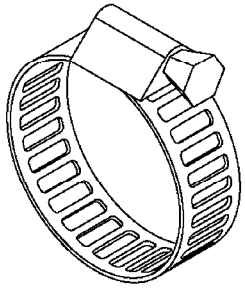

1-1/2" OR SMALLER CLAMPS

Hose Size	Pressure	Suction	Clamp Code
3/8"	28029803		6706
1/2"	28029803		6706
3/4"	28029903		6712
1"	28030003	28029903	6716
1-1/4"	28030103		6724
1-1/2"		28030103	6724
2"		28030203	235-67
2-1/2"		28030303	235-74
3"		28030403	235-82

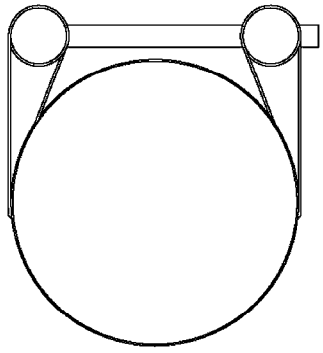

2" OR LARGER CLAMPS

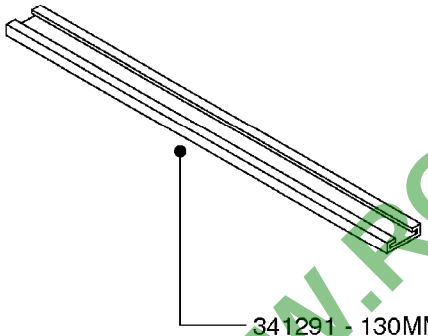

341291 - 130MM
341292 - 180MM
341301 - 230MM

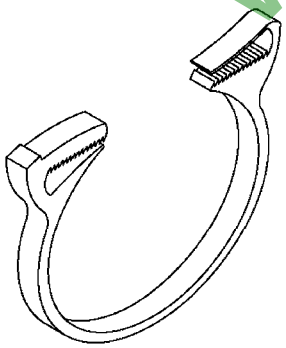

5/16" - 334686
3/8" - 334533
1/2" - 334534
3/4" - 334531
1" - 334680

WWW.ROLTRONIK.PL

L0130

HOSE CLAMPS
L0130-HIN, 01:01:16

parts-n°	order qty	description
334531	1	CLAMP HOSE PLASTIC 3/4"
334533	1	CLAMP HOSE PLASTIC 3/8"
334534	1	CLAMP HOSE PLASTIC 1/2"
334680	1	CLAMP HOSE PLASTIC 1"
334686	1	CLAMP HOSE PLASTIC 5/16'
341291	1	RUBBER HOSE CLAMP COVER 130MM
341292	1	RUBBER HOSE CLAMP COVER 180MM
341301	1	RUBBER HOSE CLAMP COVER 230MM
28029803	1	CLAMP HOSE GEAR P1/2" 6708
28029903	1	CLAMP HOSE GEAR P3/4"-S1" 6712
28030003	1	CLAMP HOSE GEAR P1" 6716
28030103	1	CLAMP HOSE GEAR P5/4-S1.5"6724
28030203	1	CLAMP HOSE T-BOLT S2" 235-67
28030303	1	CLAMP HOSE T-BOLT S2.5" 235-76
28030403	1	CLAMP HOSE T-BOLT S3" 235-82

WWW.ROLTRONIK.PL

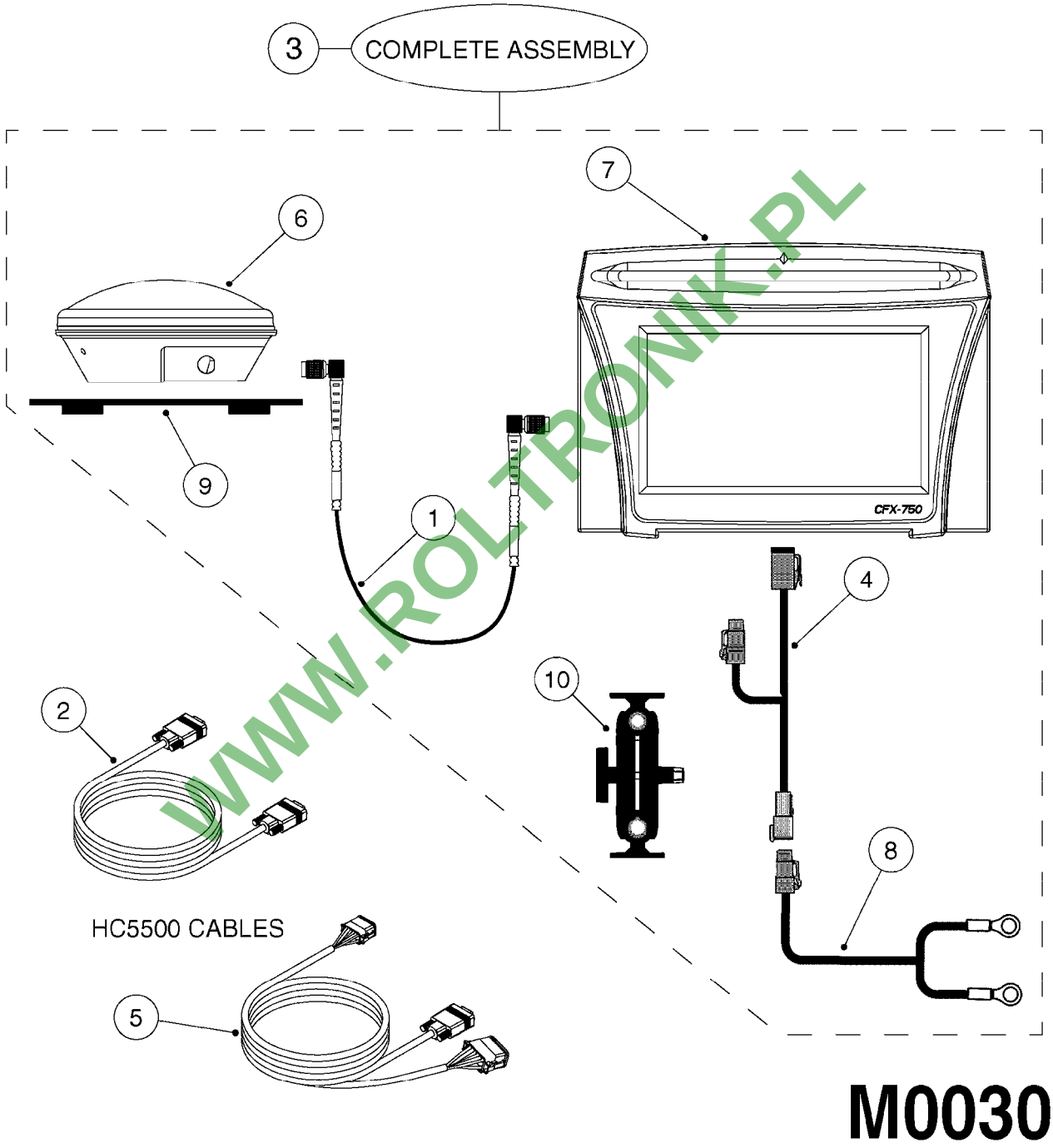

WWW.ROLTRONIK.PL

M0030

CFX-750 DISPLAY, DGPS
M0030-HIN, 01:01:16

Pos.	parts-n°	order qty	description
1	26007603	1	CABLE, ANTENNA, EZGUIDEPLUS
2	26012003	1	NULL MODEM CABLE
3	26021403	1	CFX-750 DISPLAY, DGPS
4	26021603	1	CABLE, POWER BUS, CAN CFX-750
5	26021703	1	CABLE, ASC INTERFACE, CFX-750
6	26021803	1	AG-25 ANTENNA L1/L2 GLN
7	26022103	1	CFX-750 DISPLAY ONLY
8	26022603	1	CFX-750 Basic Power Cable
9	28048203	1	EZ-GUIDE 500 MOUNT F.AG15 ANT.
10	28048303	1	EZ-GUIDE 250/500 RAM MNT.1.5"

WWW.ROLTRONIK.PL

EZ-GUIDE PLUS LIGHT BAR
M0040-HIN, 01:01:16

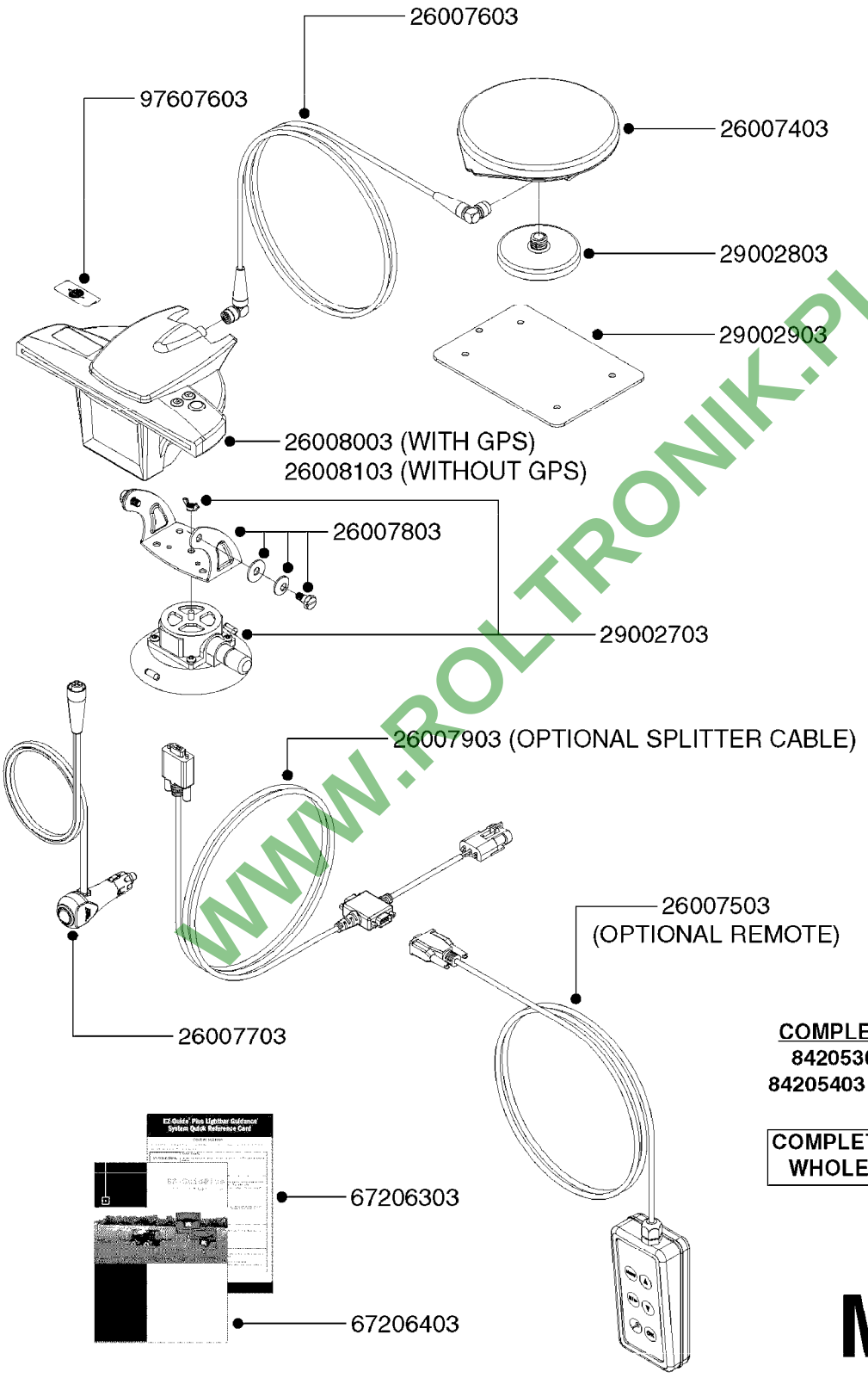

COMPLETE ASSEMBLY:
84205303 (WITH GPS)
84205403 (WITHOUT GPS)

COMPLETE ASSEMBLIES WHOLEGOODS ITEMS

M0040

WWW.ROLTRONIK.PL

EZ-GUIDE PLUS LIGHT BAR
M0040-HIN, 01:01:16

Date 16.03.2016 13:36

parts-n°	order qty	description
26007403	1	ANTENNA,HURRICANE F. EZGUIDEPL
26007503	1	REMOTE KEYPAD EZ-GUIDE PLUS
26007603	1	CABLE, ANTENNA, EZGUIDEPLUS
26007703	1	CABLE, POWER F. EZGUIDEPLUS
26007803	1	BRACKET KIT F. EZGUIDEPLUS
26007903	1	EZ-Guide 500 External Interfac
26008003	1	LIGHT BAR ASSM WITH GPS
26008103	1	LIGHT BAR ASSM WITHOUT GPS
29002703	1	VACUUM CUP 4 1/2" 1420I
29002803	1	MOUNT, MAG F. ANTENNA
29002903	1	PLATE, F. ANTENNA MOUNT
67206303	1	QUICK REFERENCE CARD EZ-GUIDE+
67206403	1	MANUAL EZ GUIDE PLUS
84205303	1	EZ GUIDE PLUS W GPS, NO LABLE
84205403	1	EZ GUIDE PLUS W/O GPS,NO LABLE
97607603	1	DECAL COMPANY 45MM X 20MM

WWW.ROLTRONIK.PL

EZ-STEER STEERING SYSTEM
M0050-HIN, 01:01:16

Page 0

Date 16.03.2016 13:36

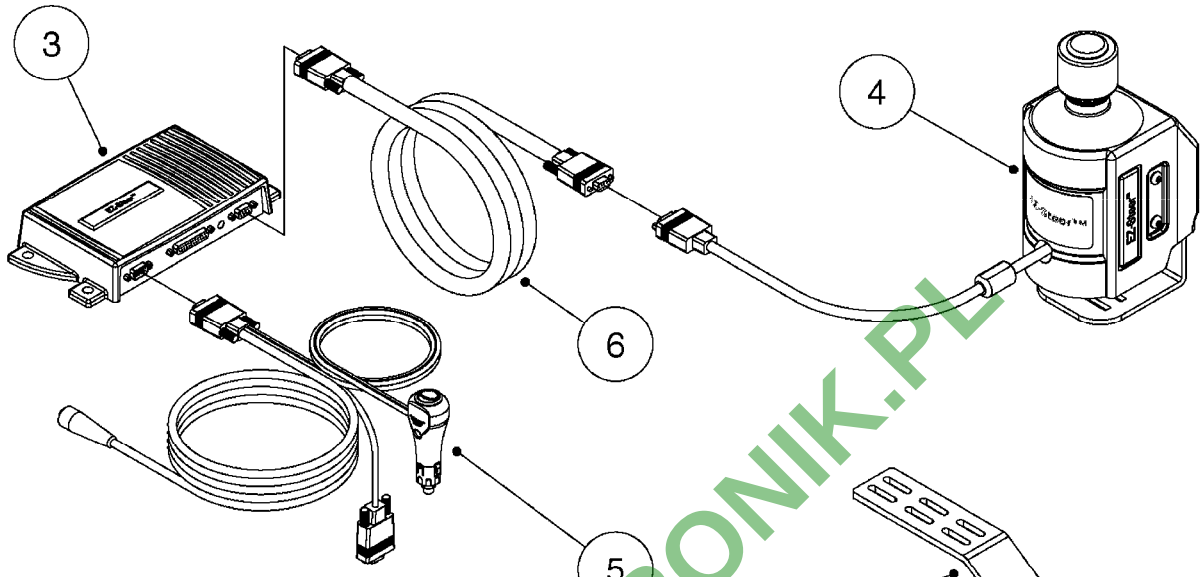

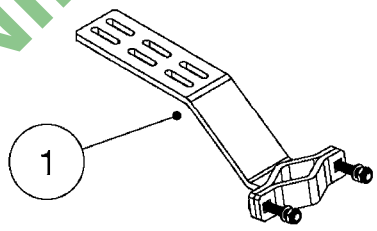

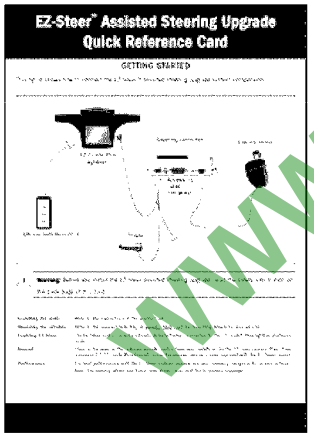

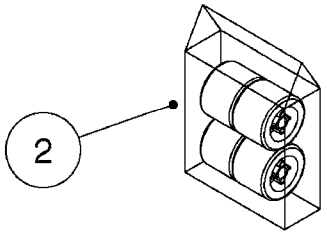

COMPLETE ASSEMBLY 8

COMPLETE ASSEMBLIES
WHOLEGOODS ITEMS

M0050

WWW.ROLTRONIK.PL

Pos.	parts-n°	order qty	description
1	26008803	1	EZ-STR.BKT-JD 4000,8000 4WD
1	26008903	1	EZ-STR.BKT-JD80002WD,7X20,9000
1	26009003	1	EZ-STR.BKT-CASE IH 7100/7200
1	26009103	1	EZ-STR.BKT-JD COMBINE&ROGATOR
1	26009203	1	EZ-STR.BKT-JD 6000,7000
1	26009303	1	EZ-STR.BKT-BUHLER,NH VERSATILE
1	26009403	1	EZ-STR.BKT-STEIGER,NH VERSATIL
1	26009503	1	EZ-STR.BKT-INTERNATIONAL TRUCK
1	26009603	1	EZ-STR.BKT-AGCHEM TERRAGATOR
1	26009703	1	EZ-STR.BKT-CASE IH MXM
1	28036903	1	EZ-STR.BKT-CASE IH COMB.1600
1	28037003	1	EZ-STR.BKT-JD 89XX,71XX,72XX
1	28037103	1	EZ-STR.BKT-JD 8000/9000
1	28037203	1	EZ-STR.T2 TERRAIN COMP.UPDATE
1	28037303	1	EZ-STR.BKT-SPR.COUPE 3000/4000
1	28038203	1	EZ-STR.BKT-FENDT 924
1	28046503	1	EZ-STR.BKT-AGCO DT/RT,MF64/74
1	28047803	1	EZ-STR.BKT.-NH TVT,CASE IH CVX
1	28050203	1	EZ-STR.BKT-CASE JX(U),NH TL(A)
1	28055203	1	EZ-STR.BKT-CASE MXM/N.HOLLAND
1	28055903	1	EZ-STR.BKT-WILMAR EAGLE
2	26009803	1	EZ-STEER FOAM WHEELS 4-PK
3	26009903	1	EZ-STEER CONTROLLER
4	26010003	1	EZ-STEER MOTOR KIT
5	26010103	1	EZ-STEER POWER CABLE
6	26010203	1	EZ-STEER MOTOR CABLE 3M
7	67210803	1	QUICK REFERENCE CARD EZ-STEER
8	84205503	1	EZ-STEER SYSTEM COMPLETE

WWW.ROLTROK.PL

HARDI	**Agroparts: www.HARDI-INTERNATIONAL.com**	
	EZ-GUIDE 500 LIGHTBAR M0060-HIN, 01:01:16	Page 0 Date 16.03.2016 13:36

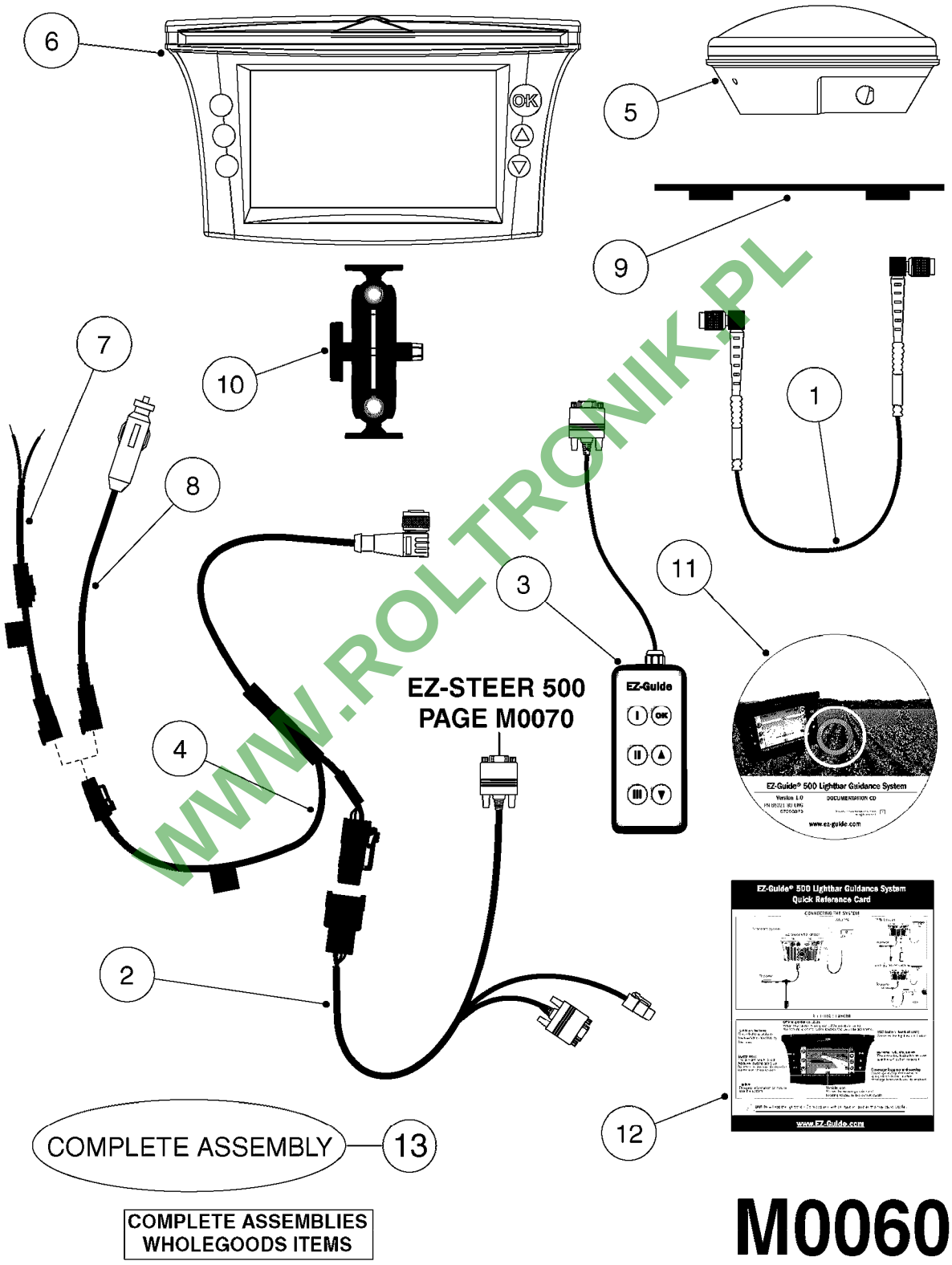

WWW.ROLTRONIK.PL

EZ-GUIDE 500 LIGHTBAR
M0060-HIN, 01:01:16

Pos.	parts-n°	order qty	description
1	26007603	1	CABLE, ANTENNA, EZGUIDEPLUS
2	26012203	1	EZ-STEER/GUIDE 500 ADAPT.CABLE
3	26015303	1	REMOTE KEYPAD EZGUIDE 500/250
3	28048403	1	DECAL - REMOTE OVERLAY 500/250
4	26015403	1	EZ-GUIDE 500 CABLE POWER/CAN90
5	26015503	1	EZ-GUIDE 500 Z PLUS ANTENNA
5	26015603	1	ANTENNA AG15 L1,EZ GDE 500/250
6	26015703	1	EZ-GUIDE 500 DGPS DISPLAY
6	26015803	1	EZ-GUIDE 500 OMNISTAR DISPLAY
7	26016103	1	EZ-GUIDE 500 CABLE UNTERM.FUSE
8	26016203	1	EZ-GUIDE 500 POWER CONN.CABLE
9	28048203	1	EZ-GUIDE 500 MOUNT F.AG15 ANT.
10	28048303	1	EZ-GUIDE 250/500 RAM MNT.1.5"
11	29003803	1	EZ-GUIDE 500 CD,GET.STARTED V1
12	67215403	1	EZ-GUIDE 500 QUICK REF.CARD V1
13	84208303	1	EZ GUIDE 500 LIGHTBAR (DGPS)
13	84208403	1	EZ GUIDE 500 LIGHTBAR (XP/HP)
13	84208503	1	EZ GUIDE 500 LIGHTBAR (RTK)

WWW.ROLTRONIK.PL

EZ-STEER 500 STEERING SYSTEM
M0070-HIN, 01:01:16

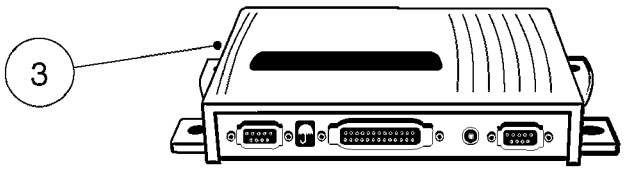

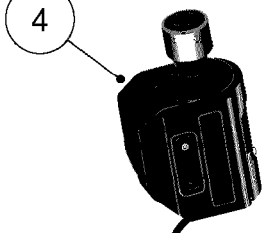

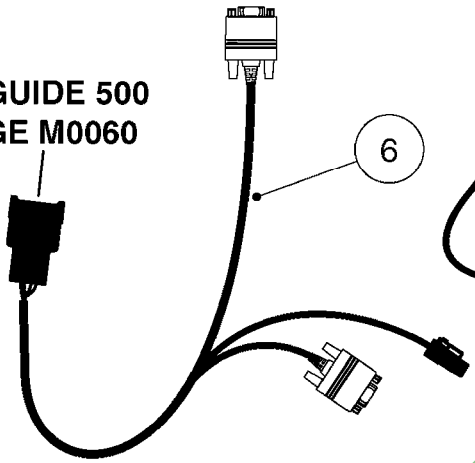

EZ-GUIDE 500
PAGE M0060

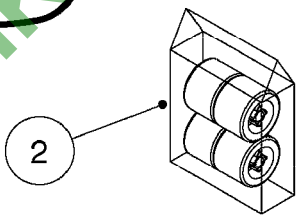

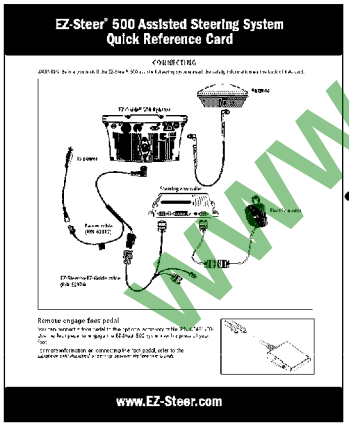

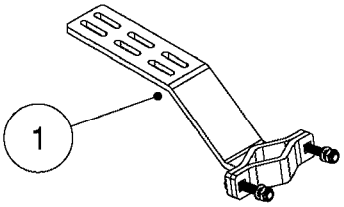

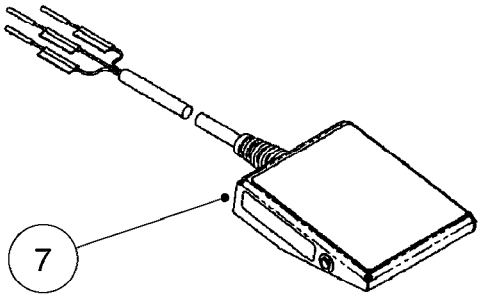

COMPLETE ASSEMBLY

COMPLETE ASSEMBLIES
WHOLEGOODS ITEMS

M0070

WWW.ROLTRONIK.PL

Pos.	parts-n°	order qty	description
1	26008803	1	EZ-STR.BKT-JD 4000,8000 4WD
1	26008903	1	EZ-STR.BKT-JD80002WD,7X20,9000
1	26009003	1	EZ-STR.BKT-CASE IH 7100/7200
1	26009103	1	EZ-STR.BKT-JD COMBINE&ROGATOR
1	26009203	1	EZ-STR.BKT-JD 6000,7000
1	26009303	1	EZ-STR.BKT-BUHLER,NH VERSATILE
1	26009403	1	EZ-STR.BKT-STEIGER,NH VERSATIL
1	26009503	1	EZ-STR.BKT-INTERNATIONAL TRUCK
1	26009603	1	EZ-STR.BKT-AGCHEM TERRAGATOR
1	26009703	1	EZ-STR.BKT-CASE IH MXM
1	28036903	1	EZ-STR.BKT-CASE IH COMB.1600
1	28037003	1	EZ-STR.BKT-JD 89XX,71XX,72XX
1	28037103	1	EZ-STR.BKT-JD 8000/9000
1	28037203	1	EZ-STR.T2 TERRAIN COMP.UPDATE
1	28037303	1	EZ-STR.BKT-SPR.COUPE 3000/4000
1	28038203	1	EZ-STR.BKT-FENDT 924
1	28046503	1	EZ-STR.BKT-AGCO DT/RT,MF64/74
1	28047803	1	EZ-STR.BKT.-NH TVT,CASE IH CVX
1	28050203	1	EZ-STR.BKT-CASE JX(U),NH TL(A)
1	28055203	1	EZ-STR.BKT-CASE MXM/N.HOLLAND
1	28055903	1	EZ-STR.BKT-WILMAR EAGLE
2	26009803	1	EZ-STEER FOAM WHEELS 4-PK
3	26009903	1	EZ-STEER CONTROLLER
4	26010003	1	EZ-STEER MOTOR KIT
5	26010203	1	EZ-STEER MOTOR CABLE 3M
6	26012203	1	EZ-STEER/GUIDE 500 ADAPT.CABLE
7	26012503	1	EZ-STR.FOOT SWITCH & ACC.CABLE
8	67214803	1	EZ-STR.REF.GUIDE V3 SPARE
8	67214903	1	EZ-STEER QUICK REF.CARD V3
8	67215203	1	EZ-STEER 500 QUICK REF.CARD V1
8	67215303	1	MANUAL EZ-STEER 500 REF V1
9	84208603	1	EZ-STEER 500/250 SYS. COMPLETE

WWW.PODTRAK.PL

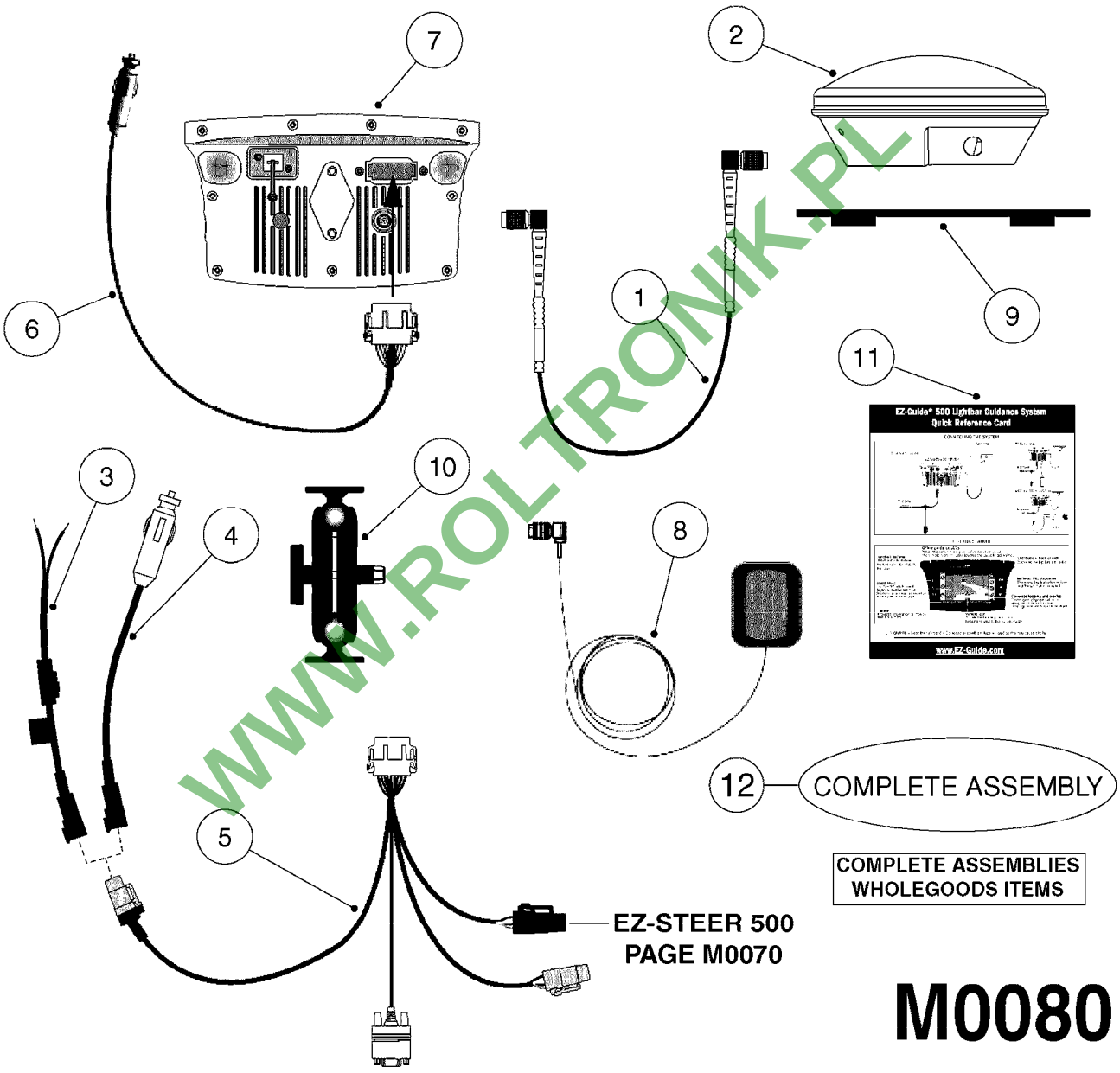

COMPLETE ASSEMBLIES
WHOLEGOODS ITEMS

M0080

WWW.ROLTRONIK.PL

EZ-GUIDE 250 LIGHTBAR
M0080-HIN, 01:01:16

Date 16.03.2016 13:36

Pos.	parts-n°	order qty	description
1	26007603	1	CABLE, ANTENNA, EZGUIDEPLUS
2	26015603	1	ANTENNA AG15 L1,EZ GDE 500/250
3	26016103	1	EZ-GUIDE 500 CABLE UNTERM.FUSE
4	26016203	1	EZ-GUIDE 500 POWER CONN.CABLE
5	26017303	1	EZ-GUIDE 250 ALL PORT CABLE
6	26017703	1	EZ-GUIDE 250 POWER CABLE
7	26017803	1	EZ-GUIDE 250 LIGHTBAR DISPLAY
8	26017903	1	EZ-GUIDE 250 PATCH ANTENNA
9	28048203	1	EZ-GUIDE 500 MOUNT F.AG15 ANT.
10	28048303	1	EZ-GUIDE 250/500 RAM MNT.1.5"
11	67217403	1	EZ-GUIDE 250 QUICK REF.CARD
12	84210603	1	EZ GUIDE 250 LIGHTBAR

WWW.ROLTRONIK.PL

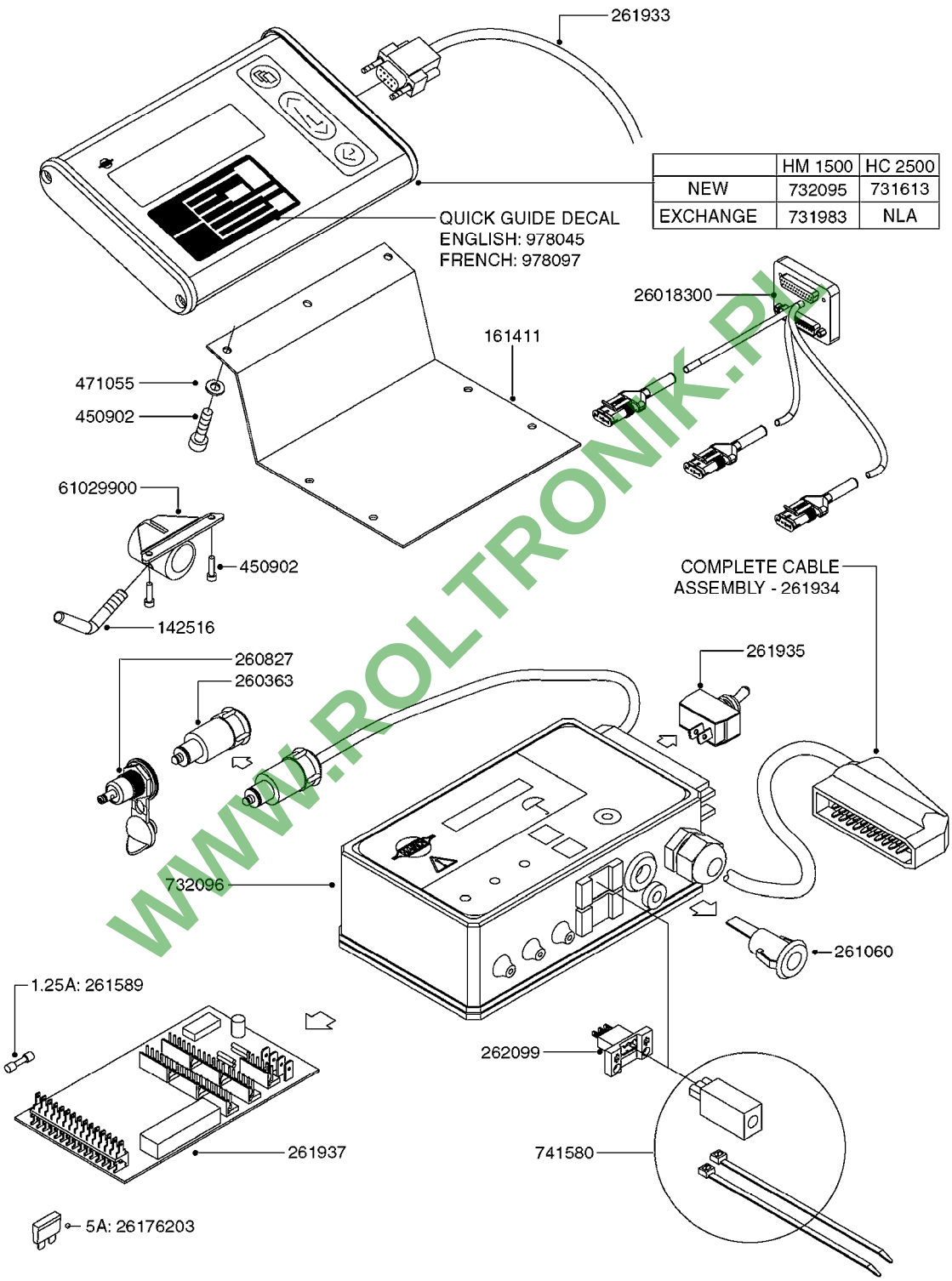

	HM 1500	HC 2500
NEW	732095	731613
EXCHANGE	731983	NLA

WWW.ROLTRONIK.PL

M0090

parts-n°	order qty	description
142516	1	SCREW SET M10 BENT F. LOCKING
161411	1	MT.BRK. HC2500/HM1500 DISPLAY
26018300	1	ADAPTOR 2500 FOR SPRAYBOX II 39-PIN/REPLACES SCANBOX
260363	1	PLUG 2 POLE 12V
260827	1	PLUG F.EC ATTACHMENTS
261060	1	PLUG F.EC ATTACHMENTS
261589	1	FUSE 5 X 20 1.25 AMP
26176203	1	FUSE 5.0A QUICK-ACT.
261933	1	CABLE W/PLUG 2X25 L=71"
261934	1	CABLE W/PLUG 18X0.5MM L=79"
261935	1	SWITCH 2 POLE
261937	1	CIRCUIT BOARD F. SCANBOX
262099	1	PLUG SOCKET 3-POLE 2.5/3
450902	1	BOLT ALLEN HEAD M4 X 16MM
471055	1	WASHER D4.1/7.6 X 0.9
61029900	1	BRACKET FOR HC2500
731613	1	DISPLAY HC2500 NEW
731983	1	DISPLAY HM1500 REFURBISHED
732095	1	DISPLAY HM1500 NEW
732096	1	SCANBOX F.HM1500/HC2500
741580	1	PLUG 3-POLE 2.5/3
978045	1	DECAL QUICK GUIDE 1500/2500
978097	1	DECAL QUICK GUIDE 1500/2500 FR

WWW.ROLTRONIK.PL

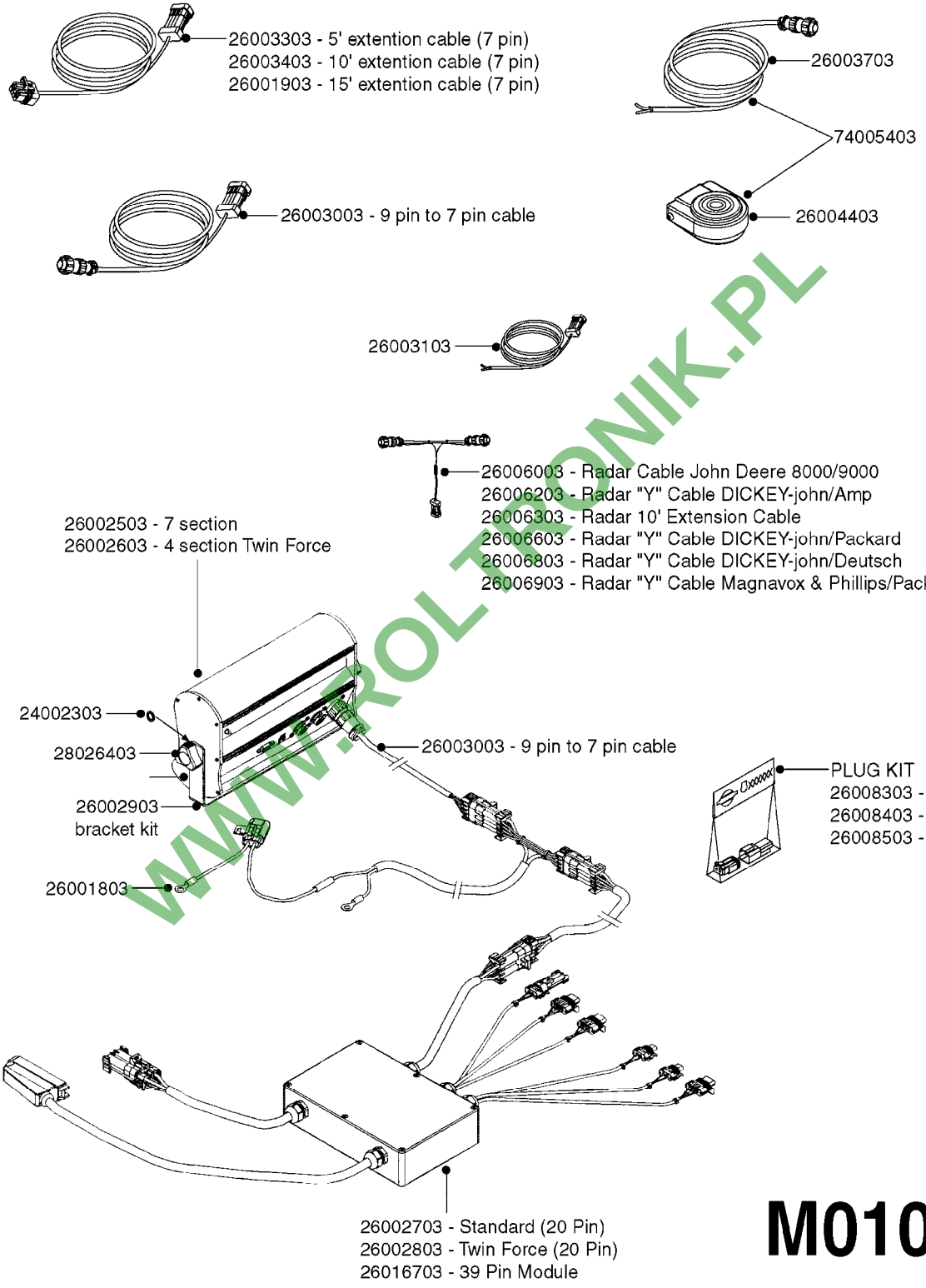

WWW.ROLTRONIK.PL

M0100

MUSTANG 3500 CONTROLLER
M0100-HIN, 01:01:16

parts-n°	order qty	description
24002303	1	WASHER, RUBBER
26001803	1	POWER CABLE
26001903	1	15' 7-PIN EXTENSION CABLE
26002503	1	MUSTANG 3500/7 CONSOLE
26002603	1	MUSTANG 3500/4/TF CONSOLE
26002703	1	MUSTANG 3500/20PIN SC MODULE
26002803	1	MUSTANG 3500/20PIN TF SC MODUL
26002903	1	MUSTANG 3500 CONSOLE MNT KIT
26003003	1	MUSTANG 3500 CONSOLE CABLE
26003103	1	MUSTANG 3500/7 SC MOD CNECT KT
26003303	1	MUSTANG/FM 5FT 7PIN EXT CABLE
26003403	1	MUSTANG/FM 10FT 7PIN EXT CABLE
26003703	1	MUSTANG RUN/HOLD ADAPT CABLE
26004403	1	SWITCH, FOOT
26006003	1	MUSTANG RADR CBLE JD 8000/9000
26006203	1	MUSTANG RDR "Y" CABLE DCKY-JHN
26006303	1	MUSTANG RDR EXTNSN CABLE 10FT
26006603	1	MUSTANG RDR"Y"CABLE D-J PACKRD
26006803	1	MUSTANG RDR"Y"CABLE D-J DEUTS.
26006903	1	MUSTANG RDR"Y"CABLE MAG.PHILIP
26008303	1	MICRO TRAK PLUG KIT - 2 PIN
26008403	1	MICRO TRAK PLUG KIT - 3 PIN
26008503	1	MICRO TRAK PLUG KIT - 7 PIN
26016703	1	MUSTANG 3500/39PIN SC MODULE
28026403	1	KNOB, MUSTANG CONSOLE MOUNT
74005403	1	FOOT SWITCH FOR MUSTANG 3500

WWW.ROL-TRONIK.PL

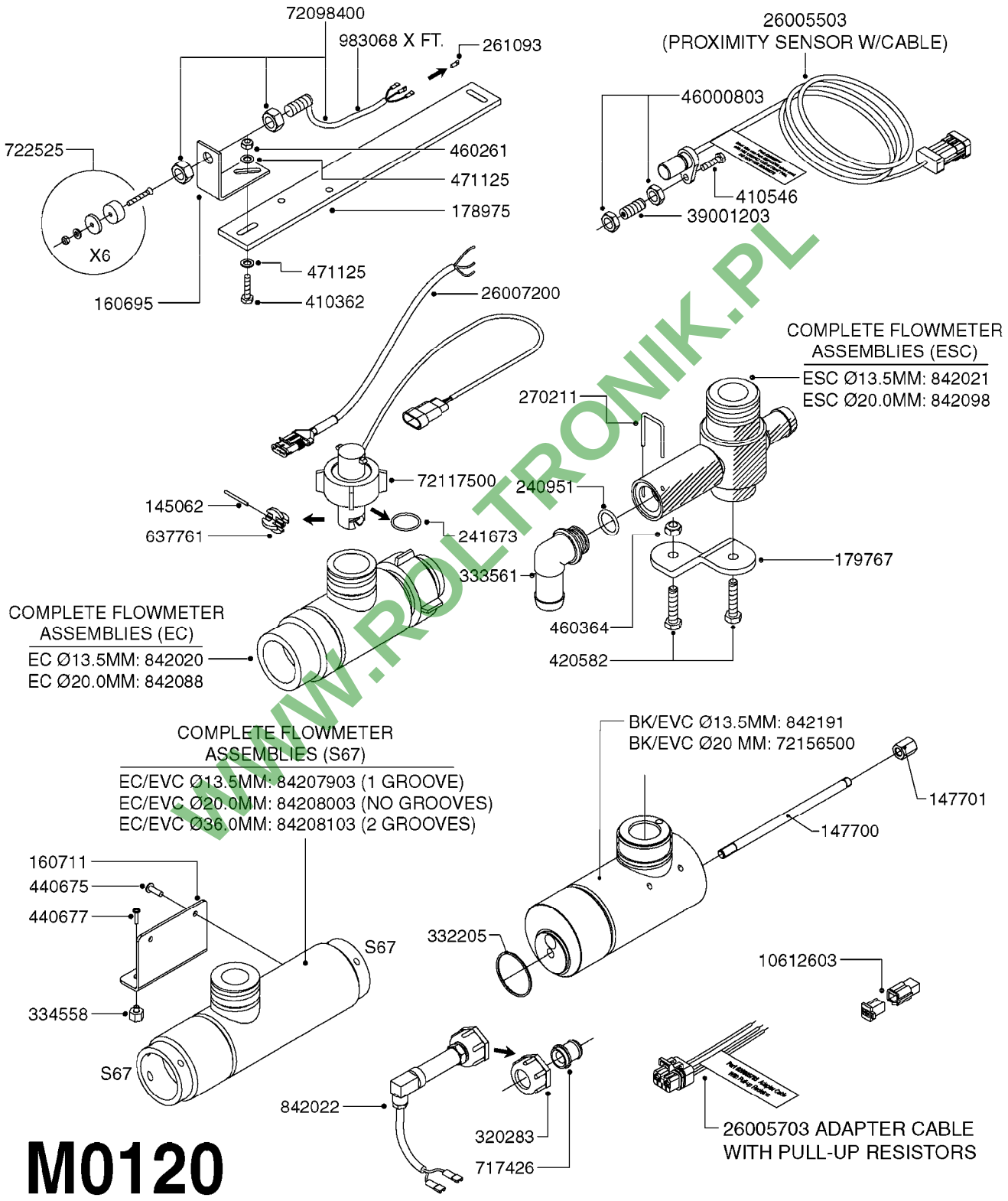

WWW.ROLTRONIK.PL

parts-nº	order qty	description
145062	1	ROTOR SHAFT
147700	1	STUD BOLT M8 X 158MM
147701	1	NUT HEX M8 STAINLESS L=16
160695	1	BRACKET F.SENSOR
160711	1	BRACKET FOR FLOW METER
178975	1	MOUNT BRACKET F. SPEED SENSOR
179767	1	FLOW SENSOR MOUNTING BRACKET
240951	1	O-RING D21.2X3 NITRIL
241673	1	O-RING D22.1X1.6
261093	1	SPADE F.ELEC.WIRE DK 2.8X0.8
270211	1	FITT.DK S25 FORK L=37.5
320283	1	FITT.DK NUT 3/4"BSP
332205	1	O-RING D43/39XD2
333561	1	FITT.DK ELB.1" EC RETURN
334558	1	NUT HEX PLASTIC INSERT
410362	1	BOLT HEX 8.8 SS M6X20 FT
410546	1	BOLT HEX SS M6X12 FT
420582	1	BOLT HEX 8.8 DEL M8X20 FT A2
440675	1	SCREW F. PLASTIC 5X16 SS
440677	1	SCREW F. PLASTIC 5X20 SS
460261	1	NUT HEX M6X1 LOCK A2 DIN985
460364	1	NUT HEX M8 GALV.
471125	1	WASHER, M6, Ø12/ 6.4X 1.6, SS
637761	1	ROTOR F.FLOWMETER - PILOT
717426	1	FITT.DK REDUC 1/4"BSP F.3/4"N
722525	1	MONITOR MAGNETS SET OF 8PCS
842020	1	HP FLOW METER EC 2-30 GPM
842021	1	HP FLOW METER ESC 2-30 GPM
842022	1	HP PRESS. TRANSDUCER 0-150 PSI
842088	1	HP FLOW METER EC 4-70 GPM
842098	1	HP FLOW METER ESC 4-70 GPM
842191	1	HP FLOW METER BK/EVC 2-30 GPM
983068	1	ELEC. CABLE 3 WIRE X .25MM HP
10612603	1	KIT PLUG 6 PIN F.PILOT MONITOR
26005503	1	SPEED SENSOR/CABLE ASSY PROX
26005703	1	*SPEED SENS ADPT CBLE W PULLUP
26007200	1	CABLE L =13.00M, AMP, MALE, 3P
39001203	1	THREAD PLST 1/2-13UNCXM6X1L=1"
46000803	1	NUT, 1/2-13 THIN
72098400	1	SPEED SENSOR W/CABLE 10000MM
72117500	1	FLOW SENSOR - M.AMP L=1M
72156500	1	HP FLOW METER PIN 4-70 GPM 20Ø
84207903	1	FLOW METER,2-30 GPM,S67,CAL
84208003	1	FLOW METER,4-70 GPM,S67,CAL
84208103	1	FLOW METER,20-160 GPM,S67,CAL

WWW.PO-TRONIK.PL

HARDI	**Agroparts: www.HARDI-INTERNATIONAL.com**	
	TRAFFIC LIGHT KIT M0160-HIN, 01:01:16	Page 0 Date 16.03.2016 13:36

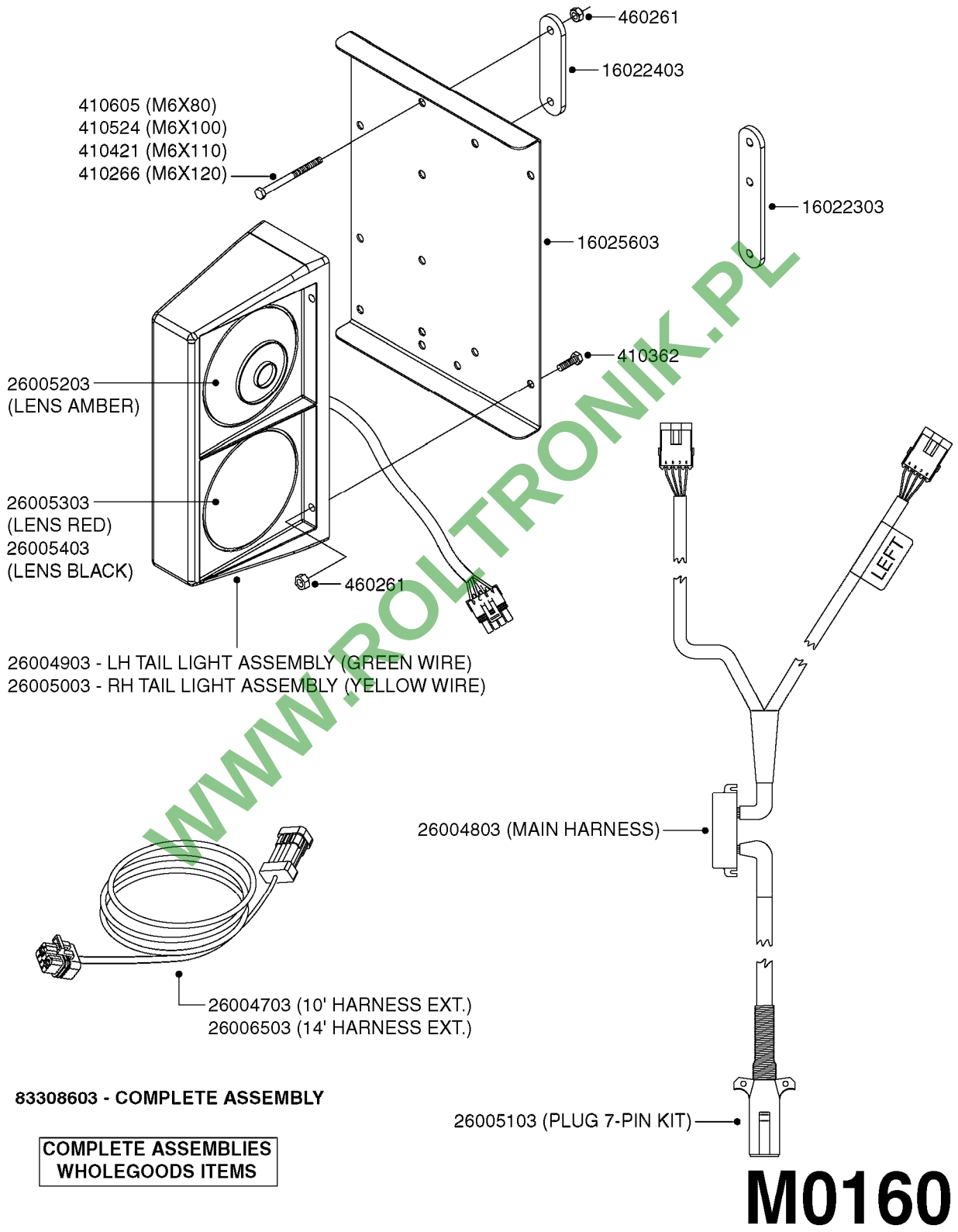

83308603 - COMPLETE ASSEMBLY

COMPLETE ASSEMBLIES WHOLEGOODS ITEMS

M0160

WWW.ROLTRONIK.PL

TRAFFIC LIGHT KIT
M0160-HIN, 01:01:16

Date 16.03.2016 13:36

parts-n°	order qty	description
410266	1	BOLT HEX 8.8 DEL M6X120
410362	1	BOLT HEX 8.8 SS M6X20 FT
410421	1	BOLT HEX M6X110 DIN931-A2 SS
410524	1	BOLT HEX 8.8 DEL M6X100
410605	1	BOLT HEX 8.8 DEL M6X80
460261	1	NUT HEX M6X1 LOCK A2 DIN985
16022303	1	BRACKET 100MM TUBE
16022403	1	BRACKET 60MM TUBE
16025603	1	BRACKET TAIL LIGHT DUAL LAMP
26004703	1	HARNESS 13' EXT 4 WIRE WP
26004803	1	HARNESS MAIN TAIL LIGHT
26004903	1	TAIL LIGHT GREEN WIRE LH
26005003	1	TAIL LIGHT YELLOW WIRE RH
26005103	1	PLUG 7-PIN AG TAIL LIGHT
26005203	1	LENS AMBER BEFORE 2009
26005303	1	LENS RED BEFORE 2009
26005403	1	LENS BLACK BEFORE 2009
26006503	1	HARNESS 14' EXT 4 WIRE WP
83308603	1	TRAFFIC LIGHT KIT

WWW.ROLTRONIK.PL

HARDI	**Agroparts: www.HARDI-INTERNATIONAL.com**	
	SPRAYBOX II M0200-HIN, 01:01:16	Page 0 Date 16.03.2016 13:36

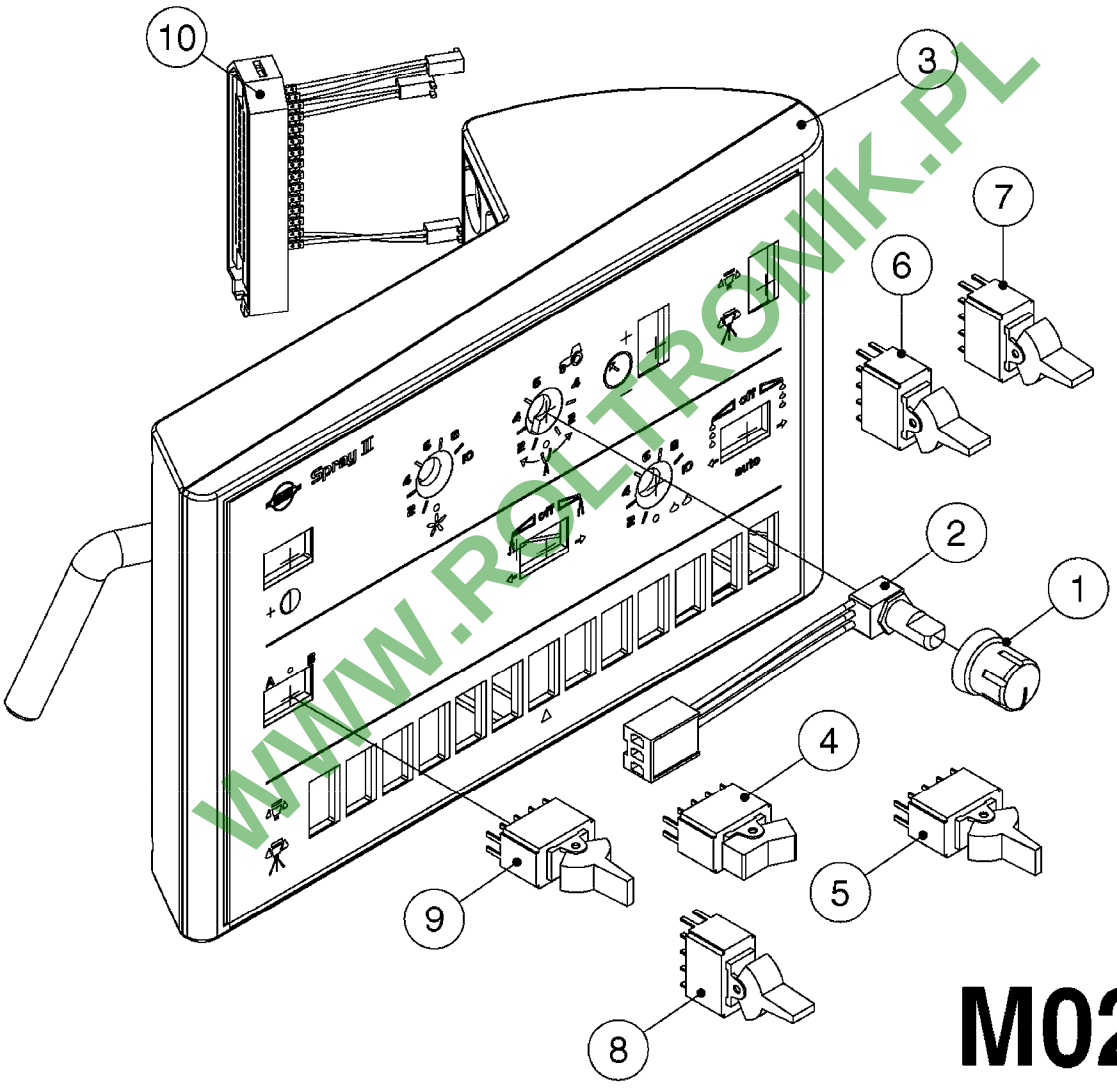

WWW.ROLTRONIK.PL

M0200

SPRAYBOX II
M0200-HIN, 01:01:16

Date 16.03.2016 13:36

Pos.	parts-n°	order qty	description
1	26000400	1	KNOB F.FOAM ADJUST HC5500
2	26005300	1	POT.METER F. SPRAYBOX II
3	26010200	1	CONTROL BOX 2SEC, SPRAY BOX II
3	26010300	1	CONTROL BOX 3SEC, SPRAY BOX II
3	26010400	1	CONTROL BOX 4SEC, SPRAY BOX II
3	26010500	1	CONTROL BOX 5SEC, SPRAY BOX II
3	26010600	1	CONTROL BOX 6SEC, SPRAY BOX II
3	26010700	1	CONTROL BOX 7SEC, SPRAY BOX II
3	26010800	1	CONTROL BOX 8SEC, SPRAY BOX II
3	26010900	1	CONTROL BOX 9SEC, SPRAYBOX II
3	26011000	1	SPRAY CONT. II EVC 4 SEC. HAZ
3	26011100	1	SPRAY CONT. II EVC 5 SEC. HAZ
3	26011200	1	SPRAY CONT. II EVC 6 SEC. HAZ
3	26011300	1	SPRAY CONT. II EVC 7 SEC. HAZ
3	26013600	1	CONTROL BOX 13SEC, SPRAYBOX II
4	26020200	1	SWITCH ON-ON SP ROCKER RED
5	26020300	1	SWITCH ON-OFF-ON SP BLACK
6	26020400	1	SWITCH MOM-OFF-MOM SP YELLOW
7	26020600	1	SWITCH ON-ON SP GREEN
8	26020800	1	SWITCH ON-ON DP GREEN
9	26021000	1	SWITCH ON-OFF-ON DP BLACK
10	28031400	1	PLUG 39-POLE FEMALE HC5500

WWW.ROLTROWK.PL

HARDI	**Agroparts: www.HARDI-INTERNATIONAL.com**	
	JUNCTION BOX - LIQUID M0230-HIN, 01:01:16	Page 0 Date 16.03.2016 13:36

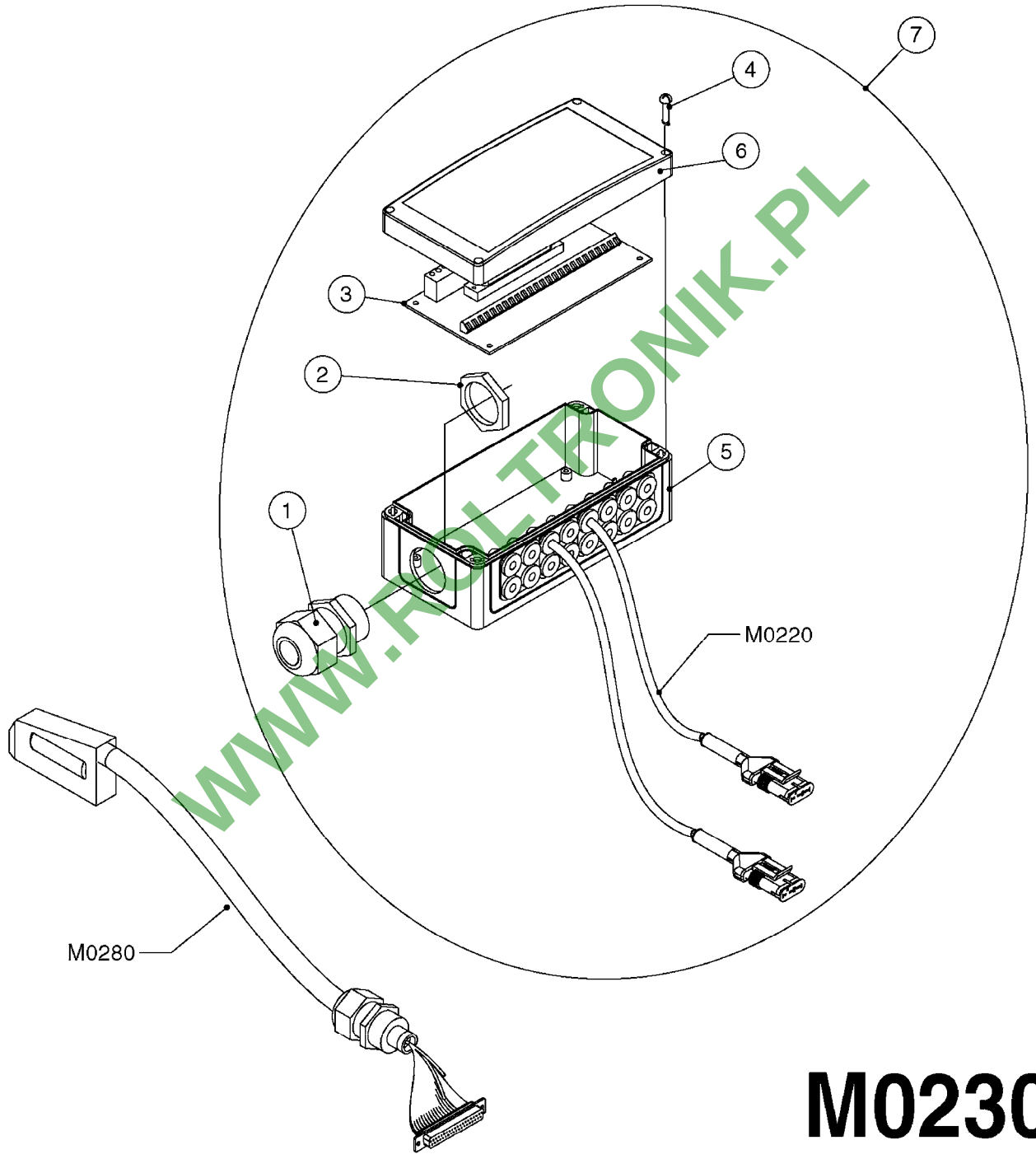

WWW.ROLTRONIK.PL

M0230

JUNCTION BOX - LIQUID
M0230-HIN, 01:01:16

Date 16.03.2016 13:36

Pos.	parts-n°	order qty	description
1	262106	1	BULKHEAD F. CABLE 6.5-14 BLACK
2	262107	1	NUT F. BULKHEAD CABLE BLACK
3	26004800	1	CIRCUIT BD SEC VLV NCM 13SEC 13 SECTION
3	72173900	1	CIRCUIT BD SEC VLV 39PIN 9SEC 9 SECTION
4	28082100	1	SCREW F. BOX LID 1/4" L=20
5	33508700	1	BOX BOTTOM 160X80X40 BLACK 1-HOLE
6	33508800	1	LID 160X80X15 BLK W/SCREWS
7	72115400	1	CONNECTION BOX F. OP. UNIT SV9

WWW.ROLTRONIK.PL

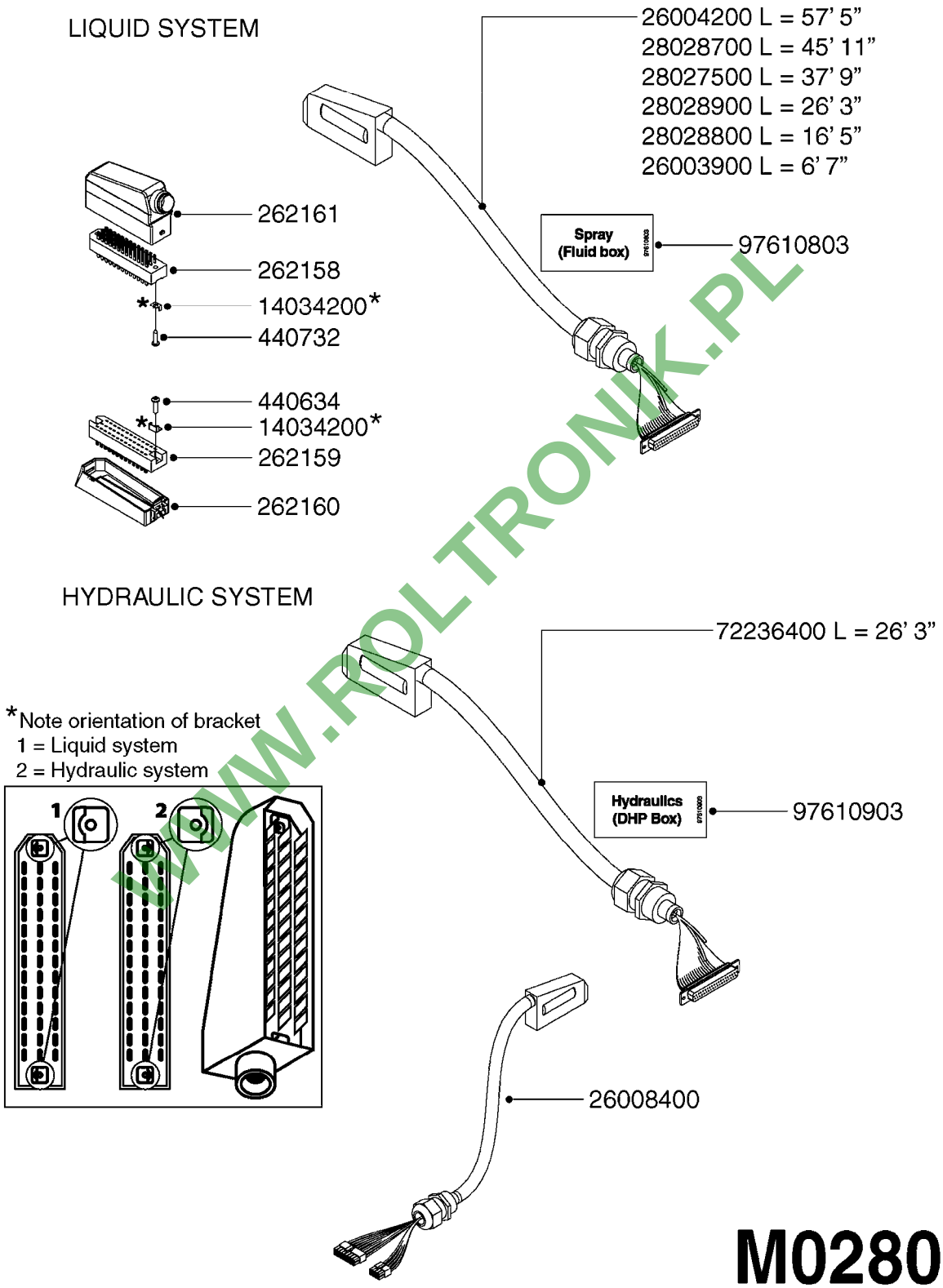

WWW.ROLTRONIK.PL

M0280

39 PIN CABLES
M0280-HIN, 01:01:16

parts-n°	order qty	description
262158	1	PLUG INSERT 39 POLE MALE
262159	1	PLUG INSERT 39 POLE FEMALE
262160	1	PLUG HOUSING 39 POLE FEMALE
262161	1	PLUG HOUSING F/39 POLE MALE
440634	1	SCREW 5/8"
440732	1	PT SCREW 35X12B Z5452 ELZ
14034200	1	CODE BRACKET FOR 39 PIN CABLE
26003900	1	WIRE 37-39 PIN EVC, 6.6'
26004200	1	WIRE 37-39 PIN EVC, 57.4'
26008400	1	WIRE 39-PIN 24 WIRE L=8M
28027500	1	WIRE 37-39 PIN EVC, 37.7'
28028700	1	WIRE 37-39 PIN EVC, 45.9'
28028800	1	WIRE 37-39 PIN EVC, 16.4'
28028900	1	WIRE 37-39 PIN EVC, 26.2'
72236400	1	DAH CONN. WIRE/TRACTOR L=8M
97610803	1	DECAL-SRAY BOX 39-PIN
97610903	1	DECAL-HYDRAULIC BOX 39-PIN

WWW.ROLTRONIK.PL

NORAC UC4 BOOM HEIGHT CONTROL
M0290-HIN, 01:01:16

Page 0

Date 16.03.2016 13:36

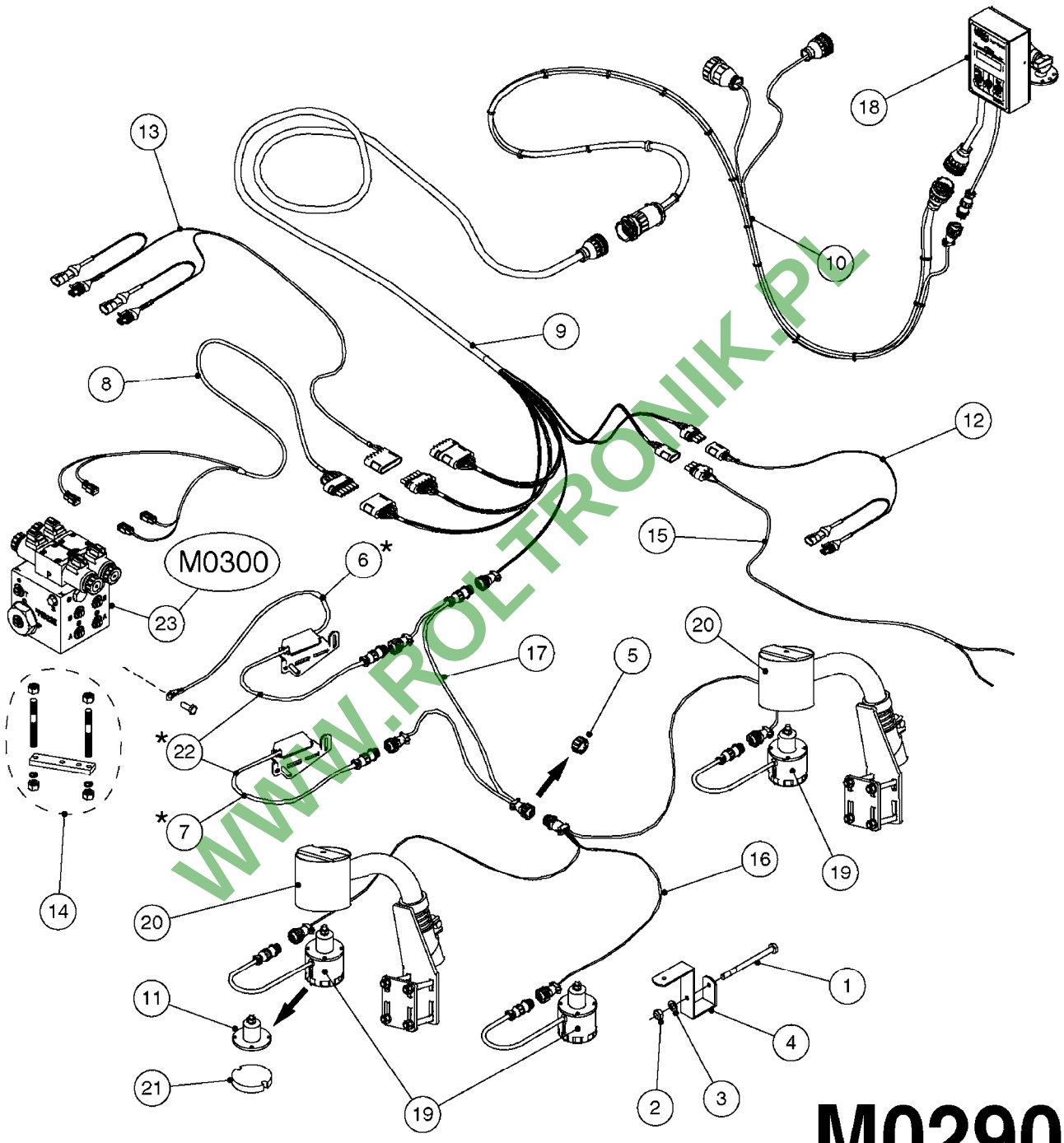

WWW.ROLTRONIK.PL

M0290

*CANNOT MIX OLD AND NEW STYLE ROLL SENSORS!

If replacing Norac P/N 44641 or 44642, must use pair of new style sensors (22).
Only new style sensors sold separately; (6) (Norac P/N 45000), (7) (Norac P/N 45001).
If unsure, pair of new style sensors works with all versions of UC4.

NORAC UC4 BOOM HEIGHT CONTROL
M0290-HIN, 01:01:16

Pos.	parts-n°	order qty	description
1	410443	1	BOLT HEX 8.8 DEL M6X70
1	410605	1	BOLT HEX 8.8 DEL M6X80 SPB/SPC BOOM
2	460261	1	NUT HEX M6X1 LOCK A2 DIN985
3	471124	1	WASHER, M6, Ø18/ 6.4X 1.6, SS
4	16128603	1	BRACKET F. SENSOR 60X60 TUBE SPB/SPC BOOM
4	16128703	1	BRACKET F. SENSOR 50x50 TUBE FORCE BOOM (FTZ)
5	26016303	1	CONNECTOR RING CPC #11 NORAC
6	26025903	1	NORAC UC4+ ROLL SENSOR W/TEMP. CONFIRM NORAC P/N 45000
7	26026003	1	NORAC UC4+ ROLL SENSOR CONFIRM NORAC P/N 45001
8	26026600	1	NORAC CABLE VAR.RT.VLV DIN 3-PIN CONNECTORS/HIRSCHMAN
8	28055603	1	NORAC CABLE VAR.RT.VLV DEUTSCH 2-PIN CONNECTORS/DEUTSCH
9	28049503	1	NORAC CABLE EXTENSION
10	28049603	1	NORAC POWER CABLE
11	28050303	1	NORAC RUBBER TOP&BOLT F.SENSOR
12	28050703	1	NORAC UC4+ OPEN CTR. CABLE
13	28054303	1	PARALIFT INTERFACE CABLE NORAC
14	28055503	1	NORAC VALVE MOUNTING HARDWARE
15	28055703	1	NORAC VALVE CABLE ROLL PIGTAIL
16	28085900	1	SENSOR BRANCH CABLE NORAC
17	28086200	1	CAN NODE DUAL CABLE NORAC
18	28086300	1	UC4 DISPLAY PANEL NORAC
19	28086400	1	UC4 ULTRASOUND SENSOR NORAC
20	28086500	1	UC4 SENSOR MOUNTING BKT. NORAC
21	28086600	1	FOAM DISC F. SENSOR NORAC
22	70112503	1	UC4+ ROLL SENSOR KIT '11 HIN INCLUDES NORAC P/N 45000 & 45001
23	78216100	1	NORAC VALVE BLOCK COMP, DEUTSCH CON.

WWW.PO-TRONIK.PL

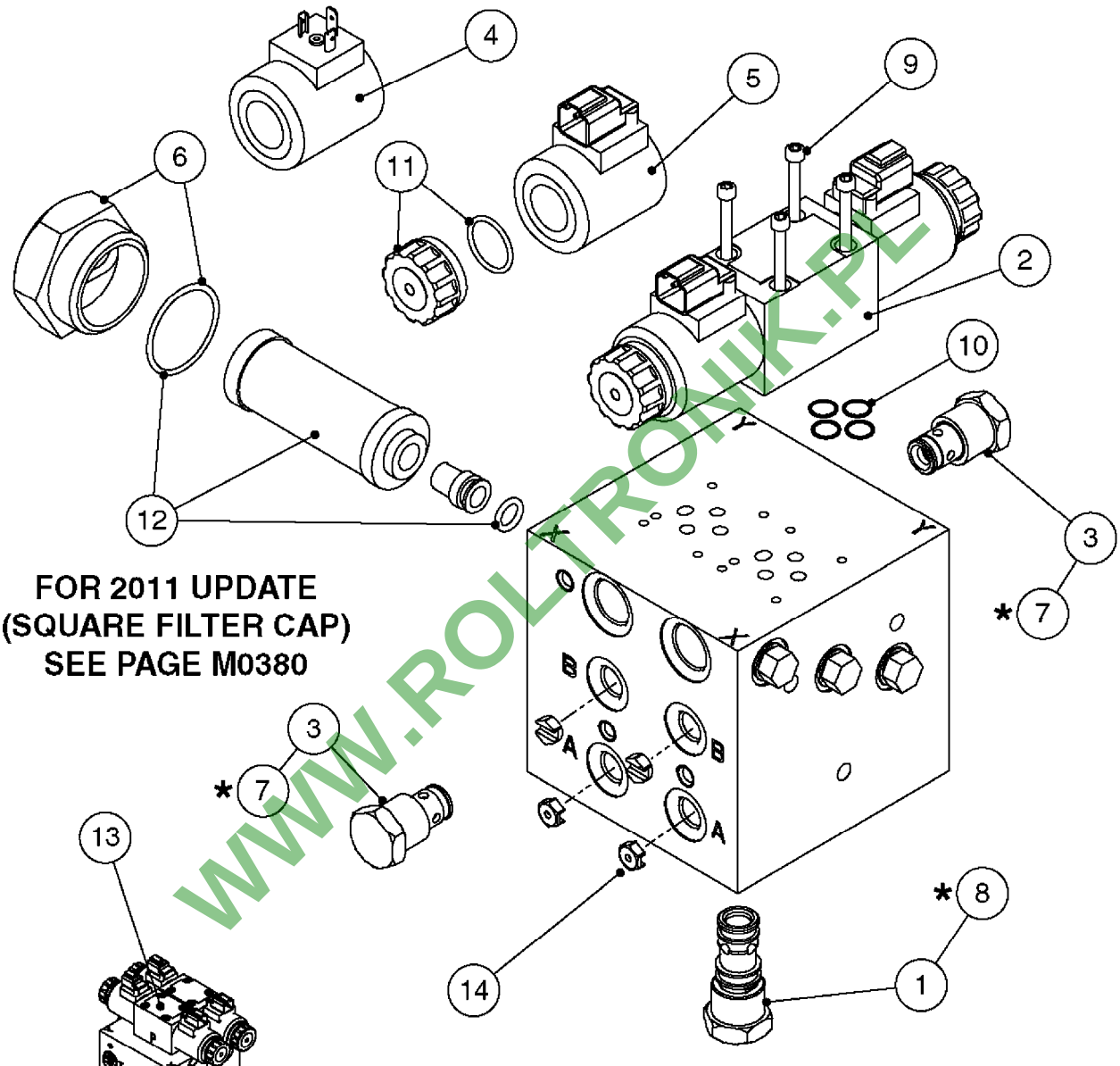

FOR 2011 UPDATE
(SQUARE FILTER CAP)
SEE PAGE M0380

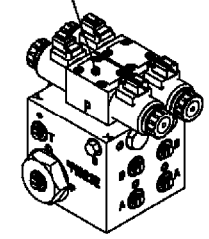

COMPLETE
ASSEMBLY

*SEAL KITS

M0300

WWW.ROLTRONIK.PL

NORAC VARIABLE RATE VALVE UC4
M0300-HIN, 01:01:16

Pos.	parts-n°	order qty	description
1	28048803	1	NORAC CHECK VALVE
2	28048903	1	NORAC PROP VALVE 3-PIN CONNECTORS/HIRSCHMAN
2	28055803	1	NORAC SOLENOID - DEUTSCH CONN. 2-PIN CONNECTORS/DEUTSCH
3	28049403	1	NORAC CHECK VALVE
4	28056403	1	COIL, NORAC, PROP, DIN
5	28056503	1	COIL, NORAC, PROP, DEUTSCH
6	28066803	1	NORAC FILTER CAP W/O-RING
7	28066903	1	NORAC SEAL KIT F.28049403
8	28067003	1	NORAC SEAL KIT F.28048803
9	28068103	1	NORAC HEX CAPSCREW 10-24X2 SS
10	28068203	1	NORAC O-RING F.SOLENOID VALVE
11	28074903	1	NORAC COIL NUT AND O-RING
12	75076900	1	NORAC FILTER ELEMENT KIT
13	78216100	1	NORAC VALVE BLOCK COMP, DEUTSCH CON. COMPLETE W/2-PIN DEUTSCH SOLENOIDS
14	78603300	1	NORAC ONE WAY ORIFICE, .047"

WWW.ROLTRONIK.PL

	Agroparts: www.HARDI-INTERNATIONAL.com	
HARDI	NORAC SEVERE TERRAIN KIT M0360-HIN, 01:01:16	Page 0 Date 16.03.2016 13:36

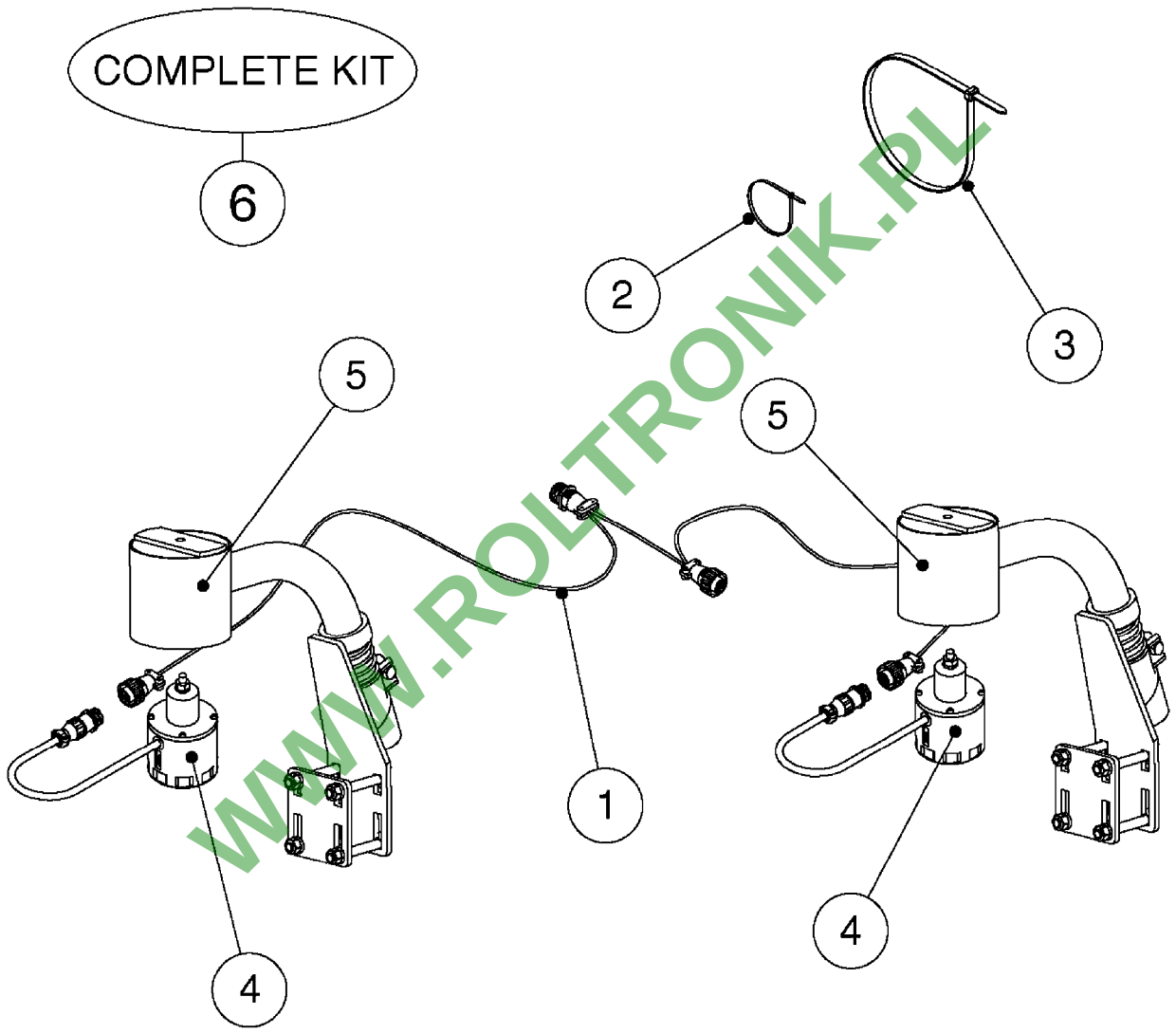

WWW.ROLTRONIK.PL

M0360

NORAC SEVERE TERRAIN KIT
M0360-HIN, 01:01:16

Pos.	parts-n°	order qty	description
1	26030300	1	NORAC SEVERE TERRAIN CABLE
2	28024103	1	TIE STRAP L=8" x W=3/16"
3	28025203	1	TIE STRAP L=23" x W=1/2"
4	28086400	1	UC4 ULTRASOUND SENSOR NORAC
5	28086500	1	UC4 SENSOR MOUNTING BKT. NORAC
6	72591600	1	NORAC HC SEVERE TERRAIN KIT

WWW.ROLTRONIK.PL

HARDI	**Agroparts: www.HARDI-INTERNATIONAL.com**	
	NORAC UC5 BOOM HEIGHT CONTROL M0370-HIN, 01:01:16	Page 0 Date 16.03.2016 13:36

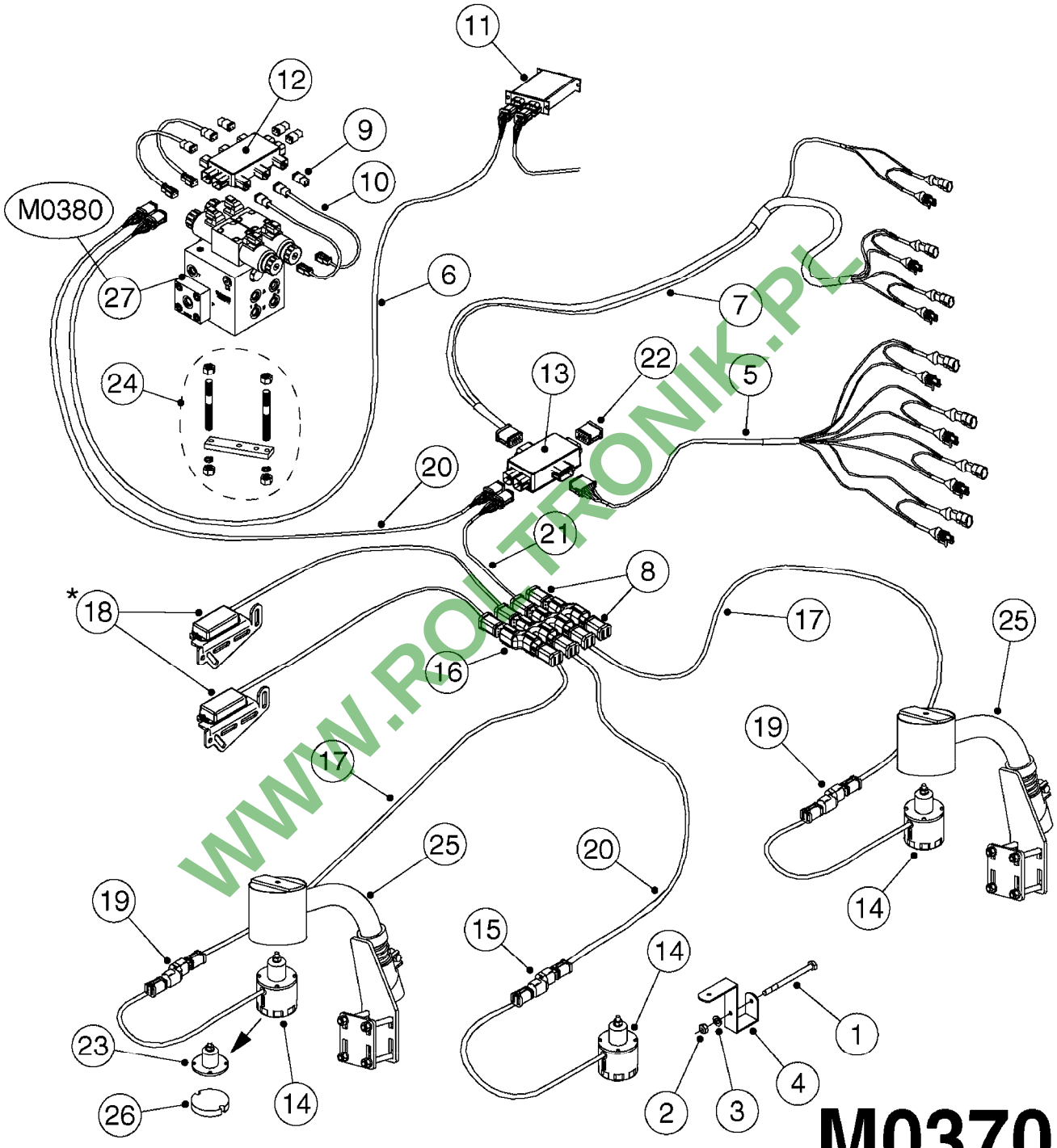

WWW.ROLTRONIK.PL

M0370

*CANNOT MIX OLD AND NEW STYLE ROLL SENSORS!

If replacing Norac P/N 43740, must replace both roll sensors with new style (18).
If unsure, new style (Norac P/N 43741) works with all versions of UC5.

NORAC UC5 BOOM HEIGHT CONTROL
M0370-HIN, 01:01:16

Pos.	parts-n°	order qty	description
1	410443	1	BOLT HEX 8.8 DEL M6X70 FORCE BOOM (FTZ)
1	410605	1	BOLT HEX 8.8 DEL M6X80 SPB/SPC BOOM
2	460261	1	NUT HEX M6X1 LOCK A2 DIN985
3	471124	1	WASHER, M6, Ø18/ 6.4X 1.6, SS
4	16128603	1	BRACKET F. SENSOR 60X60 TUBE SPB/SPC BOOM
4	16128703	1	BRACKET F. SENSOR 50x50 TUBE FORCE BOOM (FTZ)
5	26022703	1	CABLE,INTERFACE,TILT,NORAC UC5
6	26022903	1	CABLE UC5 NETWORK 14 AWG 10M
7	26023503	1	CABLE UC5 INTERFACE MAIN AMP
8	26024403	1	NORAC UC5 NETWORK 6-PIN PLUG
9	26043000	1	NORAC UC5 NETWORK 2 PIN PLUG
10	26043300	1	CABLE UC5 VALVE 2PIN/2PIN DT
11	26043400	1	NORAC UC5 CONTROLLER MODULE
12	26043500	1	NORAC UC5 VALVE MODULE
13	26043600	1	MODULE, INPUT, NORAC UC5
14	26043700	1	SENSOR, NORAC, UC5, ULTRASONIC
15	26043800	1	NORAC UC5 NETWORK COUPLER 2-WAY
16	26043900	1	NORAC UC5 NETWORK COUPLER 8-WAY
17	26044200	1	CABLE UC5 NETWORK 18 AWG 20M
18	26044300	1	NORAC UC5 ROLL SENSOR NEW STYLE NORAC P/N 43741
19	26044400	1	NORAC UC5 COUPLER 2-WAY/TERM.
20	26047100	1	CABLE UC5 NETWORK 14 AWG 1M
21	26049900	1	CABLE UC5 NETWORK 14 AWG 3M
22	26058000	1	NORAC UC5 NETWORK 12-PIN PLUG
23	28050303	1	NORAC RUBBER TOP&BOLT F.SENSOR
24	28055503	1	NORAC VALVE MOUNTING HARDWARE
25	28086500	1	UC4 SENSOR MOUNTING BKT. NORAC
26	28086600	1	FOAM DISC F. SENSOR NORAC
27	78216100	1	NORAC VALVE BLOCK COMP, DEUTSCH CON.

WWW.PDTRONIK.PL

HARDI	**Agroparts: www.HARDI-INTERNATIONAL.com**	
	NORAC VAR. RATE VALVE UC4/UC5 M0380-HIN, 01:01:16	Page 0 Date 16.03.2016 13:36

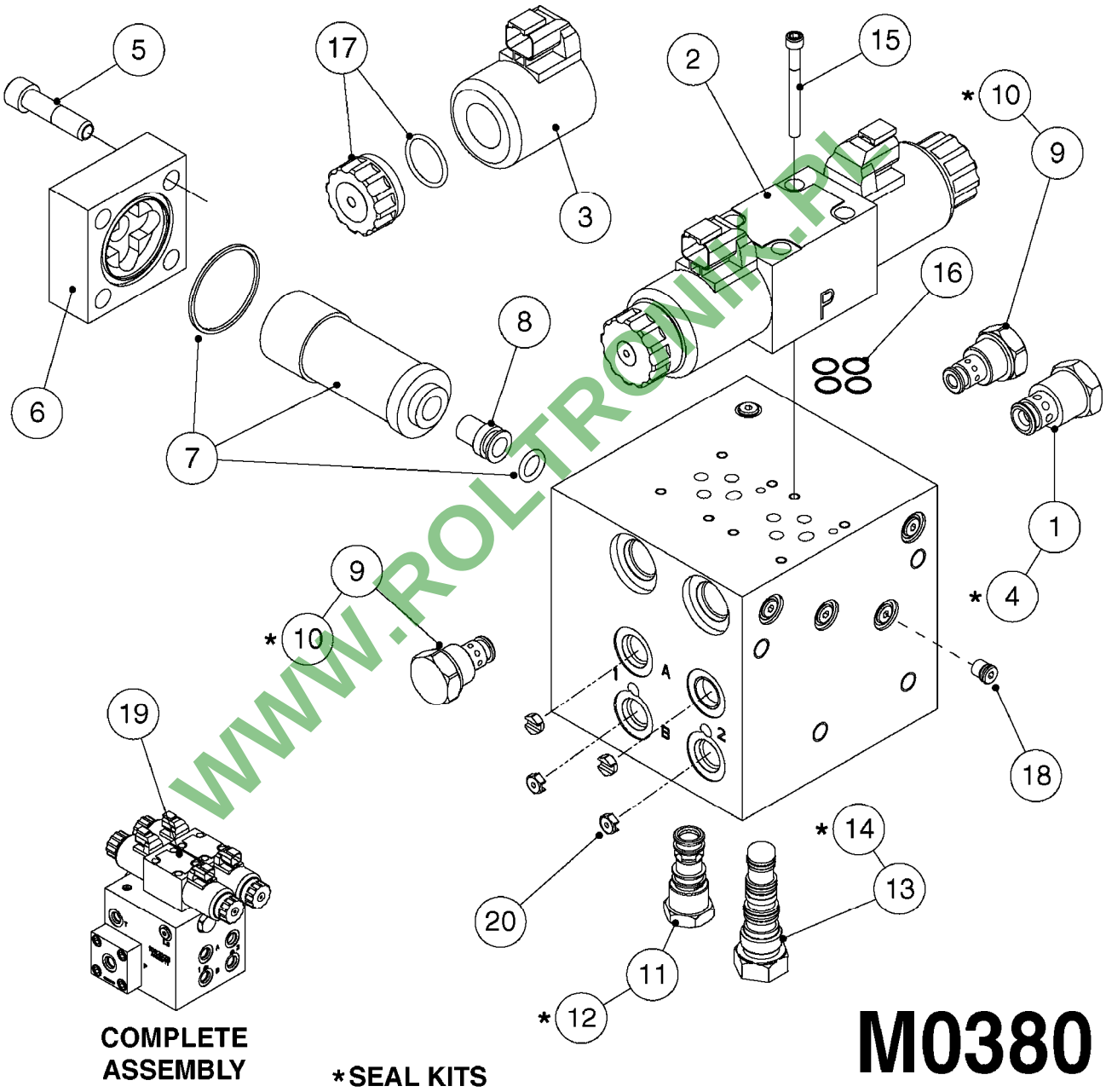

WWW.ROLTRONIK.PL

Pos.	parts-n°	order qty	description
1	28049403	1	NORAC CHECK VALVE
2	28055803	1	NORAC SOLENOID - DEUTSCH CONN.
3	28056503	1	COIL, NORAC, PROP, DEUTSCH
4	28066903	1	NORAC SEAL KIT F.28049403
5	28067103	1	NORAC HEX CAPSCREW 3/8X1-1/4"
6	28067203	1	NORAC FILTER CAP - 4 BOLT
7	28067303	1	NORAC FILTER ELEMENT KIT UC5
8	28067403	1	NORAC VALVE FILTER INSERT
9	28067503	1	NORAC CHECK VALVE C-8-2
10	28067603	1	NORAC SEAL KIT F.28067503
11	28067703	1	NORAC CHECK VALVE C-8-3
12	28067803	1	NORAC SEAL KIT F.28067703
13	28067903	1	NORAC CHECK VALVE C-8-4
14	28068003	1	NORAC SEAL KIT F.28067903
15	28068103	1	NORAC HEX CAPSCREW 10-24X2 SS
16	28068203	1	NORAC O-RING F.SOLENOID VALVE
17	28074903	1	NORAC COIL NUT AND O-RING
18	28089903	1	NORAC PLUG#2 SAE ZERO-LEAK
19	78216100	1	NORAC VALVE BLOCK COMP, DEUTSCH CON.
20	78603300	1	NORAC ONE WAY ORIFICE, .047"

WWW.ROLTRONIK.PL