HARDI	**Agroparts: www.HARDI-INTERNATIONAL.com**	
	Commander 4400/6600/9000 1850 Gallon Eagle 80', 88', 90', 100'	Country-Code 11
		Date 16.03.2016 13:54

WWW.ROL-TROK.PL

main group	page-n°	date	description
Pumps			
	A0330-HIN	01:01:16	PUMP - 463 W/ MOUNTING BASE
	A0340-HIN	01:01:16	PUMP - 463/1000 RPM W/MOUNTING
	A0350-HIN	01:01:16	PUMP - 464 540/1000 RPM
	A0380-HIN	01:01:16	PUMP - 463 FLEX CAPACITY
	A0390-HIN	01:01:16	PUMP - 460/462/463 FITTINGS
	A0450-HIN	01:01:16	PUMP - 650 ACE CENTRIFUGAL
	A0460-HIN	01:01:16	PUMP HYD.MOTOR ACE 650
	A0560-HIN	01:01:16	C.V.PTO-BLACK TRIANG.(POST'05)
System overview			
	AA101-HIN	01:01:16	COMMANDER 6600/9000 OVERVIEW
Controls, Filters, Valves			
	B0320-HIN	01:01:16	EC BOOM VALVES NCM
	B0370-HIN	01:01:16	PRESSURE REGULATOR - S93 06
	B0430-HIN	01:01:16	MANIFOLD - S67 VALVE
	B0500-HIN	01:01:16	SMART VALVE S67 S93 (07)
	B0610-HIN	01:01:16	CHECK VALVES - S40
	B0620-HIN	01:01:16	CHECK VALVES - S53
	B0630-HIN	01:01:16	CHECK VALVES - S67
	B0640-HIN	01:01:16	CHECK VALVES - S67 (2011)
	B0720-HIN	01:01:16	EASY CLEAN FILTER
	B0730-HIN	01:01:16	PRESSURE FILTER - CYCLONE
	B0740-HIN	01:01:16	NCM 4400/6600 MANIFOLD
Hydraulics			
	C0020-HIN	01:01:16	HYDRAULICS - CYLINDERS
	C0030-HIN	01:01:16	HYDRAULICS - FAROIL CYLINDERS
	C0040-HIN	01:01:16	HYDRAULICS - CYLINDERS (07)
	C0570-HIN	01:01:16	HYD.BLOCK EAGLE/FORCE PRE 2012
	C0580-HIN	01:01:16	CETOP VALVES
	C0590-HIN	01:01:16	HYD.BLOCK EAGLE/FORCE 2012
	C0610-HIN	01:01:16	BASIC HYDRAULICS NCM 4400/6600
	C0630-HIN	01:01:16	TRACK HYDRAULICS NCM 4400/6600
	C0640-HIN	01:01:16	HYD EAGLE HZ SPC 80'-100'
Booms, Nozzle Bodies & Tubes			
	D0390-HIN	01:01:16	BOOM SPC PARAL.CTR.80-100' DK
	D0400-HIN	01:01:16	BOOM - SPC INNER WING 80-100'
	D0410-HIN	01:01:16	BOOM - SPC OUTER WING 80-100'
	D0440-HIN	01:01:16	BOOM SPC PARAL.CTR.80-100' US
	D0450-HIN	01:01:16	BOOM CABLE KIT SPC 80'-90'
	D0560-HIN	01:01:16	TRANSPORT BKTS - NCM/NAVIGATOR
	D1000-HIN	01:01:16	BOOM-NOZZLES 110° FLAT FAN ISO
	D1010-HIN	01:01:16	BOOM-NOZZLES 110° LOWDRIFT ISO
	D1020-HIN	01:01:16	BOOM-NOZZLES 80° FLAT FAN ISO
	D1030-HIN	01:01:16	BOOM-NOZZLE CAPS AND FILTERS
	D1040-HIN	01:01:16	BOOM-NOZZLES INJET
	D1050-HIN	01:01:16	BOOM-NOZZLES MINIDRIFT
	D1060-HIN	01:01:16	BOOM-NOZZLES QUINTASTREAM
	D1090-HIN	01:01:16	NOZZLE BODIES-SNAP FIT
	D1100-HIN	01:01:16	DOUBLE NOZZLE HOLDER-SNAP FIT
	D1110-HIN	01:01:16	NOZZLE TUBES & HOLDER-PLASTIC
Tank and Frame: Field Sprayers			
	E0790-HIN	01:01:16	HUB ASSEMBLE F.4-1/2" SPINDLE
	E0810-HIN	01:01:16	CAMOPLAST TRACK 40 SERIES
	E0830-HIN	01:01:16	CAMOPLAST FRAME 40 SERIES
	E0840-HIN	01:01:16	CAMOPLAST TENSION LINK ASSY.
	E0850-HIN	01:01:16	CAMOPLAST TENSIONER ASSEMBLY
	E0860-HIN	01:01:16	CAMOPLAST ALIGNMENT ASSEMBLY
	E0880-HIN	01:01:16	CAMOPLAST BOGIE MID-ROLLER 40

WWW.R-T-PRINT.PL

main group	page-n°	date	description
	E0890-HIN	01:01:16	CAMOPLAST HUB ASSEMBLY - IDLER
	E0900-HIN	01:01:16	CAMOPLAST HUB ASSY. MID-ROLLER
	E0980-HIN	01:01:16	TANK NCM 4400/6600/9000
	E0990-HIN	01:01:16	LOCKER & CLEAN WATER TANK NCM
	E1000-HIN	01:01:16	SHIELDS NCM 4400/6600/9000
	E1010-HIN	01:01:16	FRAME - NCM 4400/6600
	E1020-HIN	01:01:16	SWIVEL HOSE GUARD - NCM
	E1030-HIN	01:01:16	HYD. DRAWBAR - NCM 6600
	E1040-HIN	01:01:16	FRAME - REAR W/PARALIFT NCM
	E1050-HIN	01:01:16	NCM 4400/6600 NON-SUSPEND.AXLE
	E1060-HIN	01:01:16	NCM 4400/6600 SUSPENDED AXLE
	E1070-HIN	01:01:16	WHEELS FOR NEW COMMANDER
Special equipment, Extras			
	K0110-HIN	01:01:16	CHEMICAL FILLER-HOPPER NCM
	K0180-HIN	01:01:16	DRAIN ASSEMBLY-PULL CORD TYPE
	K0230-HIN	01:01:16	END NOZZLE KIT
	K0250-HIN	01:01:16	ELECTRIC END NOZZLE KIT '09
	K0260-HIN	01:01:16	ELECTRIC END NOZZLE KIT '12
	K0270-HIN	01:01:16	FILTER ASSEMBLIES-IN LINE
	K0370-HIN	01:01:16	FLUSH SYSTEM - NCM/NAVIGATOR
	K0390-HIN	01:01:16	FOAM MARKER COMPRESSOR 2002
	K0400-HIN	01:01:16	FOAM MARKER COMPRESSOR 2007
	K0430-HIN	01:01:16	FOAMMARKER DROPPER UPDATE 2000
	K0470-HIN	01:01:16	FOAM MARKER TANK - NCM/NAV
	K0500-HIN	01:01:16	HOSE REEL - COMMANDER
	K0560-HIN	01:01:16	PRESSURE GAUGES
	K0610-HIN	01:01:16	QUICKFILL-VALVES-BANJO 2" & 3"
	K0740-HIN	01:01:16	RINSE SYSTEM NOZZLE - LOW MOD.
Fittings			
	L0010-HIN	01:01:16	FITTINGS-CAP NUTS & HOSE BARBS
	L0020-HIN	01:01:16	FITTNGS-T-PIECES,CAPS & ELBOWS
	L0030-HIN	01:01:16	FITTINGS - HEXAGON NIPPLES
	L0040-HIN	01:01:16	FITTINGS - NIPPLES & ELBOWS
	L0050-HIN	01:01:16	FITTINGS - HOSE CONNECTORS
	L0060-HIN	01:01:16	FITTINGS - BULKHEAD
	L0070-HIN	01:01:16	FITTINGS - S-40
	L0080-HIN	01:01:16	FITTINGS - S-53
	L0090-HIN	01:01:16	FITTINGS - S-56 & S-61
	L0100-HIN	01:01:16	FITTINGS - S-67
	L0110-HIN	01:01:16	FITTINGS - S-93
	L0120-HIN	01:01:16	BULK HOSE
	L0130-HIN	01:01:16	HOSE CLAMPS
Electrical Equipment			
	M0010-HIN	01:01:16	BOOM AND WORKING LIGHT KIT
	M0020-HIN	01:01:16	BOOM AND WORKING LIGHT KIT 09
	M0030-HIN	01:01:16	CFX-750 DISPLAY, DGPS
	M0040-HIN	01:01:16	EZ-GUIDE PLUS LIGHT BAR
	M0050-HIN	01:01:16	EZ-STEER STEERING SYSTEM
	M0060-HIN	01:01:16	EZ-GUIDE 500 LIGHTBAR
	M0070-HIN	01:01:16	EZ-STEER 500 STEERING SYSTEM
	M0080-HIN	01:01:16	EZ-GUIDE 250 LIGHTBAR
	M0130-HIN	01:01:16	COMMON SENSORS AND BRACKETS
	M0140-HIN	01:01:16	PRESSURE SENSOR - AMP
	M0150-HIN	01:01:16	ANGLE SENSOR NCM
	M0160-HIN	01:01:16	TRAFFIC LIGHT KIT
	M0180-HIN	01:01:16	SYSTEM OVERVIEW HC5500
	M0190-HIN	01:01:16	DISPLAY HC 5500
	M0200-HIN	01:01:16	SPRAYBOX II

WWW.ROTRONIK.PL

main group	page-n°	date	description
	M0210-HIN	01:01:16	HYDRAULIC CONTROL BOX 39-PIN
	M0220-HIN	01:01:16	CABLES
	M0230-HIN	01:01:16	JUNCTION BOX - LIQUID
	M0240-HIN	01:01:16	POWER SUPPLY CABLES
	M0250-HIN	01:01:16	JOBCOM AND BREAK OUT
	M0260-HIN	01:01:16	TRACK ASSEMBLE BOX NCM
	M0270-HIN	01:01:16	HC 5500 ACCESSORIES
	M0280-HIN	01:01:16	39 PIN CABLES
	M0290-HIN	01:01:16	NORAC UC4 BOOM HEIGHT CONTROL
	M0300-HIN	01:01:16	NORAC VARIABLE RATE VALVE UC4
	M0350-HIN	01:01:16	JUNCTION BOXES - HYDRAULIC
	M0360-HIN	01:01:16	NORAC SEVERE TERRAIN KIT
	M0370-HIN	01:01:16	NORAC UC5 BOOM HEIGHT CONTROL
	M0380-HIN	01:01:16	NORAC VAR. RATE VALVE UC4/UC5
	M0400-HIN	01:01:16	HYD. JUNCTION BOX 2012

WWW.ROLTRONIK.PL

PUMP REPAIR KIT

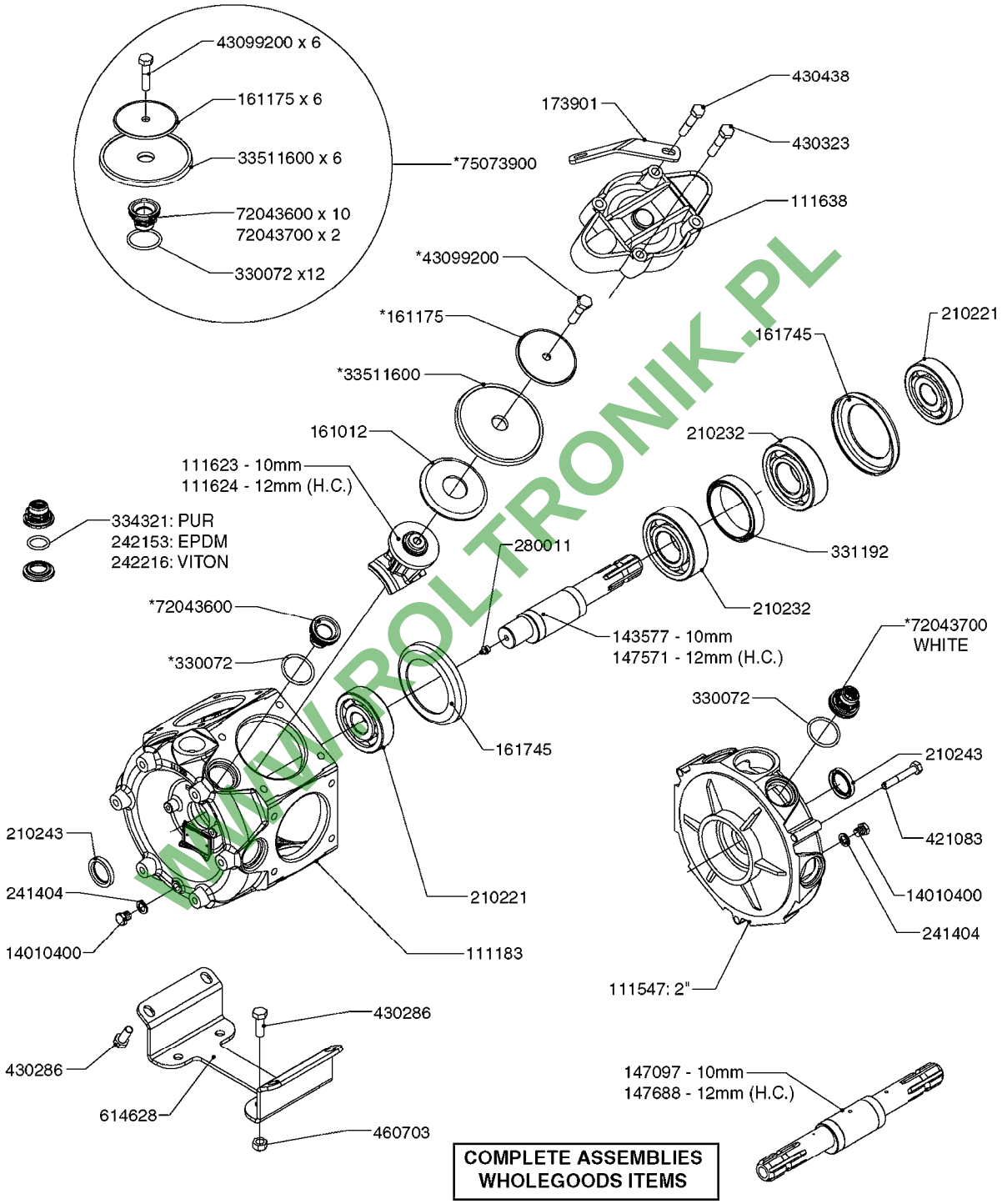

COMPLETE ASSEMBLIES WHOLEGOODS ITEMS

COMPLETE PUMPS

821587 - 463/10 2" W/THROUGH SHAFT (540 RPM)
82166300 - 463/12 2" (540 RPM H.C. INLINE PORTS)
463/12 2" (540 RPM H.C. OFFSET PORTS) REPLACED BY 82168700 (PAGE A0350)

A0330

WWW.ROLTRONIK.PL

PUMP - 463 W/ MOUNTING BASE
A0330-HIN, 01:01:16

parts-n°	order qty	description
111183	1	PUMP CASTING 460-463 (PAINTED)
111547	1	PUMP FRONT 460-463-2'(PAINT)
111623	1	CONNECTING ROD 463/10MM
111624	1	CONNECTING ROD 463/12MM
111638	1	VALVE COVER 463 HC+1000 VERS.
143577	1	CRANK SHAFT F.363/462/463-10mm
147097	1	CRANK SHAFT 363-463/10 THROUGH
147571	1	CRANK SHAFT F.463-12mm
147688	1	CRANK SHAFT 462/12 THROUGH
161012	1	DIAPHRAGM BACKING DISC F. 463
161175	1	DIAPHRAGM DISC F. 463 PUMP
161745	1	METAL SPACER F.363/463
173901	1	LIFT STRAP F.PUMP 463
210221	1	BEARING BALL 6407
210232	1	BEARING BALL 6310
210243	1	SEAL OIL 35 X 47 X 7
241404	1	DOWTY SEAL 1/4"
242153	1	O-RING D26X4 EPDM
242216	1	O-RING VITON F/1202/1302/462
280011	1	GREASE NIPPLE 3/8' SAE H TR
330072	1	O-RING D53.5/D45.5X4
331192	1	SPACER, MODEL 361/363
334321	1	O-RING POLY. 34.0x26.0x4.0
421083	1	BOLT HEX 8.8 DEL M10X65
430286	1	BOLT HEX 8.8 DEL M12X30 FT
430323	1	BOLT HEX 8.8 DEL M12X60
430438	1	BOLT HEX 8.8 DEL M12X65
460703	1	NUT HEX M12X1.75 LOCK DIN985
614628	1	FOOT FOR PUMP 460-463 PAINTED
821587	1	PUMP 463/10 THROUGH SHAFT TWNF
14010400	1	PLUG 1/4" BSP
33511600	1	DIAPHRAGM PUMP 463/464 PUMP PUR
43099200	1	BOLT HEX SS M12 X 30 DIN933 A4
72043600	1	VALVE FOR 462/463
72043700	1	VALVE FOR 462/463 W.VENT HOLE
75073900	1	PUMP KIT 463 "06"
82166300	1	PUMP 463-12 2"SUC 540RPM
82168700	1	PUMP 464/12/540 OFFSET PORTS

WWW.RC-TRONIK.PL

PUMP - 463/1000 RPM W/MOUNTING
A0340-HIN, 01:01:16

Page 0

Date 16.03.2016 13:54

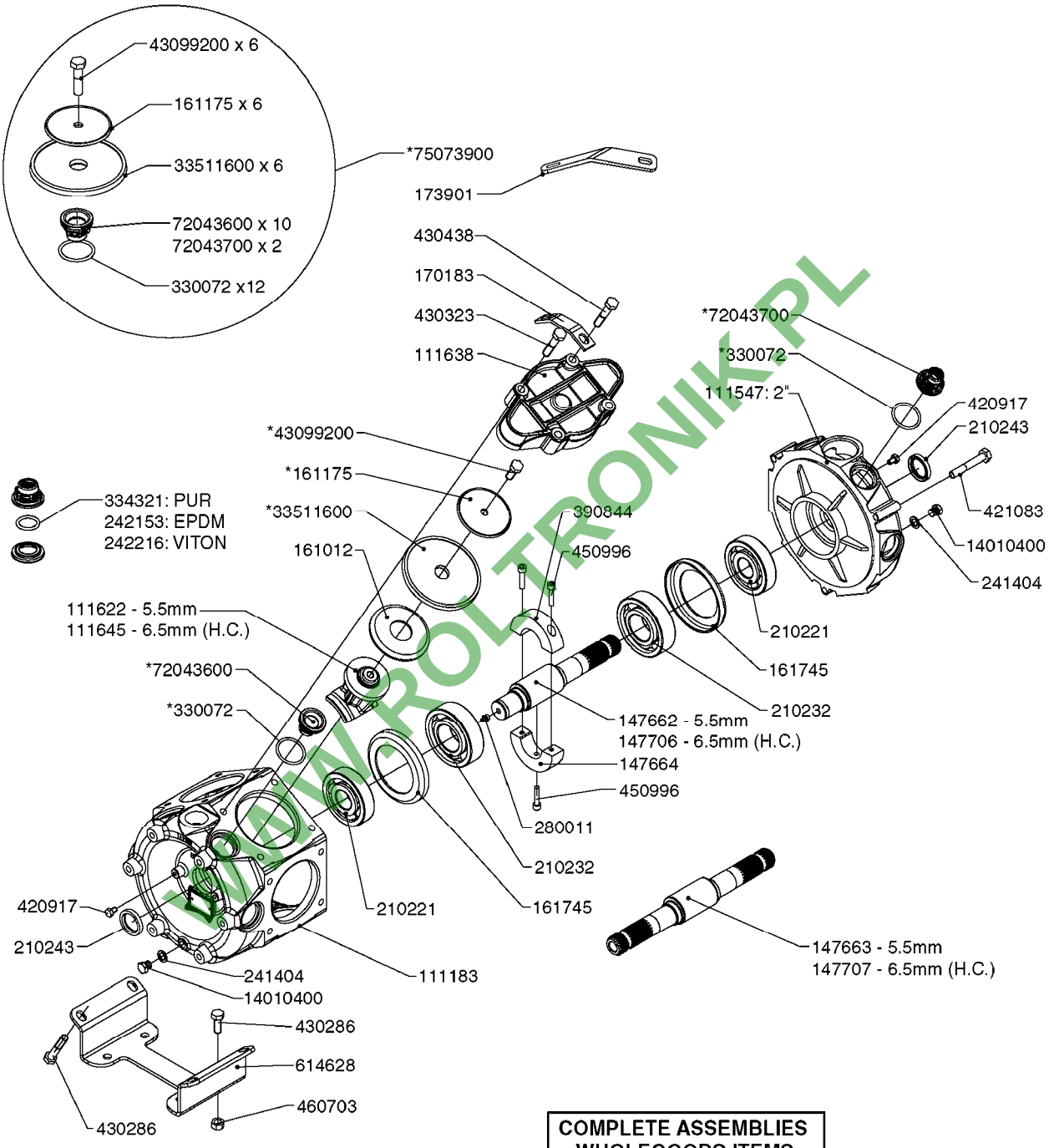

WWW.ROLTRONIK.PL

COMPLETE ASSEMBLIES
WHOLEGOODS ITEMS

COMPLETE PUMPS

821585 - 463/5.5 W/THROUGH SHAFT (1000 RPM)
821587 - 463/10 W/THROUGH SHAFT (540 RPM)
82169400 - 464/6.5 (1000 RPM - H.C. INLINE PORTS)
72293300 - 463/6.5 W/THROUGH SHAFT (1000 RPM)
463/12 (540 RPM H.C. OFFSET PORTS) REPLACED BY 82168700 (PAGE A0350)
463/6.5 (1000 RPM H.C. OFFSET PORTS) REPLACED BY 82168800 (PAGE A0350)

A0340

PUMP - 463/1000 RPM W/MOUNTING
A0340-HIN, 01:01:16

parts-nº	order qty	description
111183	1	PUMP CASTING 460-463 (PAINTED)
111547	1	PUMP FRONT 460-463-2'(PAINT)
111622	1	CONNECTING ROD 463/5.5MM
111638	1	VALVE COVER 463 HC+1000 VERS.
111645	1	CONNECTING ROD 463/6.5MM
147662	1	CRANK SHAFT F.363/463-5.5MM
147663	1	CRANK SHAFT 363/463-5.5 THROUG
147664	1	COUNTERBALANCE 363/463 WEIGHT
147706	1	CRANK SHAFT F.363/463-6.5MM
147707	1	CRANK SHAFT 363/463-6.5 THROUG
161012	1	DIAPHRAGM BACKING DISC F. 463
161175	1	DIAPHRAGM DISC F. 463 PUMP
161745	1	METAL SPACER F.363/463
170183	1	LIFT STRAP F.PUMP 360/361/462
173901	1	LIFT STRAP F.PUMP 463
210221	1	BEARING BALL 6407
210232	1	BEARING BALL 6310
210243	1	SEAL OIL 35 X 47 X 7
241404	1	DOWTY SEAL 1/4"
242153	1	O-RING D26X4 EPDM
242216	1	O-RING VITON F/1202/1302/462
280011	1	GREASE NIPPLE 3/8' SAE H TR
330072	1	O-RING D53.5/D45.5X4
334321	1	O-RING POLY. 34.0x26.0x4.0
390844	1	COUNTERBALANCE 363/463 POM
420917	1	BOLT HEX 8.8 RAW M8X12 FT
421083	1	BOLT HEX 8.8 DEL M10X65
430286	1	BOLT HEX 8.8 DEL M12X30 FT
430323	1	BOLT HEX 8.8 DEL M12X60
430438	1	BOLT HEX 8.8 DEL M12X65
450996	1	BOLT ALLEN M8X35 DIN 912 RAW
460703	1	NUT HEX M12X1.75 LOCK DIN985
614628	1	FOOT FOR PUMP 460-463 PAINTED
821585	1	PUMP 463/5.5 THRGH SHAFT 1000R
821587	1	PUMP 463/10 THROUGH SHAFT TWNF
14010400	1	PLUG 1/4" BSP
33511600	1	DIAPHRAGM PUMP 463/464 PUMP PUR
43099200	1	BOLT HEX SS M12 X 30 DIN933 A4
72043600	1	VALVE FOR 462/463
72043700	1	VALVE FOR 462/463 W.VENT HOLE
72293300	1	PUMP 463/6.5 MED-2-1000-GG
75073900	1	PUMP KIT 463 "06"
82168700	1	PUMP 464/12/540 OFFSET PORTS
82168800	1	PUMP 464/6.5/1000 OFFSET PORTS
82169400	1	PUMP 464-6.5-STD-2-1000 FK

WWW.KOLTRONIK.PL

HARDI	**Agroparts: www.HARDI-INTERNATIONAL.com**	
	PUMP - 464 540/1000 RPM A0350-HIN, 01:01:16	Page 0 Date 16.03.2016 13:54

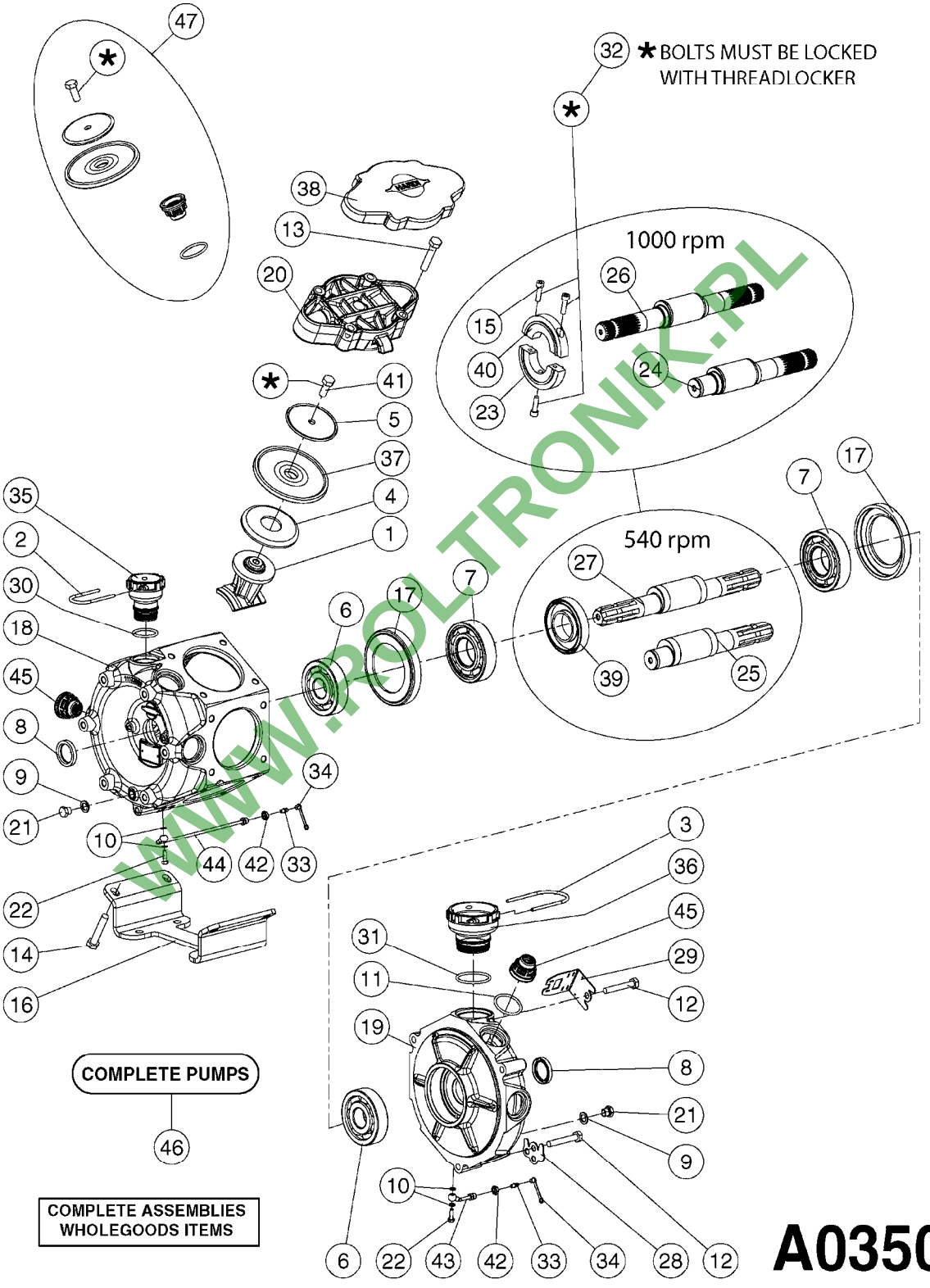

WWW.ROLTRONIK.PL

PUMP - 464 540/1000 RPM
A0350-HIN, 01:01:16

Pos.	parts-n°	order qty	description
1	111622	1	CONNECTING ROD 463/5.5MM
1	111623	1	CONNECTING ROD 463/10MM
1	111624	1	CONNECTING ROD 463/12MM
1	111645	1	CONNECTING ROD 463/6.5MM
2	145996	1	FITT.DK S-67 FORK
3	145997	1	FITT.DK S-93 FORK
4	161012	1	DIAPHRAGM BACKING DISC F. 463
5	161175	1	DIAPHRAGM DISC F. 463 PUMP
6	210221	1	BEARING BALL 6407
7	210232	1	BEARING BALL 6310
8	210243	1	SEAL OIL 35 X 47 X 7
9	241404	1	DOWTY SEAL 1/4"
10	242374	1	WASHER Ø10/ø6X1 COPPER
11	330072	1	O-RING D53.5/D45.5X4
12	421072	1	BOLT HEX 8.8 RAW M10X65
13	430312	1	BOLT HEX 8.8 RAW M12X60
14	430437	1	BOLT HEX 8.8 RAW M12X65
15	450995	1	BOLT ALLEN M8X30 DIN 912 RAW
16	614628	1	FOOT FOR PUMP 460-463 PAINTED
17	11171900	1	METAL SPACER F. 364/464 MACHINED
18	11172200	1	PUMP HOUSE 464 MACHINED 5/4" BSP RED
19	11172600	1	FRONTPART 464 MACHINED 2" BSP RED
20	11173000	1	VALVE COVER.464 MACHINED RED
21	14010400	1	PLUG 1/4" BSP
22	14120400	1	BANJOBOLT M6 X 19
23	14120700	1	COUNTERWEIGHT 364/464-1000
24	14137300	1	CRANKSHAFT 364/464-5.5 1000
24	14137400	1	CRANKSHAFT 364/464-6.5 1000
25	14137600	1	CRANKSHAFT 364/464-10
25	14137700	1	CRANKSHAFT 464-12
26	14137900	1	CRANKSHAFT 364/464-5.5 GG 1000
26	14138000	1	CRANKSHAFT 364/464-6.5 GG 1000
27	14138200	1	CRANKSHAFT 364/464-10 GG
27	14138300	1	CRANKSHAFT 464-12 GG
28	16383000	1	GREASE NIPPLE PLATE 464
29	16390600	1	BRACKET FOR RPM SENSOR
30	24266600	1	O-RING D 38,0 X 4,0 70SH.NITR
31	24266800	1	O-RING D 54,0 X 4,0 70SH.NITR
32	28045503	1	LOCTITE 262 .5ML (.017oz.)
33	28163300	1	GREASE NIPPLE H1 M6X1 DIN 7412
34	28163400	1	CAP F. GREASENIPPLE YELLOW M6X1
35	32242200	1	FITTING S67 5/4" KON. RG 2014
36	32242400	1	FITTING S93 2" KON. RG 2014
37	33511600	1	DIAPHRAGM PUMP 463/464 PUMP PUR
38	33524000	1	COVER PLASTIC 464 PUMP
39	33524200	1	DISTANCE RING/GREASE SPLIT
40	39136200	1	HALFPART 364/464-1000
41	43099200	1	BOLT HEX SS M12 X 30 DIN933 A4
42	46134000	1	NUT HEX M10x1 H=2.3 NV=14 ELZIN
43	61097000	1	BANJOTUBE SHORT 464 COMPL.
44	61097100	1	BANJOTUBE LONG 464 COMPL.
45	72043600	1	VALVE FOR 462/463
46	72993500	1	PUMP 464/12-540, CM
46	72993600	1	PUMP 464/6.5 MED-2-1000
46	82168700	1	PUMP 464/12/540 OFFSET PORTS
46	82168800	1	PUMP 464/6.5/1000 OFFSET PORTS
46	82169000	1	PUMP 464/10-MOD-2-540
47	75586000	1	PUMP KIT 464

WWW.PCTRONIK.PL

HARDI	**Agroparts: www.HARDI-INTERNATIONAL.com**	
	PUMP - 463 FLEX CAPACITY A0380-HIN, 01:01:16	Page 0 Date 16.03.2016 13:54

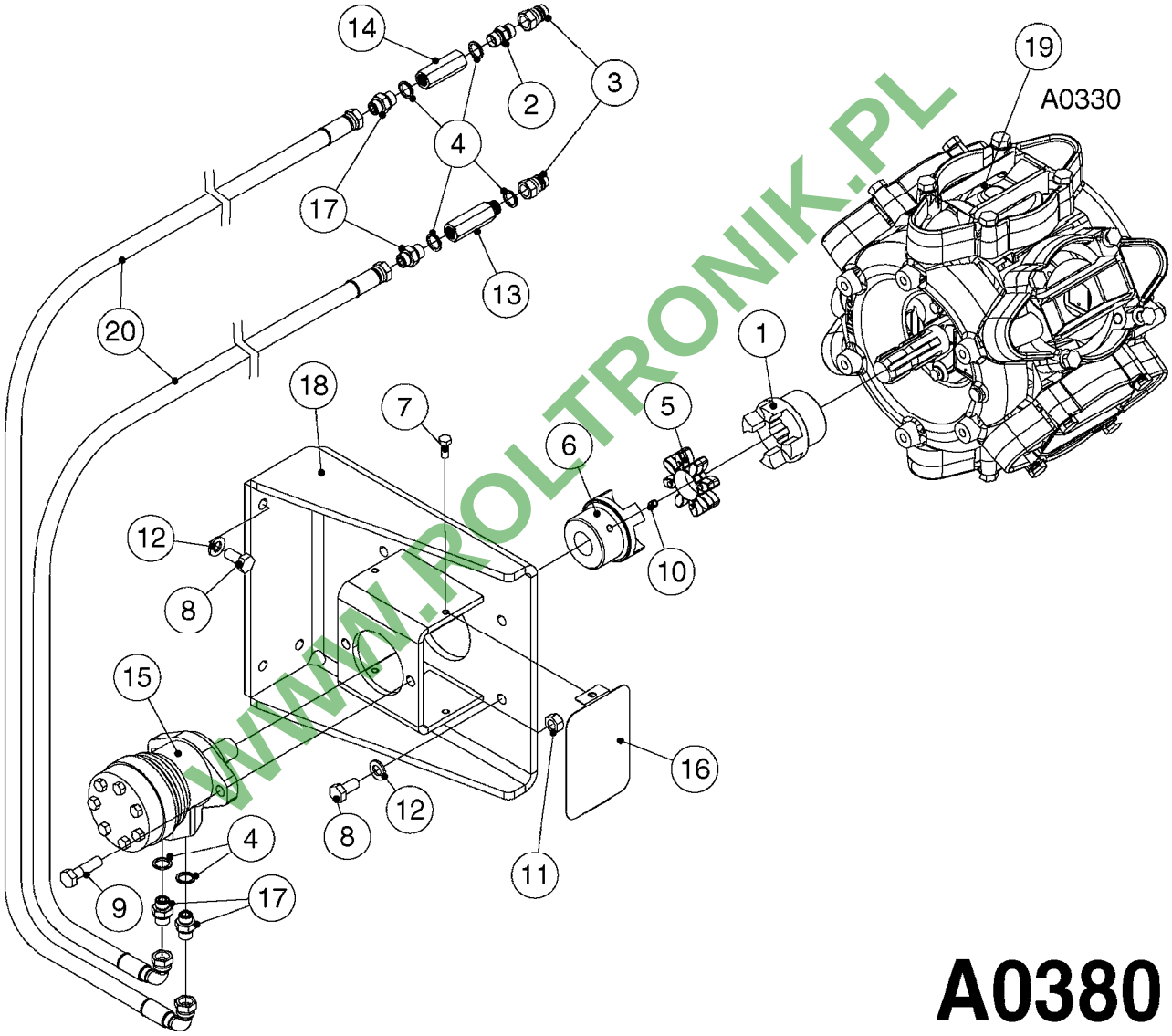

WWW.ROLTRONIK.PL

A0380

PUMP - 463 FLEX CAPACITY
A0380-HIN, 01:01:16

Pos.	parts-n°	order qty	description
1	111438	1	HUB F.CLUTCH 361/460 PUMP
2	147132	1	HEX NIPPLE 1/2"X1/2" BSP DEL
3	230311	1	QUICK COUPLING 1/2"
4	241356	1	DOWTYSEAL 1/2"
5	283916	1	TOOTHED RIM FOR CLUTCH
6	284521	1	COUPLING HALF CYL.D25MM-KEY
7	420582	1	BOLT HEX 8.8 DEL M8X20 FT A2
8	430522	1	BOLT HEX 8.8 DEL M12X25 FT
9	430878	1	BOLT HEX 8.8 DEL M12X45 DIN931
10	450052	1	SCREW SET M8X10 BLACK ALLAN
11	460703	1	NUT HEX M12X1.75 LOCK DIN985
12	471127	1	WASHER, M12, Ø24/13.0X 2.5, SS
13	782153	1	PRESS. FLOW VALVE 1/2", 32L/MIN, PAINTED (BLACK)
14	782154	1	CHECK VALVE 284794 (BLACK)
15	783010	1	MOTOR HYDRAULIC OMR50
16	16154400	1	COVER PLATE F. FLEX PUMP MT.
17	23235300	1	HEX NIPPLE 1/2"-13/16"
18	61038400	1	BRACKET FLEX PUMP MOUNT NCM
19	72363900	1	PUMP 463/10-MOD-2-540
20	78571100	1	HOSE HY X 1/2" X 248" STR+ELB

WWW.ROLTRONIK.PL

SUCTION SIDE OF PUMP (WITH 1-1/2" SUCTION PORT)

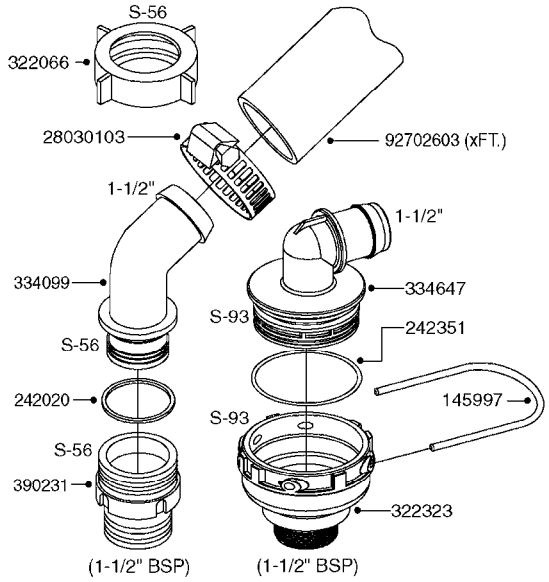

PRESSURE SIDE OF PUMP

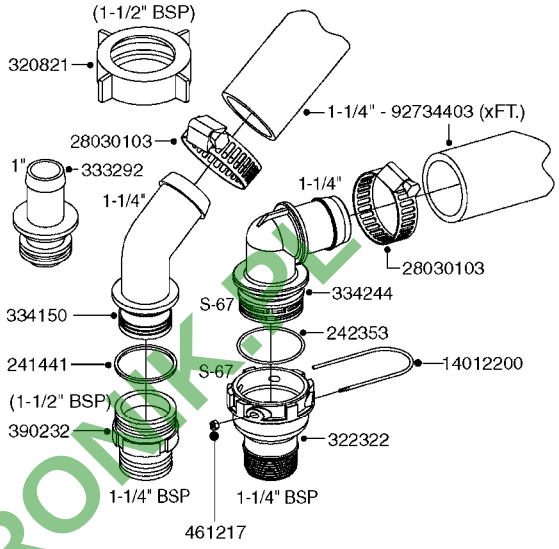

SUCTION SIDE OF PUMP (WITH 2" SUCTION PORT)

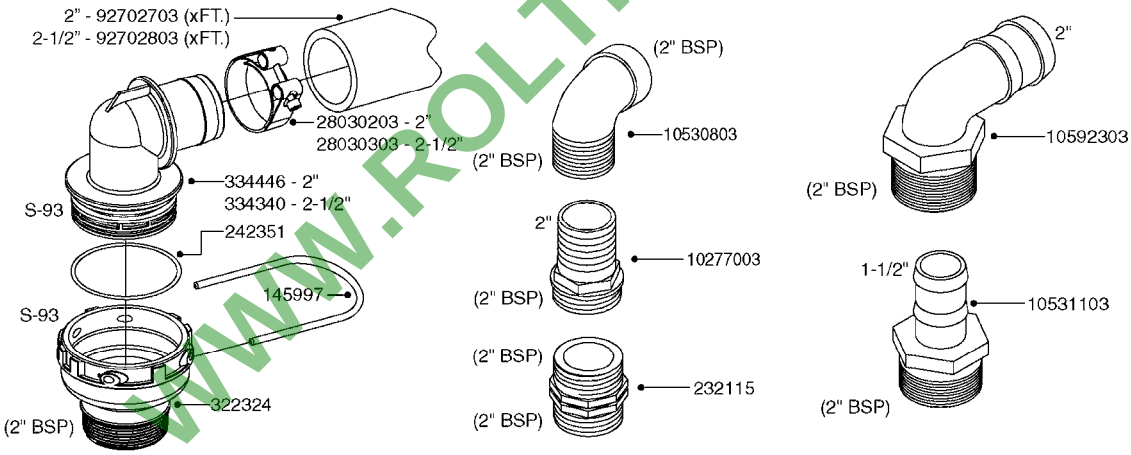

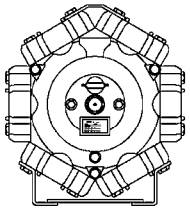

COMPLETE ASSEMBLIES WHOLEGOODS ITEMS

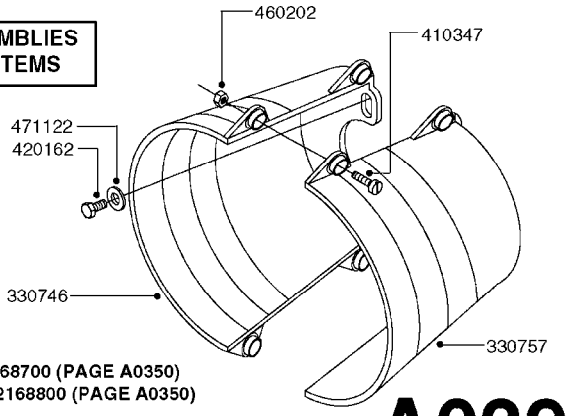

821585 - 463/5.5 W/THROUGH SHAFT (1000 RPM)
821587 - 463/10 W/THROUGH SHAFT (540 RPM)
82169400 - 464/6.5 (1000 RPM H.C. INLINE PORTS)
72293300 - 463/6.5 W/THROUGH SHAFT (1000 RPM)
463/12 (540 RPM H.C. OFFSET PORTS) REPLACED BY 82168700 (PAGE A0350)
463/6.5 (1000 RPM H.C. OFFSET PORTS) REPLACED BY 82168800 (PAGE A0350)

A0390

WWW.ROLTRONIK.PL

parts-nº	order qty	description
145997	1	FITT.DK S-93 FORK
232115	1	FITT HEX NIPPLE 2'-2' BSP
241441	1	O-RING D29.3X3
242020	1	O-RING 39.2 X 3 VITON
242351	1	O-RING D69.5X3.0 VITON F.S-93
242353	1	O-RING D44.2X3.0 VITON F.S-67
320821	1	FITT.DK NUT 1-1/2" BSP
322066	1	FITT.DK S-56 NUT
322322	1	FITT.DK S-67 X 1-1/4"BSP MALE
322323	1	FITT.DK S-93 X 1-1/2"BSP MALE
322324	1	FITT.DK S-93 X 2"BSP MALE
330746	1	GUARD PTO LOWER PART SHORT
330757	1	GUARD PTO UPPER PART SHORT
333292	1	FITT.DK HB 1"O'RING F.1-1/2"
334099	1	FITT.DK S-61 ELB.1-1/2"110 DEG
334150	1	FITT.DK HB 1-1/4" 110 F.1-1/2"
334244	1	FITT.DK S-67 ELB.1-1/4"
334340	1	FITT.DK S-93 ELBOW 2.5"
334446	1	FITT.DK S-93 ELB.2" PVC
334647	1	FITT.DK S93 ELB 1-1/2" 90 PVC
390231	1	FITT.DK NIPPLE 1-1/2 X S56
390232	1	FITT.DK HN 1-1/2' X 1-1/4' BSP
410347	1	SCREW M6X20 8.8
420162	1	BOLT HEX 8.8 DEL 3/8"x15MM
460202	1	NUT HEX M6
461217	1	NUT HEX M5 LOCK
471122	1	WASHER, M10, Ø20/10.5X 2.0, SS
821585	1	PUMP 463/5.5 THRGH SHAFT 1000R
821587	1	PUMP 463/10 THROUGH SHAFT TWNF
10277003	1	FITT.PO.HB 2.00X2.00 MCPHEE
10530803	1	FITT.PO.SE 2.00X2.00 45 DEG.
10531103	1	FITT.PO.HB 2.00"NPT X 1.50"HOS
10592303	1	FITT.PO.HB 2.00X 2.00BSP 90DEG
14012200	1	FITT.DK S-67 FORK W/M5 THREADS
28030103	1	CLAMP HOSE GEAR P5/4-S1.5"6724
28030203	1	CLAMP HOSE T-BOLT S2" 235-67
28030303	1	CLAMP HOSE T-BOLT S2.5" 235-76
72293300	1	PUMP 463/6.5 MED-2-1000-GG
82168700	1	PUMP 464/12/540 OFFSET PORTS
82168800	1	PUMP 464/6.5/1000 OFFSET PORTS
82169400	1	PUMP 464-6.5-STD-2-1000 FK
92702603	1	HOSE PVC SUCT GRAY 1-1/2"
92702703	1	HOSE PVC SUCT GRAY 2"
92702803	1	HOSE PVC SUCT GRAY 2.5"
92734403	1	HOSE R X5/4" X200PSI WP X0012"

WWW.PO-TRONIK.PL

HARDI	**Agroparts: www.HARDI-INTERNATIONAL.com**	
	PUMP - 650 ACE CENTRIFUGAL A0450-HIN, 01:01:16	Page 0 Date 16.03.2016 13:54

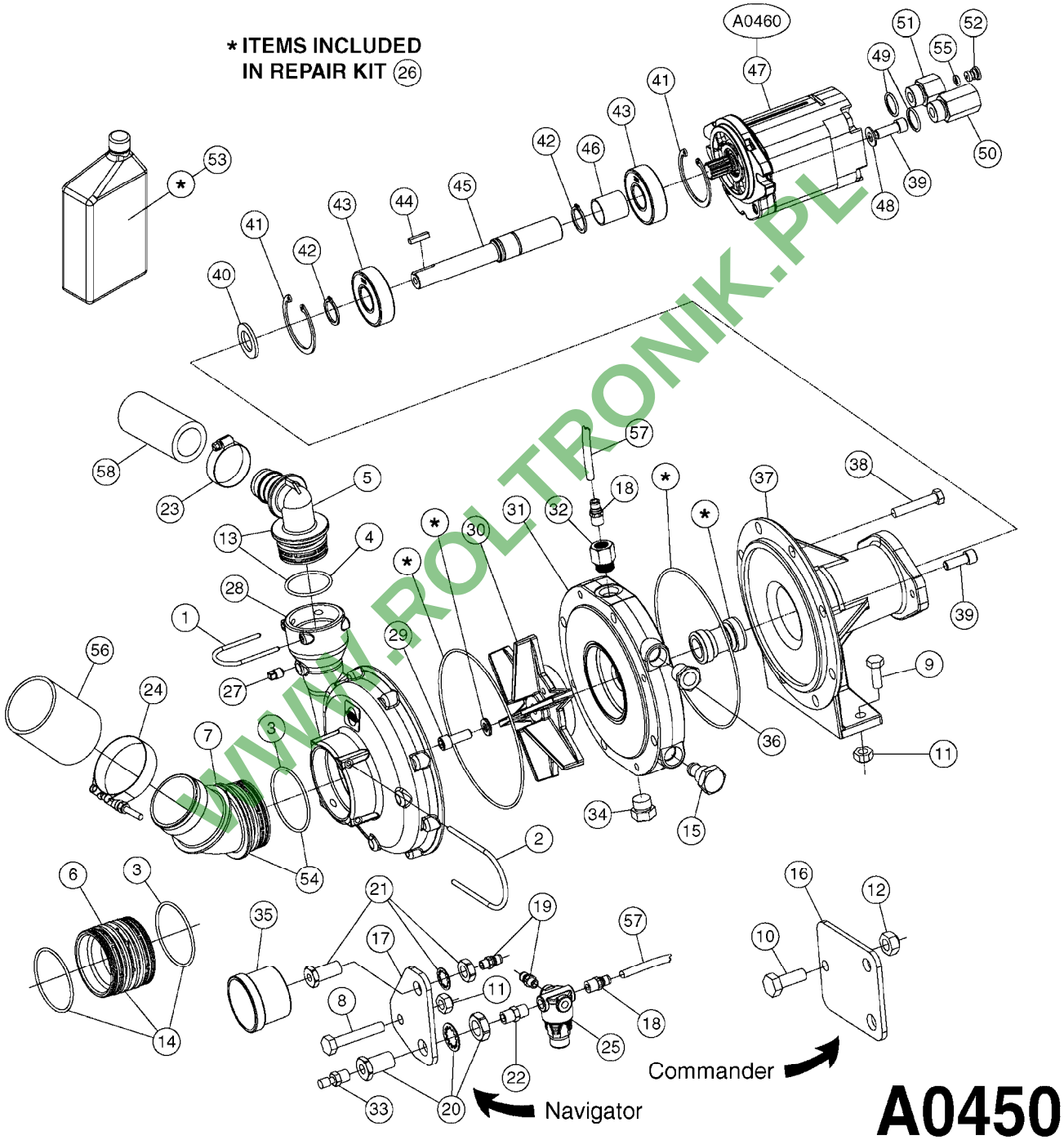

WWW.ROLTRONIK.PL

Pos.	parts-n°	order qty	description
1	145996	1	FITT.DK S-67 FORK
2	145997	1	FITT.DK S-93 FORK
3	242351	1	O-RING D69.5X3.0 VITON F.S-93
4	242353	1	O-RING D44.2X3.0 VITON F.S-67
5	334244	1	FITT.DK S-67 ELB.1-1/4"
6	334572	1	FITT.DK S-93 ADAPTOR MALE MALE
7	334883	1	FITT.DK S-93 ELB.2-1/2"45D PVC
8	420906	1	BOLT HEX 8.8 DEL M10X60
9	421002	1	BOLT HEX 8.8 DEL M10X30 FT DIN933
10	430286	1	BOLT HEX 8.8 DEL M12X30 FT
11	460423	1	NUT HEX M10X1.5 LOCK
12	460703	1	NUT HEX M12X1.75 LOCK DIN985
13	726573	1	FITT. S67 5/4" 90° W/O-RING
14	728525	1	FITT. S93 CONNECTOR W/O-RINGS
15	782131	1	BLIND PLUG F.3/4" CARTR.VALVE
16	16162303	1	BRKT, ACE 650, GAUGE GAUGE BRACKET FOR COMMANDER
17	16162703	1	BRKT, ACE 650, NAV. GAUGE GAUGE BRACKET FOR NAVIGATOR
18	23003703	1	FITT 1/4 NPTF-1/4 PTC
19	23003803	1	FITT 1/8 NPTF-1/4 PTC
20	23003903	1	FITT 1/4 THRU-WALL COUP,3/4-16
21	23004003	1	FITT 1/8 THRU-WALL COUP,5/8-18
22	23004203	1	FITT 1/4" NPTF-1/4" NPTF UNION
23	28030103	1	CLAMP HOSE GEAR P5/4-S1.5"6724
24	28030303	1	CLAMP HOSE T-BOLT S2.5" 235-76
25	28065303	1	REGULATOR 1/4", 30PSI, PARKER
26	28066503	1	PUMP REPAIR KIT ACE 650 INCLUDES 1 QT. BARRIER FLUID
27	28068303	1	PLUG 1/8" NPT SS
28	28068403	1	PUMP HOUSING FRONT ACE 650
29	28068503	1	CAP SCREW 3/8" X 3/4" SS
30	28068603	1	IMPELLER, WETSEAL SS ACE 650
31	28068703	1	SEAL PLATE SS ACE 650
32	28068803	1	ADAPTER #8 SAE X 1/4" FNPT
33	28068903	1	AIR VALVE 1/4"
34	28069003	1	PLUG #8 SAE X 1/8" FNPT
35	28069203	1	PRESS.GAUGE 0-60 PSI 1/8" NPT
36	28069303	1	SIGHT GAUGE #8 SAE W/FLOAT
37	28069403	1	PUMP HOUSING REAR ACE 650
38	28069503	1	CAP SCREW 3/8" X 2"
39	28069603	1	CAP SCREW 3/8" X 1"
40	28069703	1	SLINGER 1.5" X 7/8"
41	28069803	1	SNAP RING INTERNAL, FRAME
42	28069903	1	SNAP RING EXTERNAL, SHAFT
43	28070003	1	BEARING F.ACE 650 PUMP
44	28070103	1	KEY 0.188 X 0.188 X 0.875
45	28070203	1	SHAFT 11T FEMALE SPLINE SS
46	28070303	1	SPACER, SHAFT ACE 650
47	28070403	1	HYDRAULIC MOTOR ACE 650
48	28070503	1	WASHER 3/8" SS
49	28070603	1	O-RING #10 SAE
50	28070703	1	REVERSE CHECK ASSEMBLY #10 SAE
51	28070803	1	BODY F.RESTRICTOR, #10 SAE
52	28070903	1	RESTRICTOR
53	29004303	1	ACE 650, BARRIER FLUID 32oz
54	72072900	1	FITT.S93 2-1/2" 45°PVC W/ORING
55	78601603	1	O-RING F. RESTRIC ACE HYD PUMP
56	92702803	1	HOSE PVC SUCT GRAY 2.5"
57	92703303	1	HOSE LLDPE .25"X.17"X12" BLACK
58	92734403	1	HOSE R X5/4" X200PSI WP X0012"

WWW.PO.TROK.PL

HARDI	**Agroparts: www.HARDI-INTERNATIONAL.com**	
	PUMP HYD.MOTOR ACE 650 A0460-HIN, 01:01:16	Page 0 Date 16.03.2016 13:54

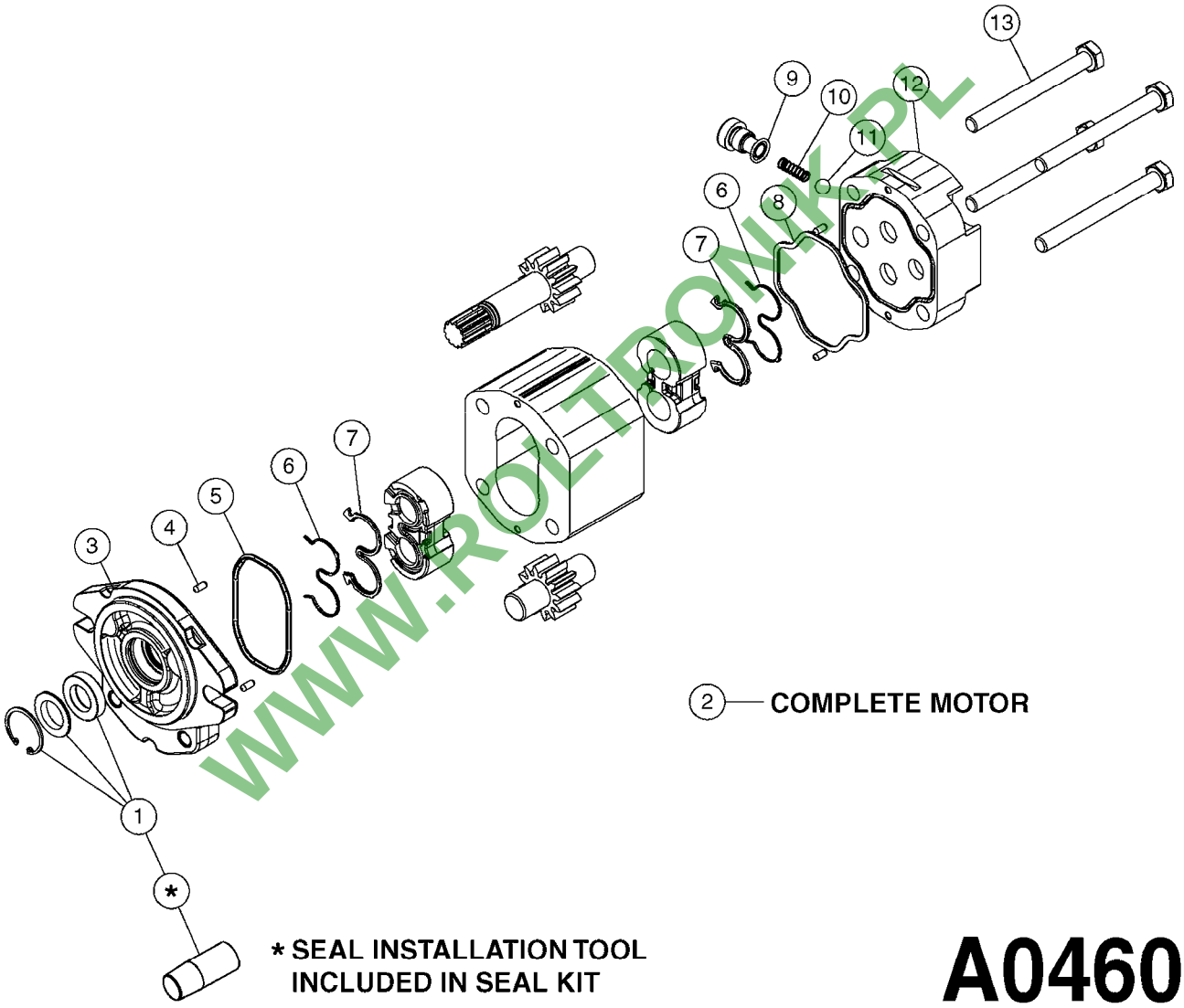

WWW.ROLTRONIK.PL

A0460

PUMP HYD.MOTOR ACE 650
A0460-HIN, 01:01:16

Pos.	parts-n°	order qty	description
1	28066603	1	MOTOR REPAIR KIT ACE 650
2	28070403	1	HYDRAULIC MOTOR ACE 650
3	28071003	1	DRIVE PLATE, FLANGE, ACE MOTOR
4	28071103	1	PIN, MOTOR ASSEMBLY
5	28071203	1	HOUSING SEAL, FRONT EXTERNAL
6	28071303	1	ANTI-EXTRUSION SEAL
7	28071403	1	COMPENSATION SEAL
8	28071503	1	HOUSING SEAL, REAR EXTERNAL
9	28071603	1	O-RING, COASTING CHECK CAP
10	28071703	1	SPRING, COASTING CHECK
11	28071803	1	BALL, COASTING CHECK
12	28071903	1	END PLATE W.#10 SAE END PORTS
13	28072003	1	HEX CAP SCREW, MOTOR ASSEMBLY

WWW.ROLTRONIK.PL

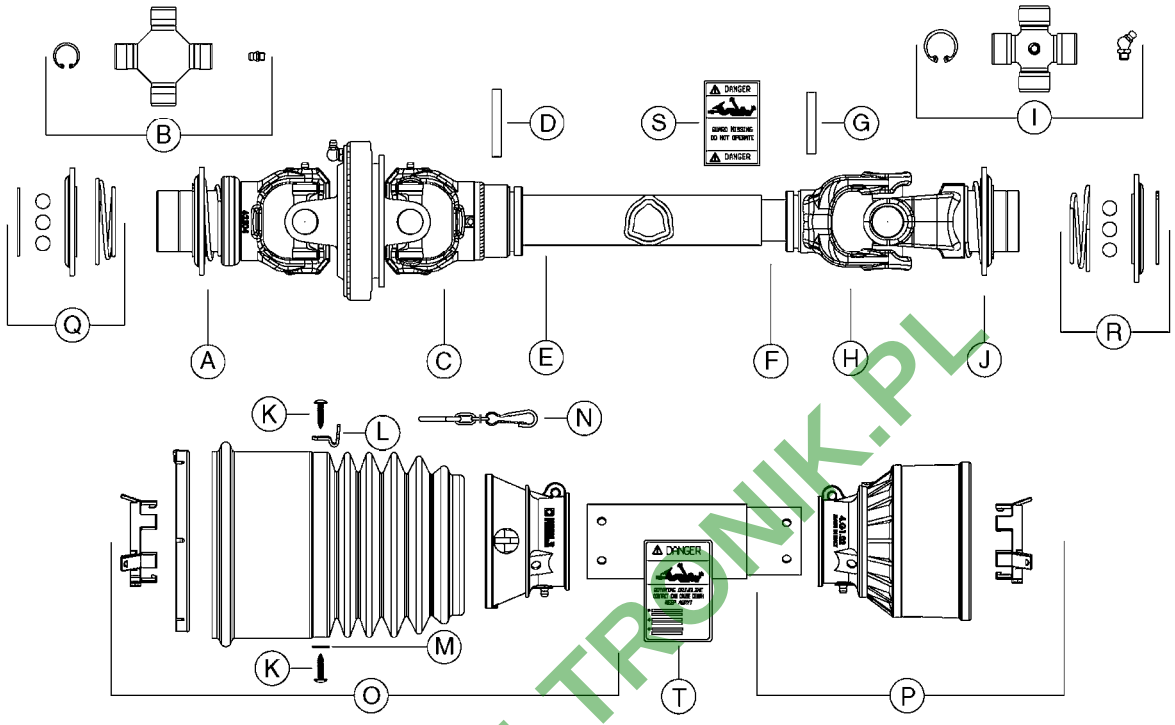

COMPLETE ASSEMBLIES WHOLEGOODS ITEMS

PTO #	28035003	28035103
TRACTOR	1-3/8" 21 SPLINE	1-3/4" 20 SPLINE
IMPLEMENT	1-3/8" 21 SPLINE	1-3/8" 21 SPLINE
LENGTH	1210/1890	1210/1890
A	28040203	28041303
B	28040303	28040303
C	28040403	28040403
D	28009803	28009803
E	28009003	28009003
F	28009103	28009103
G	28009903	28009903
H	28010103	28010103
I	28040503	28009403
J	28040603	28027803
K	28040903	28040903
L	28041703	28041703
M	28041603	28041603
N	28040703	28040703
O	28041103	28041103
P	28041203	28041503
Q	28040803	28041403
R	28041003	XXXXXXXX
S	28041803	28041803
T	28041903	28041903

A0560

WWW.POLTRONIK.PL

parts-n°	order qty	description
28009003	1	PTO TUBE OUTER F.CV 1060MM
28009103	1	PTO TUBE INNER F.CV 1060MM
28009403	1	UNIV. JOINT 27x74.6mm
28009803	1	PTO PIN TUBE RETAINER OUTER
28009903	1	PTO TUBE RETAINER INNER
28010103	1	PTO YOKE F.INNER TUBE CV PTO
28027803	1	PTO YOKE 1-3/8X21SPL BALL LOCK
28035003	1	PTO 1-3/8/21X1-3/8/21X1260 CV
28035103	1	PTO 1-3/4/20X1-3/8/21X1260 CV
28040203	1	PTO YOKE 1-3/8X21SPL SLIP F.CV
28040303	1	UNIV. JOINT 22x86mm CV BLK.
28040403	1	PTO YOKE INNER F.CV PTO SHAFT
28040503	1	UNIV. JOINT 27x74.6mm
28040603	1	PTO YOKE 1-3/8X21SPL BLACK
28040703	1	SAFETY CHAIN F.CV BLACK PTO
28040803	1	PTO REPAIR KIT F.PUSH YOKE CV
28040903	1	SELF TAPPING SHIELDING SCREW
28041003	1	PTO REPAIR KIT F.PUSH YOKE
28041103	1	PTO HALF SAFETY SHIELD BLACK
28041203	1	PTO HALF SAFETY SHIELD BLACK
28041303	1	PTO YOKE 1-3/4X20SPL SLIP F.CV
28041403	1	PTO REPAIR KIT F.PUSH YOKE CV
28041503	1	PTO HALF SAFETY SHIELD BLACK
28041603	1	WASHER F.SHIELDING SCREW BLACK
28041703	1	ANCHOR F.RETAINING CHAIN BLACK
28041803	1	DECAL DANGER GUARD MISSING
28041903	1	DECAL DANGER ROT.DRIVELINE

WWW.ROLETRONIK.PL

HARDI	**Agroparts: www.HARDI-INTERNATIONAL.com**	
	COMMANDER 6600/9000 OVERVIEW AA101-HIN, 01:01:16	Page 0 Date 16.03.2016 13:54

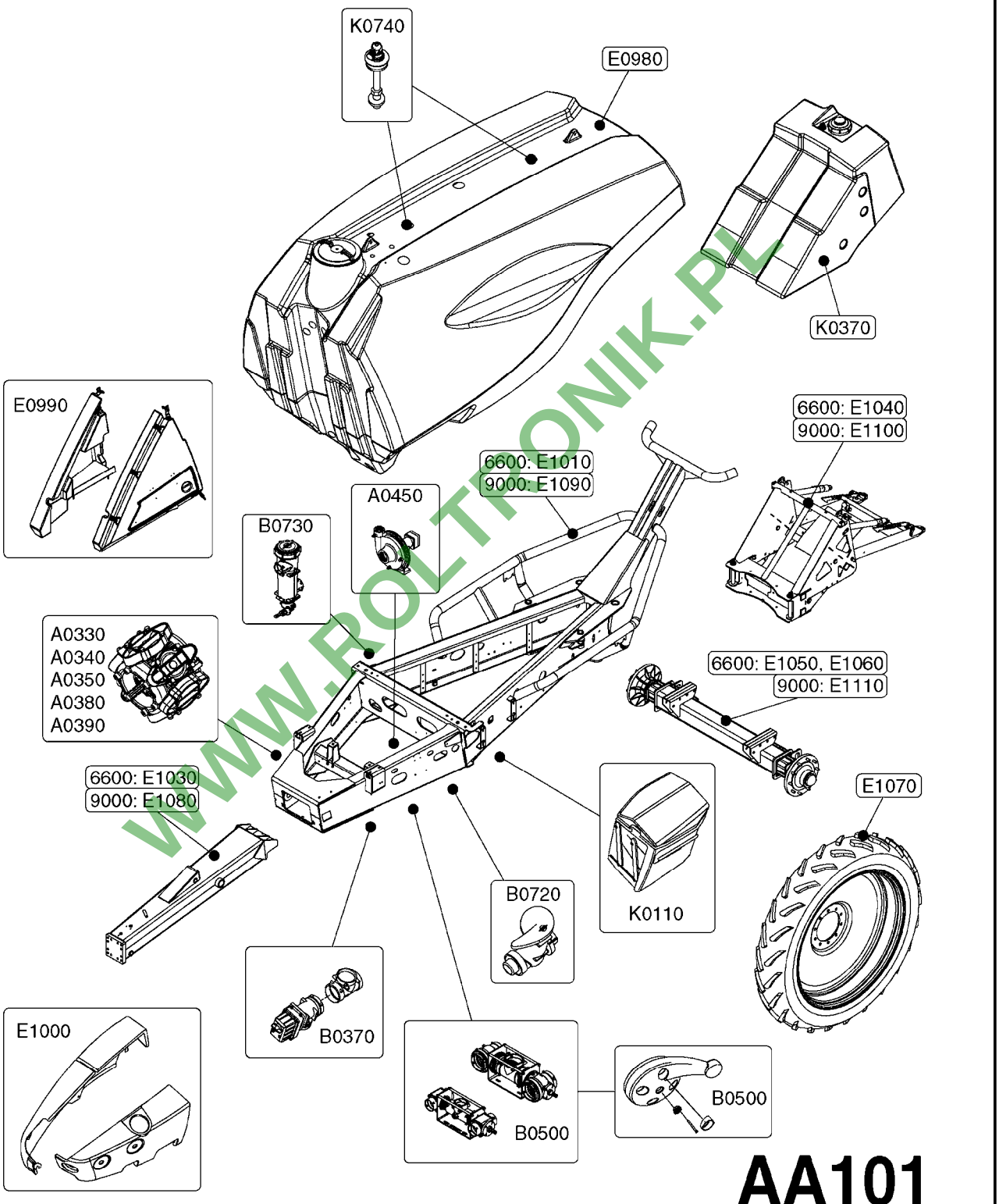

WWW.ROLTRONIK.PL

parts-nº	order qty	description

WWW.ROLTRONIK.PL

HARDI	**Agroparts: www.HARDI-INTERNATIONAL.com**	
	EC BOOM VALVES NCM B0320-HIN, 01:01:16	Page 0 Date 16.03.2016 13:54

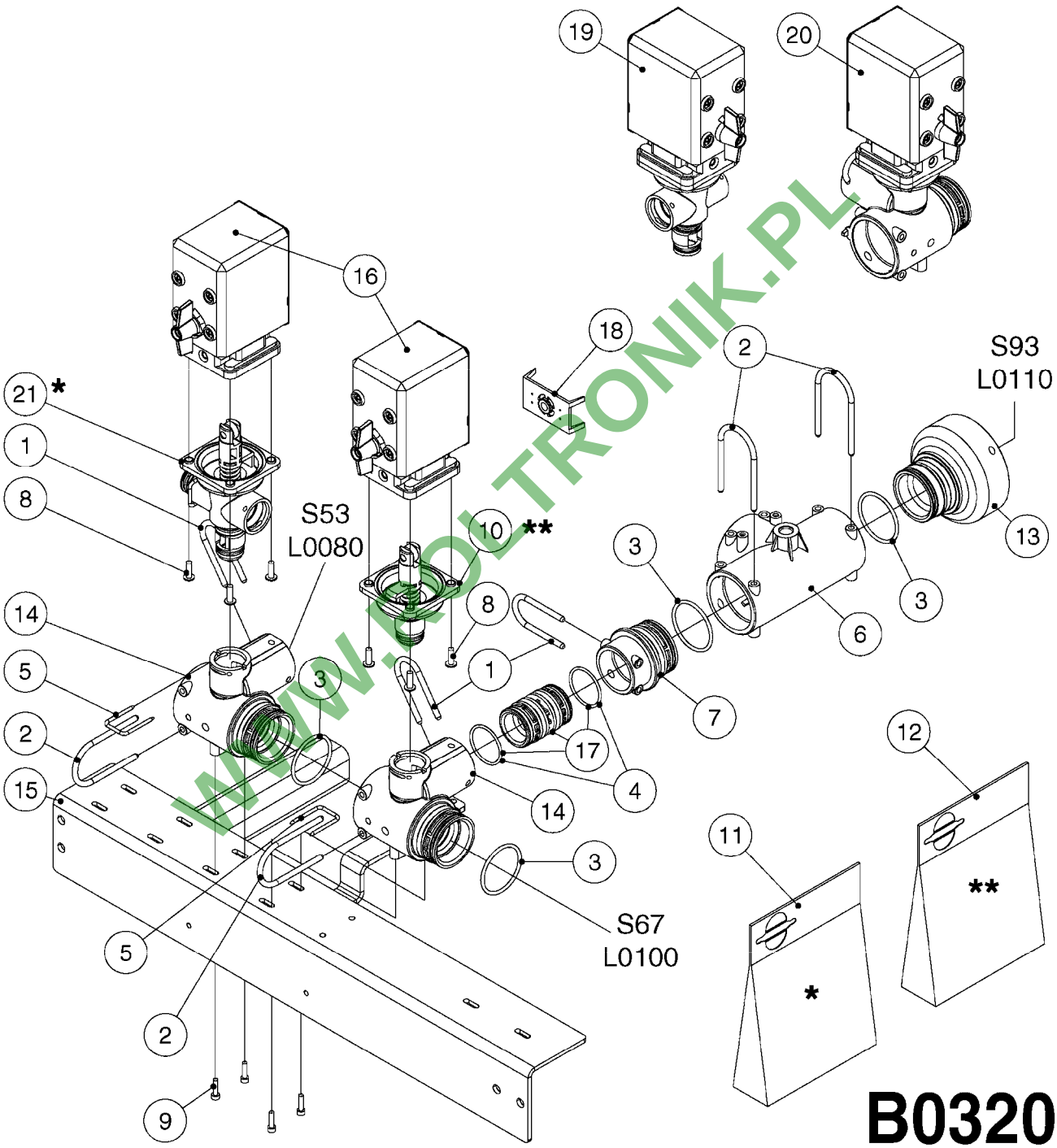

WWW.PDLTRONIK.PL

EC BOOM VALVES NCM
B0320-HIN, 01:01:16

Pos.	parts-n°	order qty	description
1	145995	1	FITT.DK S-53 FORK
2	145996	1	FITT.DK S-67 FORK
3	242353	1	O-RING D44.2X3.0 VITON F.S-67
4	242354	1	O-RING D32.2X3.0 VITON F.S-53
5	270211	1	FITT.DK S25 FORK L=37.5
6	322224	1	FITT.DK S-67 TEE
7	334564	1	FITT.DK S-67 TO S-53 ADAPTER
8	440675	1	SCREW F. PLASTIC 5X16 SS
9	450902	1	BOLT ALLEN HEAD M4 X 16MM
10	725257	1	SPINDLE SECT. F/EC DISTRIBUTOR
11	741822	1	SEAL KIT - 1 SECTION (05)
12	755726	1	O-RING KIT F.EC/ESC SEC.VALVE
13	33500700	1	FITT.DK ADAPTER S-93F S67M
14	33502400	1	DISTRIBUTION HOUSING EFC
15	61032800	1	BRACKET F. EFC SEC.VALVES <4>6
16	72048000	1	MOTOR, DISTRIBUTION 1:300
17	72114300	1	PIEZA CONEXION S53/S53 C/JUNTA
18	72137200	1	MCROSWCH ASSY F.BOOM VLV 300:1
19	72233700	1	SECTION VALVE, EFC, 1:300
20	72284000	1	BYPASS VALVE, EFC, 1:300
21	72591700	1	SPINDLE SECT.W/O CONS.PRESSURE

WWW.ROLTRONIK.PL

HARDI	**Agroparts: www.HARDI-INTERNATIONAL.com**	
	PRESSURE REGULATOR - S93 06 B0370-HIN, 01:01:16	Page 0 Date 16.03.2016 13:54

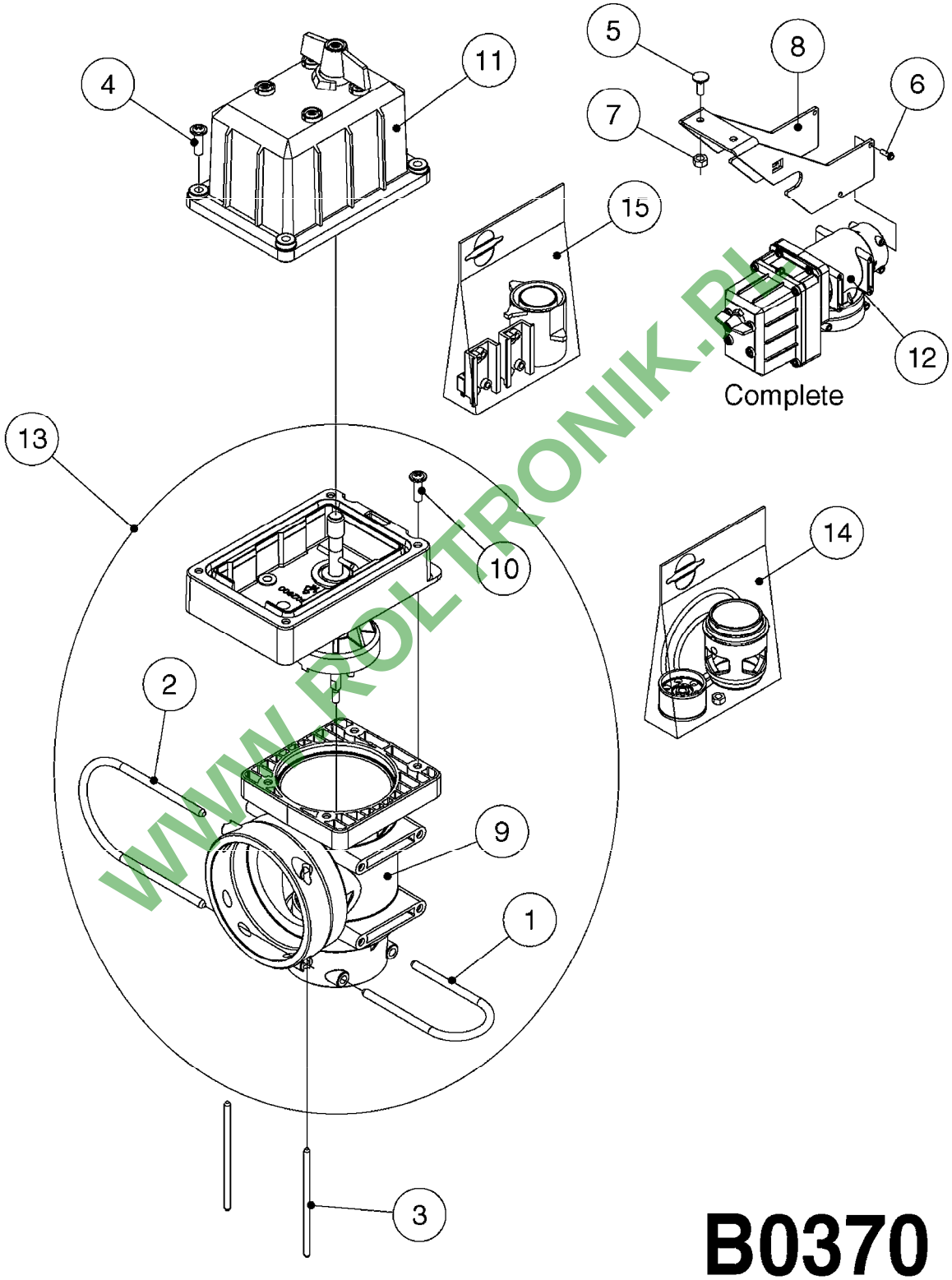

WWW.ROLTRONIK.PL

B0370

PRESSURE REGULATOR - S93 06
B0370-HIN, 01:01:16

Pos.	parts-n°	order qty	description
1	145996	1	FITT.DK S-67 FORK
2	145997	1	FITT.DK S-93 FORK
3	147767	1	PIN 5Ø X 60 S-93 DOUBLE CLAMP
4	440677	1	SCREW F. PLASTIC 5X20 SS
5	440695	1	BOLT CARRIAGE M8X25
6	440698	1	SCREW F.PLASTIC 6X18 SS HEXHD
7	460143	1	NUT HEX M8 LOCK A2 DIN985
8	16244000	1	BRACKET FOR REG. NAV, PAINTED NAVIGATOR PLATFORM BRACKET
9	33510800	1	HOUSING F.PRESS.REG.S67/S93
10	44076200	1	PT TORNILLO 50X16 WN5451 rsf t
11	72374200	1	MOTOR HOUS.REG.1:150 ENCODER
12	72425500	1	REGULATOR S67/S93 CROSS-DRILL
12	72678700	1	REGULATOR S67/S93 CROSS-DRILL CERAMIC COMPONENTS
13	72481600	1	BAG W. CONSOLE&SPINDLE COMPL
14	72678900	1	BAG W.CONE/CYL/GASKET CERAMIC CERAMIC COMPONENTS
14	74190800	1	BAG W.CONE/CYL. AND GASKET
15	74187500	1	SWITCH 5A PRESS.REG REP.KIT 08

WWW.ROLTRONIK.PL

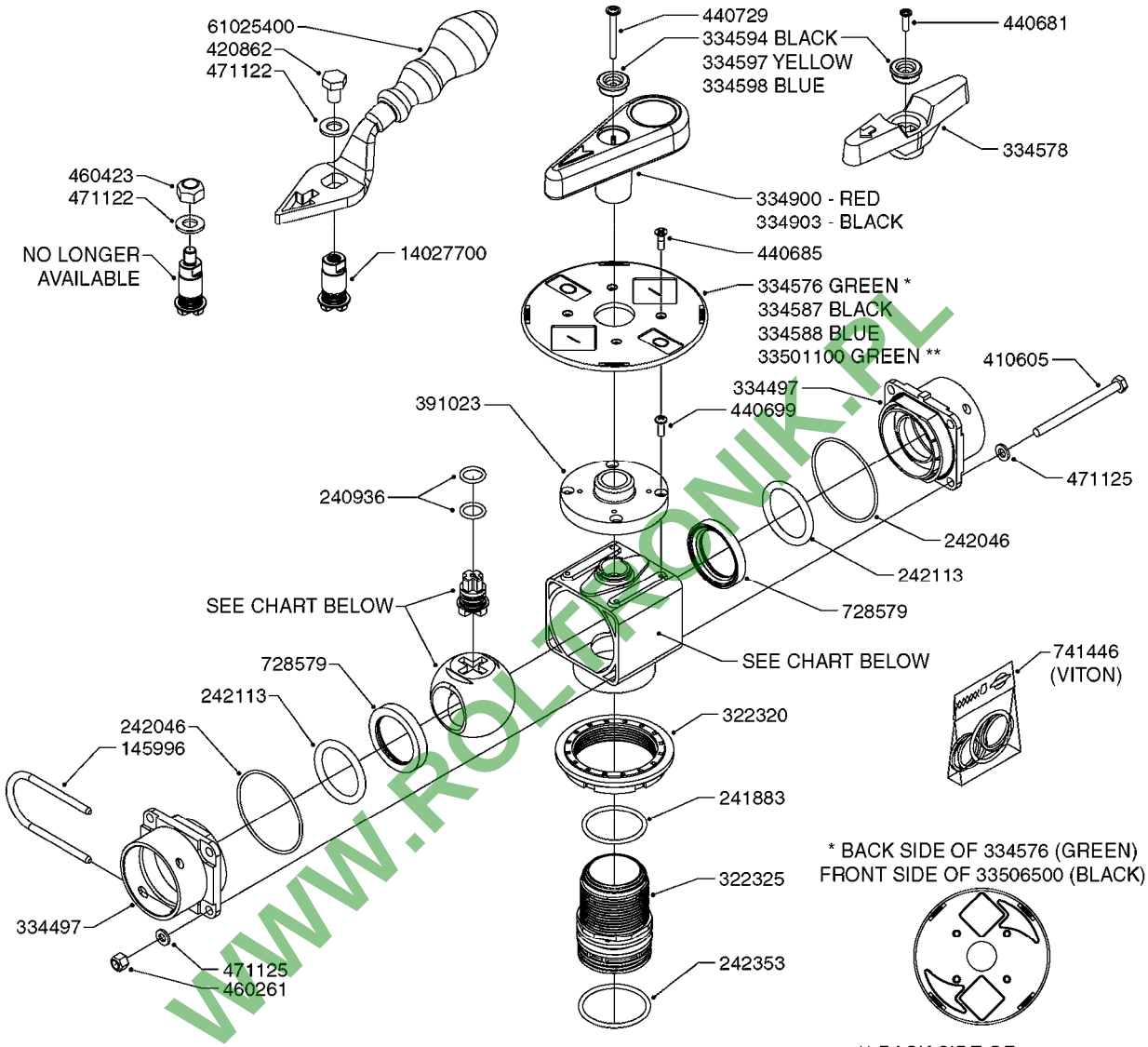

WWW.ROLTRONIK.PL

728391	334594	334576	390204	390623	-	334600
728393	334598	334588	390238	390251	-	334600
728945	334597	-	390262	390777	-	334600
729796	334594	334587	390204	390623	-	334600
840062	334594	334576	391180	390623	-	334600
841062	334594	334576	390204	390623	-	334600
72172100	-	33501100	391039	390623	391023	14027700
72172200	-	-	391039	390623	-	334600
72283600	334594	33506500	391180	390623	391023	334600
72292500	-	-	391180	390623	-	14027700
72538000	-	-	391039	390623	391023	14075700
72691600	334594	334587	390262	390623	-	334600

* BACK SIDE OF 334576 (GREEN)
FRONT SIDE OF 33506500 (BLACK)

** BACK SIDE OF 33501100

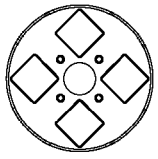

BACK SIDE OF 33506500 (BLACK)

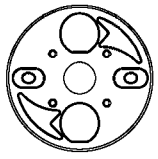

B0430

HARDI	**Agroparts: www.HARDI-INTERNATIONAL.com**	
	MANIFOLD - S67 VALVE B0430-HIN, 01:01:16	Page 1 Date 16.03.2016 13:54

parts-n°	order qty	description
145996	1	FITT.DK S-67 FORK
240936	1	O-RING D13.3X2.4 NITRIL
241883	1	O-RING D39.2X3 NITRIL 242020
242046	1	O-RING D60X2
242113	1	O-RING D37.5X5.3 VITON
242353	1	O-RING D44.2X3.0 VITON F.S-67
322320	1	NUT F.3 WAY VALVE S56
322325	1	FITT.DK S-67 X 1-1/2"BSP LONG
334497	1	END COVER 3 WAY VALVE S-67
334576	1	FACE PLATE F. BALL VALVE GREEN
334578	1	HANDLE FOR VALVE 'OLD' STYLE
334587	1	FACE PLATE F.BALL VALVE BLACK
334588	1	FACE PLATE F. BALL VALVE BLUE
334594	1	PLUG F.VALVE HANDLE BLACK
334597	1	PLUG F.VALVE HANDLE YELLOW
334598	1	PLUG F.VALVE HANDLE BLUE
334600	1	SPINDLE F.3 WAY VALVE
334900	1	HANDLE F.3 WAY VALVE TALL '00
334903	1	HANDLE S67/93 VALVE BLACK
390204	1	BALL F. 3 WAY SUCTION VALVE
390238	1	BALL F. 3 WAY PRESSURE VALVE
390251	1	MOTOR HOUSING F. 3-WAY VALVE
390262	1	BALL F. 2 WAY VALVE
390623	1	HOUSING F.3 WAY VALVE
390777	1	HOUSING F.BALL VALVE 3 WAY
391023	1	SMART VALVE MOUNTING BRACKET
391039	1	BALL F. S67 SMART VALVE
391180	1	BALL F. AGITATOR S67 ARE 268
410605	1	BOLT HEX 8.8 DEL M6X80
420862	1	BOLT HEX 8.8 DEL M10X16 FT
440681	1	SCREW F. PLASTIC 4MM X 14LG SS
440685	1	SCREW F.PLASTIC 4X14 SS C-SUNK
440699	1	SCREW F. PLASTIC 4MMM X12LG SS
440729	1	SCREW F. PLASTIC 4MM X40LG SS
460261	1	NUT HEX M6X1 LOCK A2 DIN985
460423	1	NUT HEX M10X1.5 LOCK
471122	1	WASHER, M10, Ø20/10.5X 2.0, SS
471125	1	WASHER, M6, Ø12/ 6.4X 1.6, SS
728391	1	VALVE S67 PRESSURE MANIFOLD
728393	1	VALVE 3 WAY F.AGITAT.SHUTOFF
728579	1	SEAL F BALL
728945	1	VALVE 2-WAY YELLOW W.S-67 ENDS
729796	1	VALVE S-67 MANUAL D33 J-D
741446	1	REPAIR KIT F.S67 VALVE - VITON
840062	1	VALVE S67 PRESSURE AGITATION
841062	1	VALVE KIT S67 PRESS. MANIFOLD
14027700	1	SPINDLE F.SMART VALVE S67 L=36
14075700	1	SPINDLE F.SMART VALVE S67 L=81
33501100	1	FACE PLATE F.SMART VALVE GREEN
33506500	1	FACE PLATE F.BALL VALVE BLACK
61025400	1	HANDLE SMART VALVE
72172100	1	VALVE S67 "V1" SMART VALVE
72172200	1	VALVE S67 "V2" SMART VALVE
72283600	1	VALVE S67 AGITATION NCM
72292500	1	VALVE S67 SMART VALVE NEW NAV
72538000	1	VALVE S67, LONG SPINDLE
72691600	1	VALVE, S67, 2-WAY F. FILLER

WWW.ROLTRONIK.PL

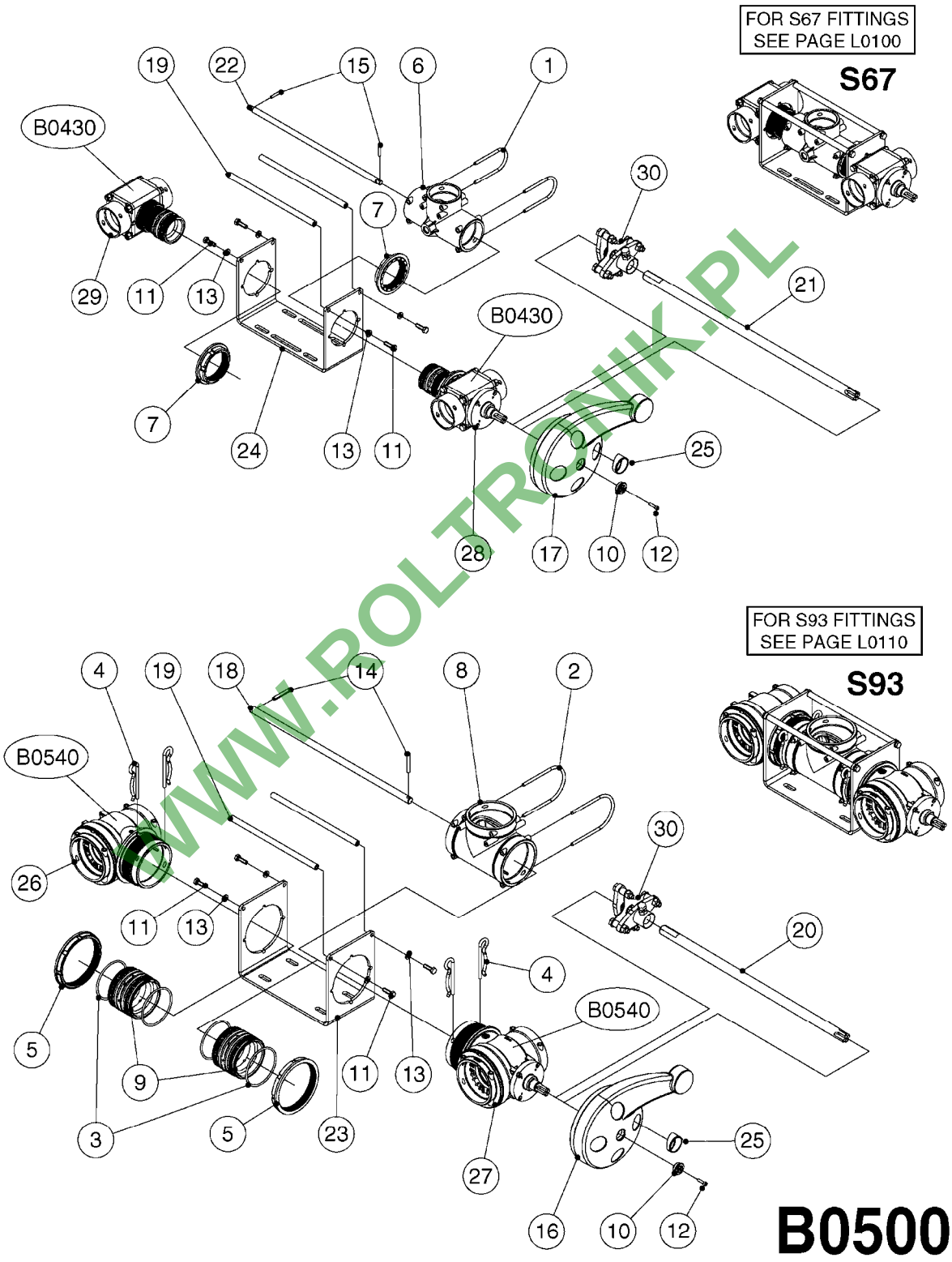

WWW.ROLTRONIK.PL

Pos.	parts-n°	order qty	description
1	145996	1	FITT.DK S-67 FORK
2	145997	1	FITT.DK S-93 FORK
3	242351	1	O-RING D69.5X3.0 VITON F.S-93
4	285791	1	HAIR PIN S93/S67
5	322109	1	FITT.DK S-93 BULKHEAD NUT
6	322224	1	FITT.DK S-67 TEE
7	322320	1	NUT F.3 WAY VALVE S56
8	334545	1	FITT.DK S-93 TEE
9	334572	1	FITT.DK S-93 ADAPTOR MALE MALE
10	334594	1	PLUG F.VALVE HANDLE BLACK
11	410362	1	BOLT HEX 8.8 SS M6X20 FT
12	410922	1	CYL.SKR 8.8 DEL M4X20 RST
12	450902	1	BOLT ALLEN HEAD M4 X 16MM
13	471125	1	WASHER, M6, Ø12/ 6.4X 1.6, SS
14	480733	1	PIN D6 X 40
15	480803	1	PIN Ø4 X 25
16	741844	1	VALVE HANDLE ASSY. SUCTION NCM
17	741845	1	VALVE HANDLE ASSY. PRESSUR NCM
18	14021500	1	SPINDLE F.S93 SMART VALVE
19	14022700	1	SPACER TUBE Ø10 L=212 SS
20	14038100	1	AXLE FOR SUCTION VALVE HANDLE
21	14038200	1	AXLE FOR PRESSURE VALVE HANDLE
22	14068700	1	SPINDLE,SMART VALVE S67 10MM
23	16059900	1	BRACKET 2 STK S93 SMART VALVE
24	16082300	1	BRACKET 2PCS S67 VALVE 15 BAR
25	33505200	1	PLUG FOR SMART VALVE HANDLE
26	72138000	1	VALVE S93 "V2" SMART VALVE
27	72138600	1	VALVE S93 "V3" SMART VALVE
28	72172100	1	VALVE S67 "V1" SMART VALVE NCM 4400/6600
28	72538000	1	VALVE S67, LONG SPINDLE NAV 3000/4000
29	72172200	1	VALVE S67 "V2" SMART VALVE
30	72283000	1	AXLE JOINT F. SMARTVALVE HANDL

WWW.ROLTROK.PL

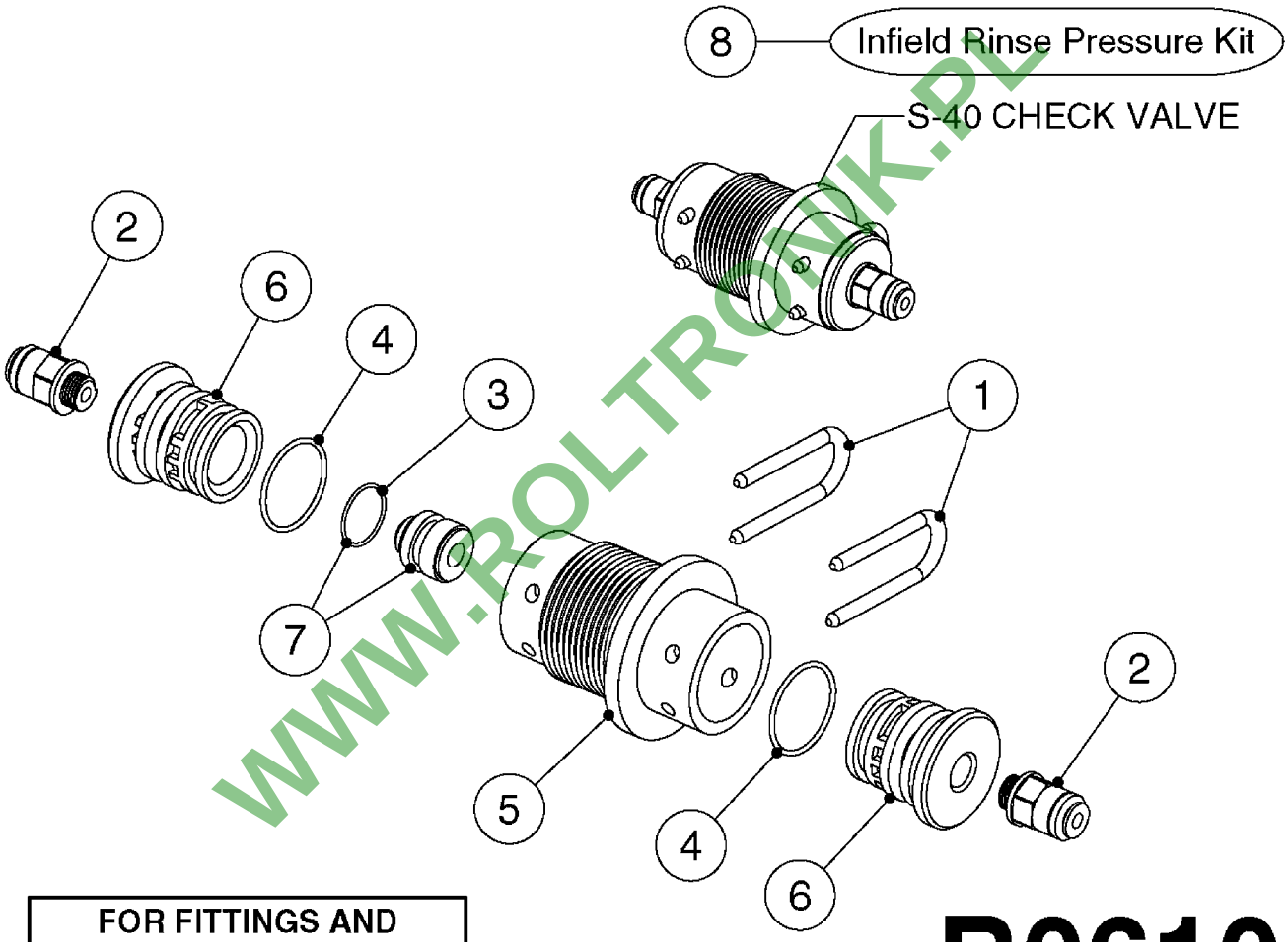

WWW.ROLTRONIK.PL

FOR FITTINGS AND HOSES, SEE SECTION L

B0610

CHECK VALVES - S40
B0610-HIN, 01:01:16

Pos.	parts-n°	order qty	description
1	145994	1	FITT.DK S-40 FORK
2	231346	1	QUICK COUPLER 1/8"BSP X 4 MM
3	241905	1	O-RING 12,3X2,4 VITON DKR.1,05
4	242355	1	O-RING D19.2X3.0 VITON F.S-40
5	322102	1	FITT.DK S-40 BULKHEAD
6	322133	1	FITT.DK S-40 PLUG W 1/8 THREAD
7	615522	1	CHECK VALVE F.FOAM MARKER
8	70036203	1	RINSE PRESSURE KIT

WWW.ROLTRONIK.PL

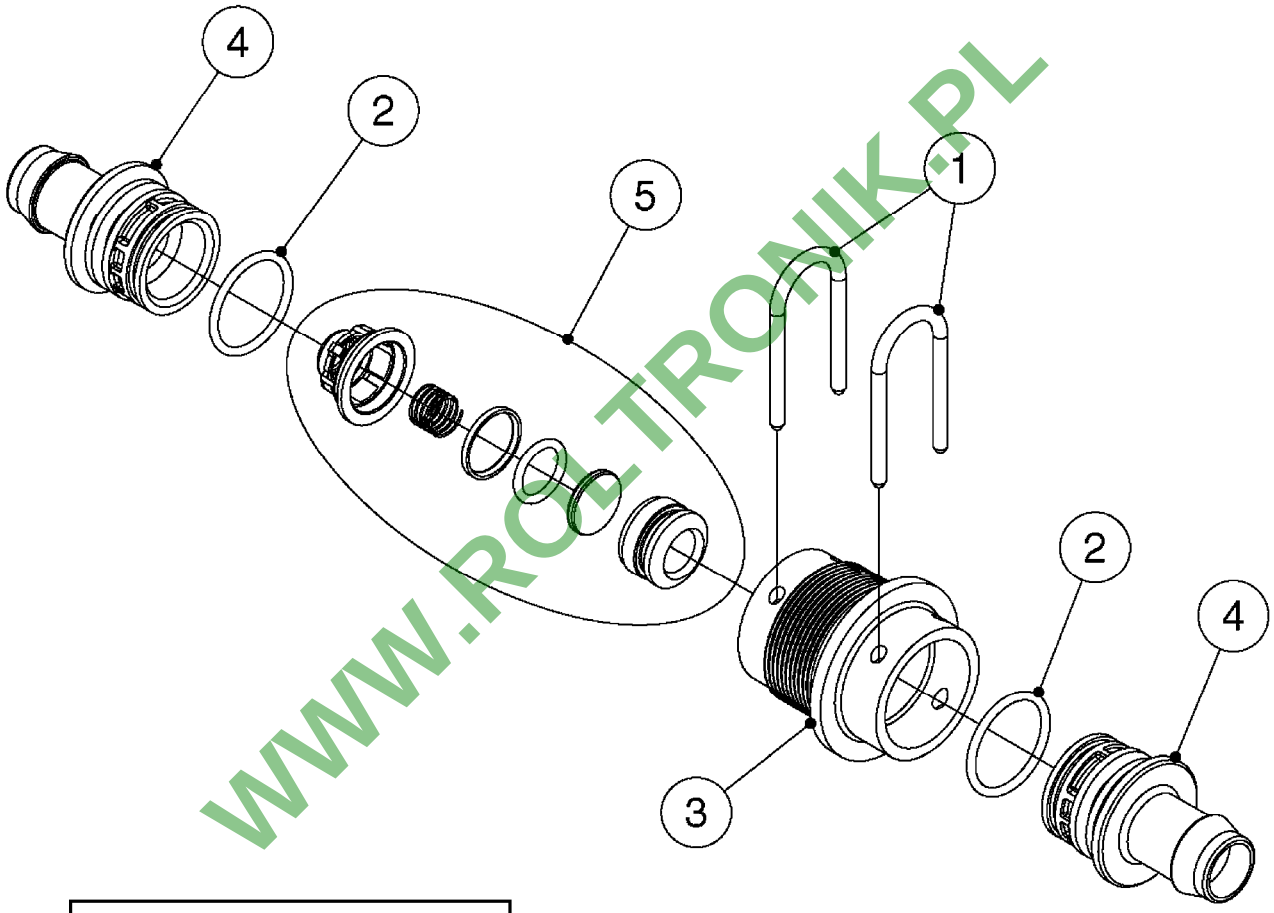

WWW.ROL-TRONIK.PL

FOR FITTINGS AND HOSES, SEE SECTION L

B0620

CHECK VALVES - S53
B0620-HIN, 01:01:16

Pos.	parts-n°	order qty	description
1	145995	1	FITT.DK S-53 FORK
2	242354	1	O-RING D32.2X3.0 VITON F.S-53
3	322103	1	FITT.DK S-53 BULKHEAD
4	334230	1	FITT.DK S-53 STR.1"
5	72132600	1	CHECK VALVE SUBASSEMBLY S53

WWW.ROLTRONIK.PL

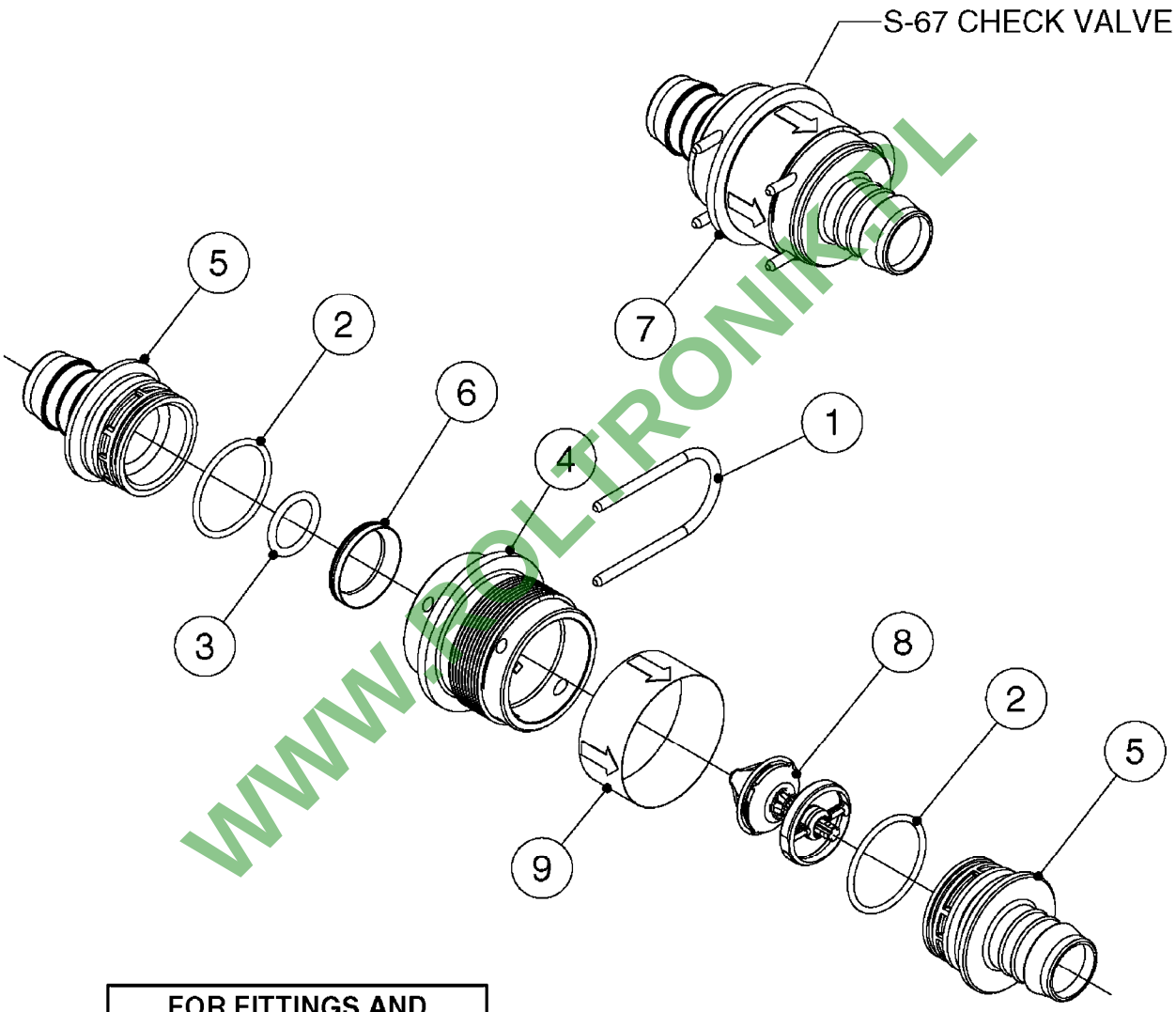

WWW.POLTRONIK.PL

FOR FITTINGS AND HOSES, SEE SECTION L

B0630

CHECK VALVES - S67
B0630-HIN, 01:01:16

Pos.	parts-n°	order qty	description
1	145996	1	FITT.DK S-67 FORK
2	242353	1	O-RING D44.2X3.0 VITON F.S-67
3	242504	1	O-RING D35x2 NITRIL
4	322104	1	FITT.DK S-67 BULKHEAD
5	334231	1	FITT.DK S-67 STR.1'
5	334232	1	FITT.DK S-67 STR.1-1/4'
6	14103100	1	SEAT F.CHECK VALVE D40.8 2010
7	72001803	1	CHCK VLV,S67, 2 X 1" HB COMPLETE IN-LINE CHECK VALVE FOR 1" HOSE
7	72206600	1	CHCK VLV,S67, 2 X 1.25" HB COMPLETE IN-LINE CHECK VALVE FOR 1-1/4" HOSE
8	72089900	1	CHECK VALVE S67 SUBASMBLY.2001
9	97800500	1	DECAL 230X28 BLACK ARROW

WWW.ROLTRONIK.PL

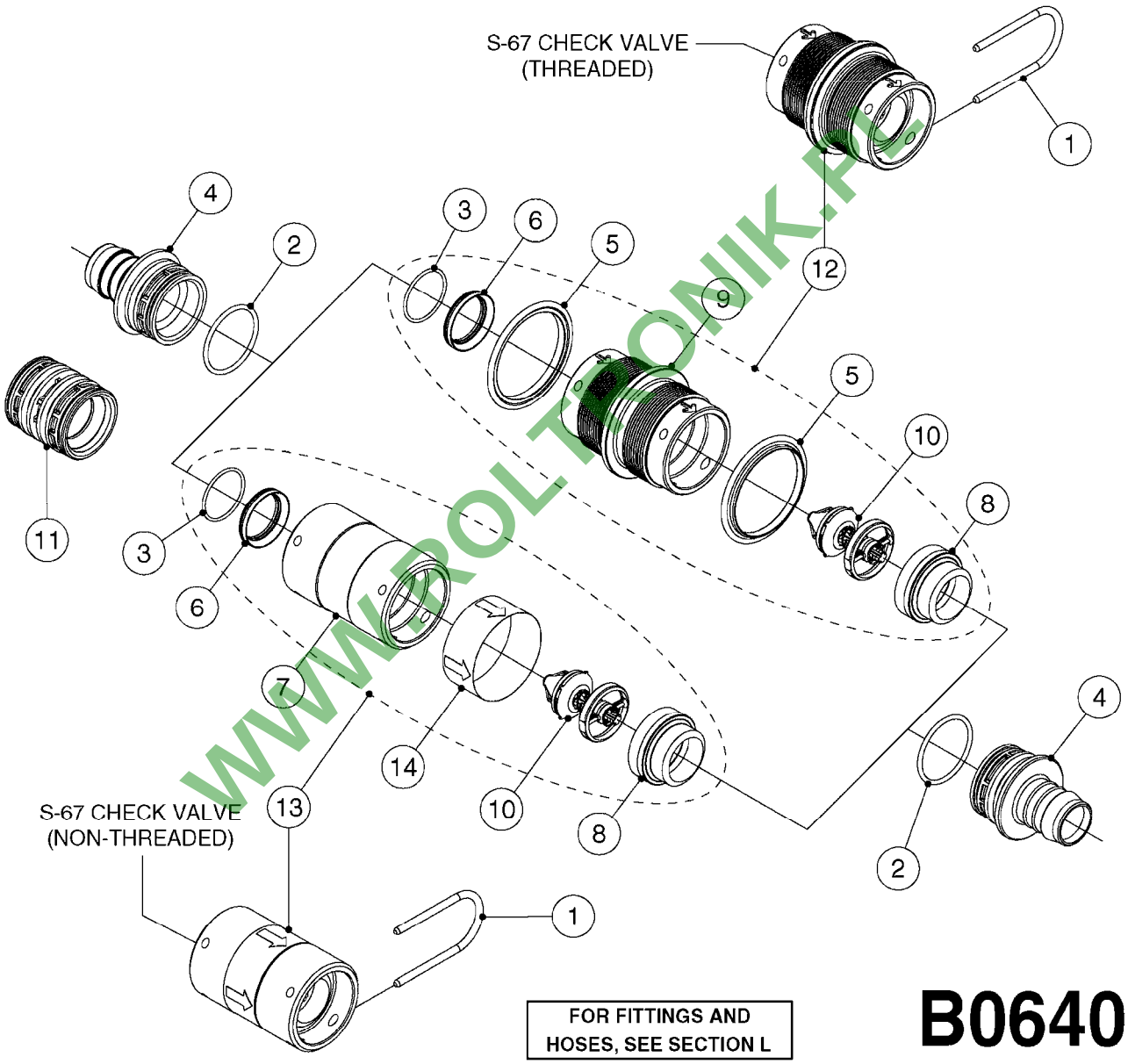

FOR FITTINGS AND HOSES, SEE SECTION L

B0640

WWW.ROLTRONIK.RU

CHECK VALVES - S67 (2011)
B0640-HIN, 01:01:16

Pos.	parts-n°	order qty	description
1	145996	1	FITT.DK S-67 FORK
2	242353	1	O-RING D44.2X3.0 VITON F.S-67
3	242504	1	O-RING D35x2 NITRIL
4	334231	1	FITT.DK S-67 STR.1'
4	334232	1	FITT.DK S-67 STR.1-1/4'
5	334261	1	GASKET F. S-67 BULKHEAD
6	14103100	1	SEAT F.CHECK VALVE D40.8 2010
7	39129600	1	HOUSING S67 CHECK VALVE NO THR
8	39129700	1	BUSHING Ø50.5X29 CHECK VALVE
9	39130400	1	HOUSING S67 CHECK VALVE THREAD
10	72089900	1	CHECK VALVE S67 SUBASMBLY.2001
11	72432400	1	FITT.DK S-67 CONNEC W.CHK SEAT
12	72746000	1	CHECK VALVE S67 2011 THREADED
13	72746100	1	CHECK VALVE S67 2011 NO THREAD
14	97800500	1	DECAL 230X28 BLACK ARROW

WWW.ROLTRONIK.PL

HARDI	**Agroparts: www.HARDI-INTERNATIONAL.com**	
	EASY CLEAN FILTER B0720-HIN, 01:01:16	Page 0 Date 16.03.2016 13:54

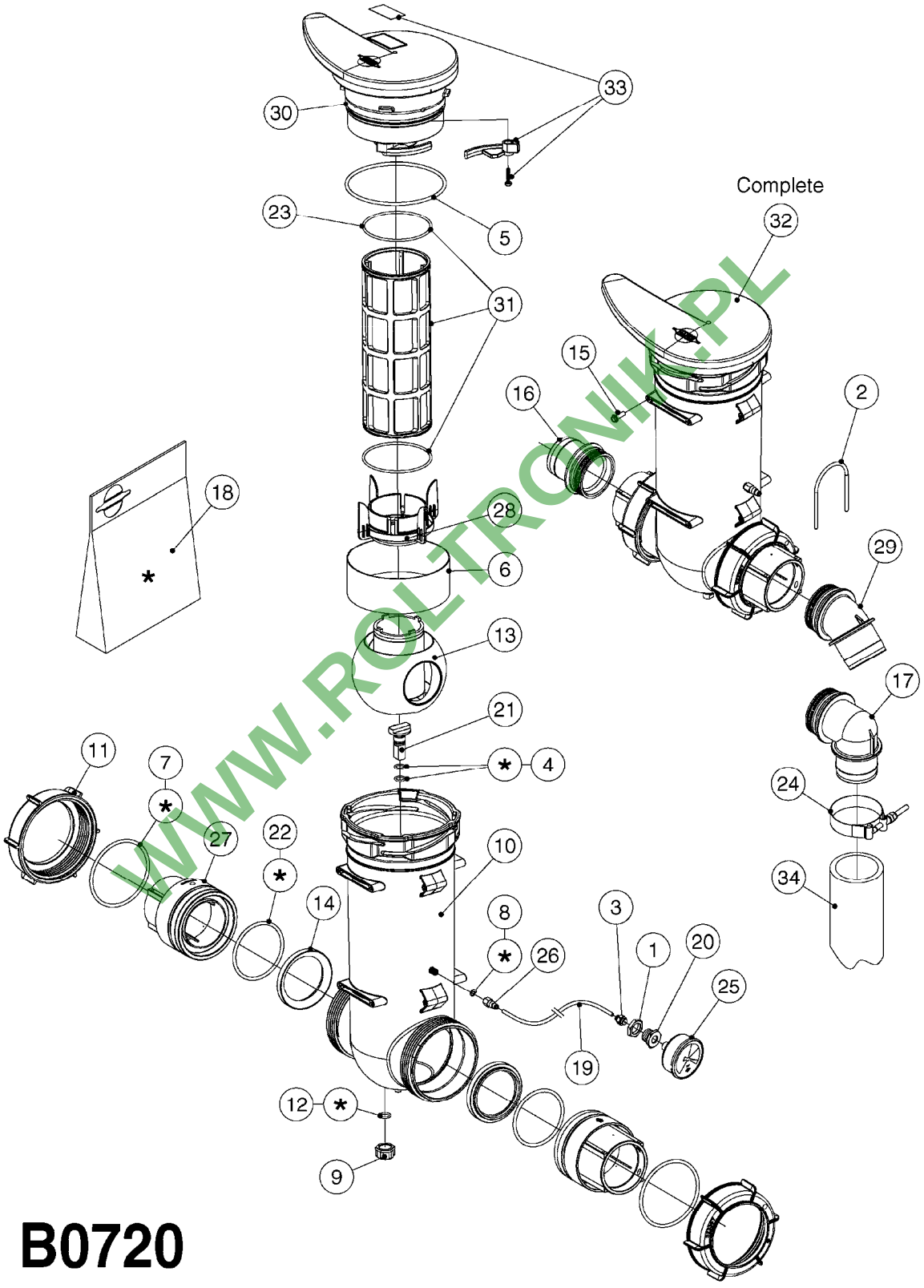

WWW.ROLTRONIK.PL

B0720

EASY CLEAN FILTER
B0720-HIN, 01:01:16

Date 16.03.2016 13:54

Pos.	parts-n°	order qty	description
1	140766	1	NUT 1/2" BSP
2	145997	1	FITT.DK S-93 FORK
3	231346	1	QUICK COUPLER 1/8"BSP X 4 MM
4	240936	1	O-RING D13.3X2.4 NITRIL
5	242570	1	O-RING D150.0 x5.0 SH70 VITON
6	242572	1	RUBBER BELT Ø160x1.5 B=60 EPDM
7	242573	1	O-RING Ø104.14X5.33SH70 NITRIL
8	242593	1	GASKET Ø8/Ø5x1 (PA) 266N-M5X1
9	320047	1	FITT.DK CAPNUT 1/2" BSP
10	322356	1	EASYCLEAN FILTER HOUSING
11	322357	1	CAP F. COUPLER EASYCLEAN FILTE
12	330212	1	O-RING D19/D14X2.4 F.1/2"NUT
13	391090	1	BALL F. EASYCLEAN FILTER ON/OF
14	391091	1	SEAL F. BALL EASYCLEAN FILTER
15	440698	1	SCREW F.PLASTIC 6X18 SS HEXHD
16	727133	1	FITT. S93 2-1/2" STR. S W/O-RI
17	727226	1	FITT. S93 2-1/2" 90° S W/O-RIN
18	741826	1	SEAL KIT F. EASYCLEAN FILTER
19	927253	1	AIR HOSE, DIAMETER 4MM
20	14055400	1	FITT.DK REDUC 1/2"x1/8"x1/4"BS
21	14117700	1	SPINDLE S93 L46 NV13 SS
22	24260100	1	O-RING Ø88.0X5.0 SH70 VITON
23	24260700	1	O-RING Ø101.19X3.53 SH70 VITON
24	28030303	1	CLAMP HOSE T-BOLT S2.5" 235-76
25	28053400	1	GAUGE VACUUM SUCT. FILTER NCM
26	28054300	1	QUICK COUPLER 1/8"BSP/Ø4 FEMAL
27	33503200	1	HOSE COUPLER F. EASYCLEAN FILT
28	33503600	1	FILTER CARRIER F. EASYCLEAN
29	72072900	1	FITT.S93 2-1/2" 45°PVC W/ORING
30	72270600	1	LID ASSM. EASYCLEAN FILTER
31	72278800	1	FILTER 30 MESH GREEN D110/284
31	72278900	1	FILTER 50 MESH BLUE D110/284
31	72279000	1	FILTER 80 MESH RED D110/284
32	72318900	1	EASYCLEAN FILTER COMPL.
33	74192800	1	FILTER LOCK PARTS - EASYCLEAN
34	92702803	1	HOSE PVC SUCT GRAY 2.5"

WWW.ROLTRON.PL

HARDI	**Agroparts: www.HARDI-INTERNATIONAL.com**	
	PRESSURE FILTER - CYCLONE B0730-HIN, 01:01:16	Page 0 Date 16.03.2016 13:54

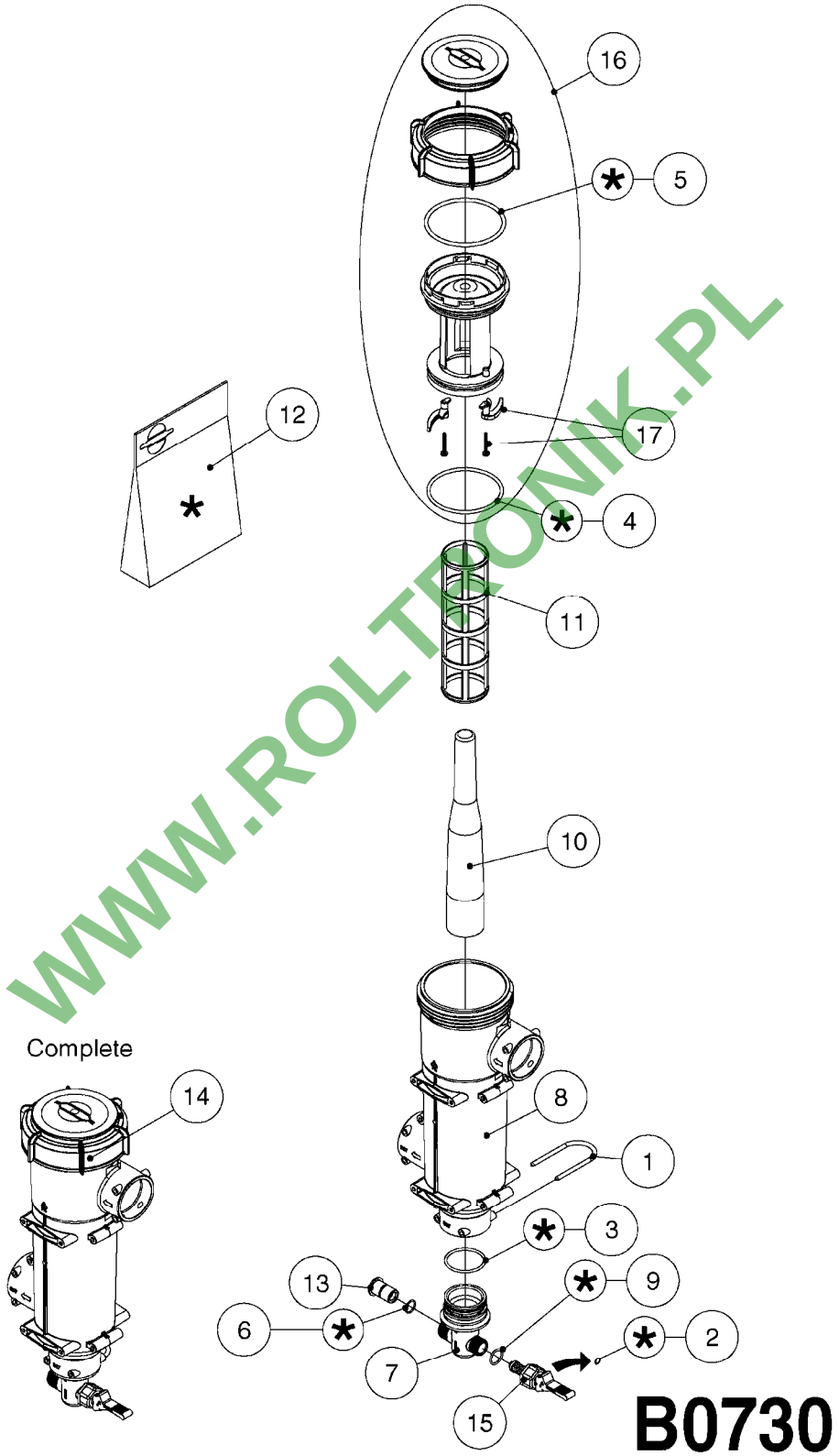

WWW.ROLTRONIK.PL

PRESSURE FILTER - CYCLONE
B0730-HIN, 01:01:16

Pos.	parts-n°	order qty	description
1	145996	1	FITT.DK S-67 FORK
2	241323	1	O-RING D5.3X2.4 NITRIL
3	242353	1	O-RING D44.2X3.0 VITON F.S-67
4	242565	1	O-RING Ø 85 X 4.0 SH70 VITON
5	242577	1	O-RING Ø 86 X 4.5 SH70 VITON
6	242594	1	O-RING D14 X 1.78 SCH.70-EPDM
7	322358	1	T-PIECE S67-1/2"-3/4"
8	322359	1	CYCLONE FILTER HOUSING
9	330315	1	O-RING D18.4/D13X.6
10	391093	1	CONE F. CYCLONE FILTER
11	61036000	1	FILTER ELEM.S93,100 MSH-YELLOW
11	615416	1	FILTER ELEM.S93,50 MESH-BLUE
11	72557200	1	FILTER ELEM.S93,80# CYCLONE
12	741827	1	SEAL KIT CYCLONE FILTER
13	39127500	1	VALVE SEAT
14	72281200	1	CYCLONE FILT.COMP. 80 MSH S67
14	72316500	1	CYCLONE FILT.COMP.50 MSH S67
14	72316600	1	CYCLONE FILT.COMP.100 MSH S67
15	72281300	1	VALVE BOOSTER/ON/OFF CYCLONE F
16	72352200	1	LID COMPLETE F. CYCLONE FILTER
17	74192900	1	FILTER LOCK PARTS - CYCLONE

WWW.ROLTRONIK.PL

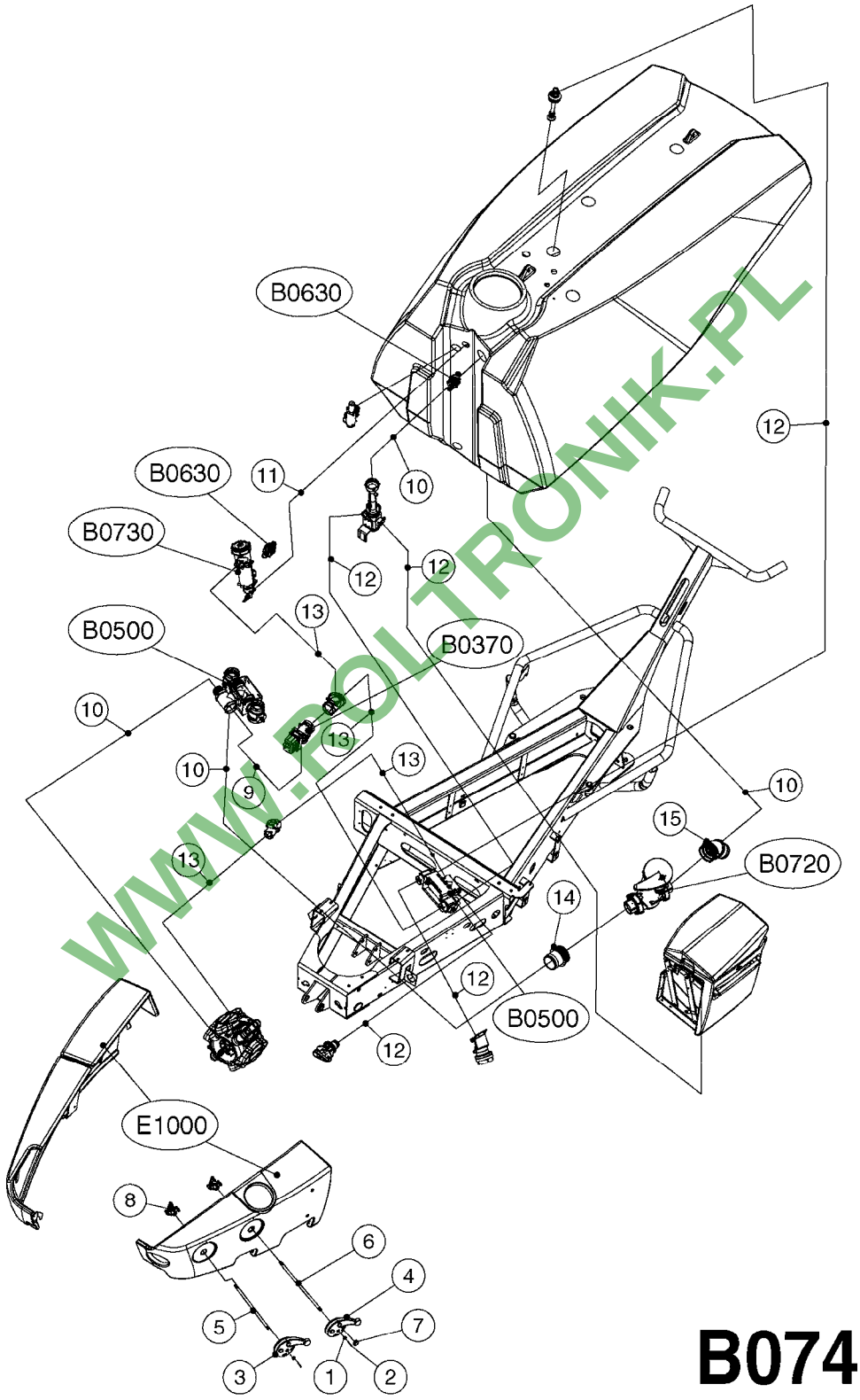

WWW.POLTRONIK.PL

B0740

NCM 4400/6600 MANIFOLD
B0740-HIN, 01:01:16

Date 16.03.2016 13:54

Pos.	parts-n°	order qty	description
1	334594	1	PLUG F.VALVE HANDLE BLACK
2	411006	1	SCREW M4X40 SLOTTED
3	741844	1	VALVE HANDLE ASSY. SUCTION NCM
4	741845	1	VALVE HANDLE ASSY. PRESSUR NCM
5	14038100	1	AXLE FOR SUCTION VALVE HANDLE
6	14038200	1	AXLE FOR PRESSURE VALVE HANDLE
7	33505200	1	PLUG FOR SMART VALVE HANDLE
8	72283000	1	AXLE JOINT F. SMARTVALVE HANDL
9	92702703	1	HOSE PVC SUCT GRAY 2"
10	92702803	1	HOSE PVC SUCT GRAY 2.5"
11	92703203	1	HOSE R X3/4" X300PSI WP X0012"
12	92712403	1	HOSE R X1" X300PSI WP X0012"
13	92734403	1	HOSE R X5/4" X200PSI WP X0012"
14	727133	1	FITT. S93 2-1/2" STR. S W/O-RI
15	72072900	1	FITT.S93 2-1/2" 45°PVC W/ORING

WWW.ROLTRONIK.PL

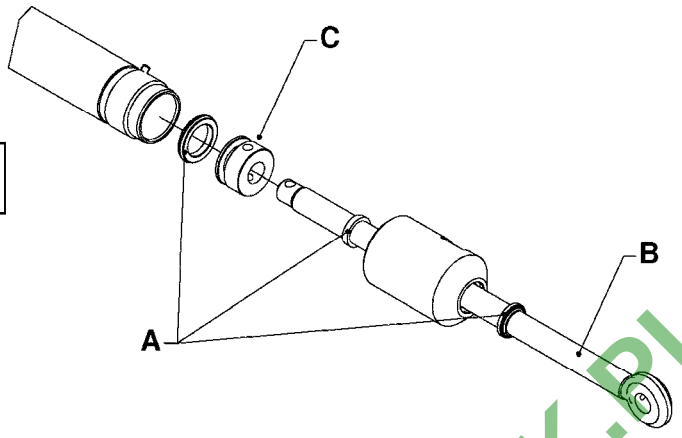

Check cylinder barrel for stamped part number.

		A	B	C
781030		750247	615030	146443
781031		750248	615040	146484
781033		750248	615174	146484
781035		750247	146610	146443
	781038	750247	615210	146443
781039		750250	615656	147254
	781041	750253	615232	146749
	781043	750251	615210	146858
781044		750248	615316	146484
781045		750273	615358	146443
	781047	750251	615363	146858
	781051	750273	615570	146443
781052		750273	147127	146443
781053		750273	147151	146443
781058		750251	615643	146858
781060		750250	615656	147254
781065		750273	147127	146443
781067		755695	147468	147469
781078		750251	615643	146858
781080		750247	147601	146443
781083		755697	616065	147463
781084		750247	616070	146443
781087		750689	147127	146858
781090		750669	61003600	14005600

		A	B	C
781093		750693	14018900	14022200
781096		750691	61025200	14015500
781097		750691	61022800	14015500
781100		750692	14022400	14038500
781107		750713	14028900	14024100
781109		750713	14029100	14024100
781111		750713	14029100	14024100
781113		750714	61028900	14038400
781115		750709	61029200	14029700
781116		750712	14030200	14038400
781118		750710	14030600	14029700
781119		750710	14030700	14029700
781121		750711	14030900	14029700
781122		750711	14030900	14029700
781123		750711	14031100	14029700
781124		750711	14031100	14029700
781126		750710	14036200	
781127		750709	61033600	
781130		750715	61031000	14027500
781132		750668	63039300	
781138		750715	61038000	14027500
781139		750725	615656	
781141		750724	61022800	
78100003		750691	61022800	14008203

WWW.ROLTRONIK.PL

parts-nº	order qty	description
146443	1	HYDR.PISTON D49.8/23.0 L=35
146484	1	HYDR.PISTON D39.8/18.0 L=25
146610	1	PISTON ARM F.CYL Ø50/25-150
146749	1	PISTON RING F.D70/50-700
146858	1	HYDR.PISTON D59.8/23.0 L=35
147127	1	PISTON BAR Ø30,0 - 385MM
147151	1	PISTON BAR D30.0 - 585MM
147254	1	HYDR.PISTON D25/12 L=12
147463	1	PISTON RING F.D70/40
147468	1	ROD CYLINDER F. 781067 HYD CYL
147469	1	PISTON F. 781067 HYD CYL
147601	1	PISTON ARM F. CYL. Ø25 L=348
615030	1	PISTON BAR D 50/25-300
615040	1	PISTON ARM F.CYL Ø40/20-120
615174	1	PISTON ROD F. HY CYLINDER
615210	1	HINGE PIN W.FORK L=1015
615232	1	PISTON ARM F.CYL Ø70/50-700
615316	1	PISTON ARM F. CYL. D40/20-500
615358	1	PISTON ARM F.CYL Ø50/30-500
615363	1	PISTON ARM F.CYL Ø25 L=1315
615570	1	CYLINDER ROD F.HY CYL.781051
615643	1	PISTON BAR 060-25 - 830MM
615656	1	PISTON BAR FOR 025/12-50
616065	1	PISTON ARM F. CYL. Ø40/400
616070	1	PIST ARM Ø50/25L=300alt781113
750247	1	SEAL KIT F.HY CYL.781030/35/38
750248	1	SEAL KIT F.HY CYL.781031/33
750250	1	SEAL KIT F.HY CYL.781039
750251	1	SEAL KIT F.HY CYL.
750253	1	SEAL KIT F.HY CYL.781041
750273	1	GASKET SET F.HY-CYL 781051-52
750668	1	SEAL KIT F.HY DAMPER 781089
750669	1	SEAL KIT F.HY CYL. 781090
750689	1	SEAL KIT F.HY CYL.781087
750691	1	SEAL KIT F HY CYL.781095/96/97
750692	1	SEAL KIT F.HY CYL.781100
750693	1	SEAL KIT F.HY CYL.781093
750709	1	GASKET SET F.781115/25
750710	1	SEAL KIT F.HY CYL.781118/19/20
750711	1	SEAL KIT F.781121/22/23/24
750712	1	SEAL KIT F.781116
750713	1	SEAL KIT F HY CYL.781103/6/7/8
750714	1	SEAL KIT F.HY CYL.781113/14/17
750715	1	SEAL KIT F.HY CYL.781105/30/38
750724	1	SEAL KIT F.HY CYL.781141
750725	1	SEAL KIT F.HY CYL.781131-39
755695	1	SEAL KIT F. HYD CYL 781067
755697	1	SEAL KIT F.HY CYL.781083
781030	1	DOUBLE CYLINDER D 50/25-300
781031	1	CYLINDER D40/20-120
781033	1	DOUBLE CYLINDER D 40/20-300
781035	1	CYLINDER DOUBLE Ø50/25-150
781038	1	CYLINDER Ø50/25-900
781039	1	CYL D25/12-50 172MM alt 781139
781041	1	CYLINDER DOUBLE Ø70/50-700
781043	1	CYLINDER DOUBLE D60/25-900
781044	1	CYLINDER DOUBLE D40/20-300
781045	1	CYLINDER DOUBLE Ø50/30-500
781047	1	CYLINDER Ø60/25-1200
781051	1	CYLINDER DOUBLE Ø50/30-600
781052	1	CYL DOUB D50/30-300 78121600

WWW.PDTRONIK.PL

parts-n°	order qty	description
781053	1	CYL F INN WING FLD alt 781107
781058	1	CYLINDER 60/25 X 725 CM PAR LH
781060	1	CYLINDER D25/12-50 L=210mm
781065	1	CYLINDER F.WING TILT
781067	1	CYL DOUB D50/30-300 78121600
781078	1	CYLINDER 60/25 X 725 CM PAR RH
781080	1	DOB.CYL.D50/25-250
781083	1	CYLINDER DOUBLE D70/40-400
781084	1	CYLINDER D50/25 L=300
781087	1	CYL DOUB 60/30-300 alt 781100
781090	1	CYL DBLD32/16-200W
781093	1	CYLINDER FOLD SPC D60/30 L=300
781096	1	CYLINDER 60/25 X 662 NAV PAR
781097	1	CYLINDER 60/25 X 725 CM PAR
781100	1	CYLINDER DOUBLE 60/30-300
781107	1	DOBCYL50/30-500/M24X2 78121200
781109	1	DOUBLE CYLINDER D 50/30-300
781111	1	CYL DOUB D50/30-300 78121600
781113	1	DOUBLE CYLINDER D 50/25-300
781115	1	DOUBLE CYLINDER D 40/20-300
781116	1	CYLINDER DOUBLE D50/25-298
781118	1	CYLINDER 40/20 L=180
781119	1	DOUBLE CYLINDER D 40/20-300
781121	1	CYLINDER D40/22-300 BLACK
781122	1	CYLINDER 40/22X300MM RED
781123	1	CYLINDER D40/22-300 BLACK
781124	1	CYLINDER 40/22X300MM RED
781126	1	CYLINDER D40/20-120
781127	1	CYLINDER D40/20-120
781130	1	CYLINDER DOUBL. D70/40-320
781132	1	CYL.STAB CM1200 04 78126000
781138	1	CYLINDER DOUBL. D70/40-265
781139	1	CYLINDER D25/12-50
781141	1	CYLINDER 60/25 X 635 DELTA PAR
14005600	1	HYDR.PISTON D32.0/16.0 L=25
14008203	1	HYD. CYLINDER PISTON CM+750
14015500	1	HYDR.PISTON D60.0/25.0 L=40
14018900	1	PISTON ARM F. CYL. Ø30 L=420
14022200	1	HYDR.PISTON D59.4/20.0 L=34.9
14022400	1	PISTON ARM F. CYL. Ø60 L=412
14024100	1	HYDR.PISTON D49.4/20.0 L=35
14027500	1	HYDR.PISTON D69.4/24.0 L=35
14028900	1	CYLINDER ROD D30.0 L=609.0
14029100	1	CYLINDER ROD D30.0 L=409.0
14029700	1	HYDR.PISTON D38.0/16.0 L=25
14030200	1	CYLINDER ROD D25.0 L=398
14030600	1	CYLINDER ROD D20.0 L=281.0
14030700	1	CYLINDER ROD D20.0 L=401
14030900	1	CYLINDER ROD D22.0 L=401
14031100	1	CYLINDER ROD D22.0 L=439/M22
14036200	1	CYLINDER ROD D20.0 L=221.0
14038400	1	HYDR.PISTON D49.4/20.0 L=34.9
14038500	1	PISTON HYD. CYL. Ø60/Ø25
61003600	1	CYLINDER ROD F. 781090
61022800	1	PISTON ARM F.CYL.Ø60/25L=856.5
61025200	1	PISTON ARM F.CYL.Ø60/25L=786.5
61028900	1	PISTON ARM F.CYL.Ø50/25-300
61029200	1	PISTON ROD F. HY CYLINDER
61031000	1	CYLINDER ROD FOR D70/40 - 320
61033600	1	PISTON ARM F.CYL.Ø40/20 L=120
61038000	1	CYLINDER ROD FOR D70/40

WWW.ROLTRONIK.PL

parts-n°	order qty	description
63039300	1	CYLINDER ROD F.781132
78100003	1	CYL. PARA-LIFT CM+750 W/STOP

WWW.ROLTRONIK.PL

Check cylinder barrel for stamped part number.

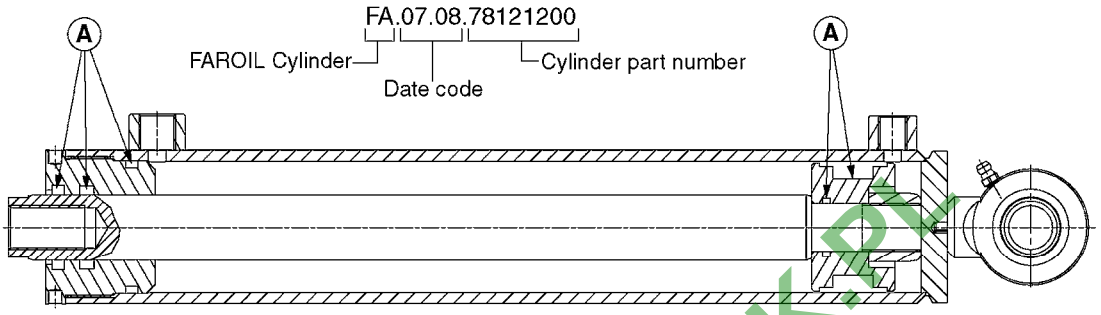

FAROIL cylinders directly replace the cylinders in the chart below. Seal kits **(A)** are for FAROIL cylinders only. Seal kits for replaced cylinders can be found on pages C0010 and C0020.

FAROIL Cylinder #	Replaces Cylinder #	FAROIL Seal Kit (A)
78120000	781001	75075900
78120100	781011	75076000
78120200	781034	75075900
78120300	781040	75076100
78120500	781093	75074600
78120600 (LH)	781096*	28117300
78120700 (LH)	781097*	28117300
78120800	781100	75075400
78121000	-	75075500
78121200	781107	75074500
78121400	781109	75075200
78121600	781111	75074500
78121800	781113	75074400
78122000	781115	75074300
78122100	781116	75074400
78122300	781118	75074300
78122400	781119	75074300
78122600	781121	75075000
78122700	781122	75075000

FAROIL Cylinder #	Replaces Cylinder #	FAROIL Seal Kit (A)
78122800	781123	75075000
78122900	781124	75075000
78123100	781126	75074300
78123200	781127	75074300
78123300 (LH)	78115000*	75075500
78124100 (RH)	78115100*	75075500
78124200**	781139	75074800
78124300 (LH)	781141*	28117300
78124600	781115	75074300
78125100 (RH)	78115000*	75075500
78125300 (LH)	78115100*	75075500
78125500 (RH)	781096*	28117300
78125600 (RH)	781097*	28117300
78125700 (RH)	781141*	28117300
78126000	781132	75074900
78126400	781090	75076500
78128000	78120500	75074600
78128800	78121200	75075200

*Replaced by separate left and right cylinders.
** Only available as 72531000 (78124200 with fittings).

WWW.ROLTRONIK.PL

parts-n°	order qty	description
781001	1	CYL.TELESCOPING Ø50/40/25_1100
781011	1	CYLINDER TELESC.70/60/40
781034	1	HY. CYLINDER D50/40/25 - 1200
781040	1	CYLINDER 60/50/30 1100MM
781090	1	CYL DBLD32/16-200W
781093	1	CYLINDER FOLD SPC D60/30 L=300
781096	1	CYLINDER 60/25 X 662 NAV PAR
781097	1	CYLINDER 60/25 X 725 CM PAR
781100	1	CYLINDER DOUBLE 60/30-300
781107	1	DOBCYL50/30-500/M24X2 78121200
781109	1	DOUBLE CYLINDER D 50/30-300
781111	1	CYL DOUB D50/30-300 78121600
781113	1	DOUBLE CYLINDER D 50/25-300
781115	1	DOUBLE CYLINDER D 40/20-300
781116	1	CYLINDER DOUBLE D50/25-298
781118	1	CYLINDER 40/20 L=180
781119	1	DOUBLE CYLINDER D 40/20-300
781121	1	CYLINDER D40/22-300 BLACK
781122	1	CYLINDER 40/22X300MM RED
781123	1	CYLINDER D40/22-300 BLACK
781124	1	CYLINDER 40/22X300MM RED
781126	1	CYLINDER D40/20-120
781127	1	CYLINDER D40/20-120
781132	1	CYL.STAB CM1200 04 78126000
781139	1	CYLINDER D25/12-50
781141	1	CYLINDER 60/25 X 635 DELTA PAR
28117300	1	SEAL KIT 78120600/07/43
72531000	1	CYL. D25/12-50/78124200 W/FITT
75074300	1	SEALKIT78122000/23-25/30-32/46
75074400	1	SEAL KIT 78121800/21/44
75074500	1	SEALKIT78121100-13/15/16/36/48
75074600	1	SEAL KIT 78120500/49
75074800	1	SEAL KIT 78123400/42
75074900	1	SEAL KIT 78123700
75075000	1	SEAL KIT 78122600/27/28/29
75075200	1	SEAL KIT 78120900/14/50
75075400	1	SEAL KIT 78120800
75075500	1	SEAL KIT 78121000/33/41/51/53
75075900	1	SEAL KIT FOR 78120000 & 78120200
75076000	1	SEAL KIT 78120100
75076100	1	SEAL KIT 78120300
75076500	1	SEAL KIT 78126400
78115000	1	DBL CYL D70/40-320 AIRING
78115100	1	CYL DOB.D70/40-265 AIR INLET R
78120000	1	CYL.TELESCOPING Ø50/40/25_1100
78120100	1	CYLINDER TELESC.70/60/40
78120200	1	HY. CYLINDER D50/40/25 - 1200
78120300	1	CYLINDER 60/50/30 1100MM
78120500	1	CYLINDER FOLD SPC D60/30 L=300
		NLA - REPLACED BY 78128000
78120600	1	CYLINDER 60/25 X 662 NAV PAR L
78120700	1	CYLINDER 60/25 X 725 CM PAR L
78120800	1	CYLINDER DOUBLE 60/30-300
78121000	1	CYLINDER DOUBLE D70/40-400
78121200	1	CYLINDER, D50/30-500
78121400	1	CYLINDER DOUBLE D50/30-300
78121600	1	CYLINDER DOUBLE D50/30-300
78121800	1	CYLINDER D50/25 L=300
78122000	1	CYLINDER DOUBLE Ø40/20-300 0°
78122100	1	CYLINDER DOUBLE D50/25-298
78122300	1	DOB.CYL.D40/20_180

WWW.PCZ-TRONIK.PL

parts-n°	order qty	description
78122400	1	DOUBLE CYLINDER D 40/20-300
78122600	1	CYLINDER D40/22-300 BLACK
78122700	1	CYLINDER 40/22X300MM RED
78122800	1	CYLINDER D40/22-300 BLACK
78122900	1	CYLINDER 40/22X300MM RED
78123100	1	CYLINDER D40/20-120
78123200	1	CYLINDER D40/20-120
78123300	1	DBL CYL D70/40-320 AIR INLET L
78124100	1	CYL DOB.D70/40-265 AIR INLET R
78124200	1	CYLINDER D25/12-50
78124300	1	CYLINDER 60/25 X 635 DELTA L
78124600	1	CYLINDER DOUBLE Ø40/20-300 90°
78125100	1	DBL CYL D70/40-320 AIR INLET R
78125300	1	CYL DOB.D70/40-265 AIR INLET L
78125500	1	CYLINDER 60/25 X 662 NAV PAR R
78125600	1	CYLINDER 60/25 X 725 CM PAR R
78125700	1	CYLINDER 60/25 X 635 DELTA R
78126000	1	CYLINDER,DAMPNER,LOCKING
78126400	1	CYLINDER DBLE D32/16-200 W.STP
78128000	1	CYLINDER DOUB. D60/30 L=300 09
78128800	1	CYLINDER, D50/30-500

WWW.ROLTRONIK.PL

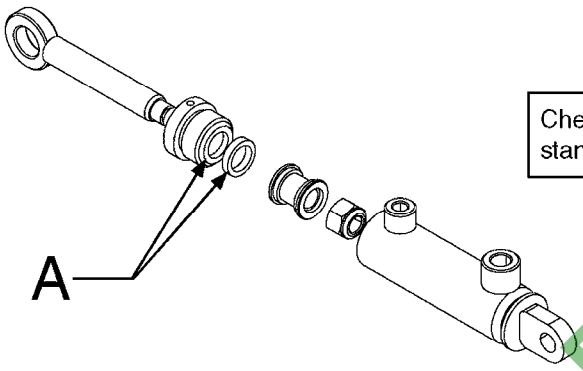

Check cylinder barrel for stamped part number.

	A
781136	28064100
781137	28064200
78114300	75083800
78120000	75075900
78120100	75076000
78120200	75075900
78120300	75076100
78120400	75074200
78120500	75074600
78120600	28117300
78120700	28117300
78120800	75075400
78121000	75075500
78121200	75074500
78121300	75074500
78121400	75075200
78121600	75074500
78121800	75074400
78122000	75074300
78122100	75074400

	A
78122300	75074300
78122400	75074300
78122600	75075000
78122700	75075000
78122800	75075000
78122900	75075000
78123000	75074300
78123100	75074300
78123200	75074300
78123400*	75074800
78123700	75074900
78124100	75075500
78124300	28117300
78124400	75074400
78124500	75076400
78124600	75074300
78125100	75075500
78125300	75075500
78125500	28117300
78125800	75076400

	A
78126000	75074900
78126400	75076500
78126500	75074800
78127200	75084400
78127800	75084500
78128000	75074600
78128100	75084700
78128500	75084900
78128700	75075200
78128800	75075200
78129900	75074300
78130600	75074400
78130900	75085400
78131000	75075400
78131100	75085500

* Only available as 72320300 (78123400 with spring lock & fittings).

WWW.ROL-TRONIK.PL

parts-n°	order qty	description
781136	1	HYDRAULIC SHOCK NCM4400 SUSP.
781137	1	HYDRAULIC SHOCK NCM6600 SUSP.
28064100	1	GASKET SET FOR CYL. 781136
28064200	1	GASKET SET FOR CYL. 781137
28117300	1	SEAL KIT 78120600/07/43
72320300	1	HYD. CYL. STEERING LOCK CM "05
75074200	1	SEAL KIT 78120400
75074300	1	SEALKIT78122000/23-25/30-32/46
75074400	1	SEAL KIT 78121800/21/44
75074500	1	SEALKIT78121100-13/15/16/36/48
75074600	1	SEAL KIT 78120500/49
75074800	1	SEAL KIT 78123400/42
75074900	1	SEAL KIT 78123700
75075000	1	SEAL KIT 78122600/27/28/29
75075200	1	SEAL KIT 78120900/14/50
75075400	1	SEAL KIT 78120800
75075500	1	SEAL KIT 78121000/33/41/51/53
75075900	1	SEAL KIT FOR 78120000 & 78120200
75076000	1	SEAL KIT 78120100
75076100	1	SEAL KIT 78120300
75076400	1	SEAL KIT 78124500 & 78125800
75076500	1	SEAL KIT 78126400
75083800	1	SEAL KIT F.78114300
75084400	1	SEAL KIT FOR 78127200/7500
75084500	1	SEAL KIT FOR 78127800
75084700	1	SEAL KIT FOR 78128100
75084900	1	SEAL KIT FOR 78128500
75085400	1	SEAL KIT FOR 78130900
75085500	1	SEAL KIT F.HY CYL. 78131100
78114300	1	CYLINDER 70/30 X 662 LG PAR R
78120000	1	CYL.TELESCOPING Ø50/40/25_1100
78120100	1	CYLINDER TELESC.70/60/40
78120200	1	HY. CYLINDER D50/40/25 - 1200
78120300	1	CYLINDER 60/50/30 1100MM
78120400	1	CYLINDER DBLE D32/16-200 W.STP
78120500	1	CYLINDER FOLD SPC D60/30 L=300
78120600	1	CYLINDER 60/25 X 662 NAV PAR L
78120700	1	CYLINDER 60/25 X 725 CM PAR L
78120800	1	CYLINDER DOUBLE 60/30-300
78121000	1	CYLINDER DOUBLE D70/40-400
78121200	1	CYLINDER, D50/30-500
78121300	1	CYLINDER DBLE Ø50/30-600(700)
78121400	1	CYLINDER DOUBLE D50/30-300
78121600	1	CYLINDER DOUBLE D50/30-300
78121800	1	CYLINDER D50/25 L=300
78122000	1	CYLINDER DOUBLE Ø40/20-300 0°
78122100	1	CYLINDER DOUBLE D50/25-298
78122300	1	DOB.CYL.D40/20_180
78122400	1	DOUBLE CYLINDER D 40/20-300
78122600	1	CYLINDER D40/22-300 BLACK
78122700	1	CYLINDER 40/22X300MM RED
78122800	1	CYLINDER D40/22-300 BLACK
78122900	1	CYLINDER 40/22X300MM RED
78123000	1	CYLINDER D40/20-120
78123100	1	CYLINDER D40/20-120
78123200	1	CYLINDER D40/20-120
78123400	1	CYLINDER FOR TRACK LOCK, NCM
78123700	1	CYLINDER,DAMPNER,LOCK 78126000
78124100	1	CYL DOB.D70/40-265 AIR INLET R
78124300	1	CYLINDER 60/25 X 635 DELTA L
78124400	1	CYLINDER DOUBLE D50/25_250

WWW.PCLTRONIK.PL

parts-n°	order qty	description
78124500	1	CYLINDER 70/30 X 662 LG PAR L
78124600	1	CYLINDER DOUBLE Ø40/20-300 90°
78125100	1	DBL CYL D70/40-320 AIR INLET R
78125300	1	CYL DOB.D70/40-265 AIR INLET L
78125500	1	CYLINDER 60/25 X 662 NAV PAR R
78125800	1	CYLINDER 70/30 X 662 LG PAR R
78126000	1	CYLINDER,DAMPNER,LOCKING
78126400	1	CYLINDER DBLE D32/16-200 W.STP
78126500	1	CYLINDER D25/12-50 FAROIL NNAV
78127200	1	CYLINDER DOUB. D40/25 L=455
78127800	1	HYDRAULIC CYLINDER 25-40
78128000	1	CYLINDER DOUB. D60/30 L=300 09
78128100	1	CYLINDER 70/30-300/TILT TDZ
78128500	1	CYLINDER DOUBLE PLUNGER D60X75
78128700	1	CYLINDER DOUBLE D50/30 500
78128800	1	CYLINDER, D50/30-500
78129900	1	CYLINDER DOUBLE D40/20 180 1/4
78130600	1	DOB.CYL.Ø50/25-240/M. SENSOR
78130900	1	CYLINDER, D70/40-500 TDZ FOLD
78131000	1	CYLINDER, 60/30X462, 120' SPC
78131100	1	HY. CYLINDER, 70/40X400

WWW.ROLTRONIK.PL

HARDI	**Agroparts: www.HARDI-INTERNATIONAL.com**	
	HYD.BLOCK EAGLE/FORCE PRE 2012 C0570-HIN, 01:01:16	Page 0 Date 16.03.2016 13:54

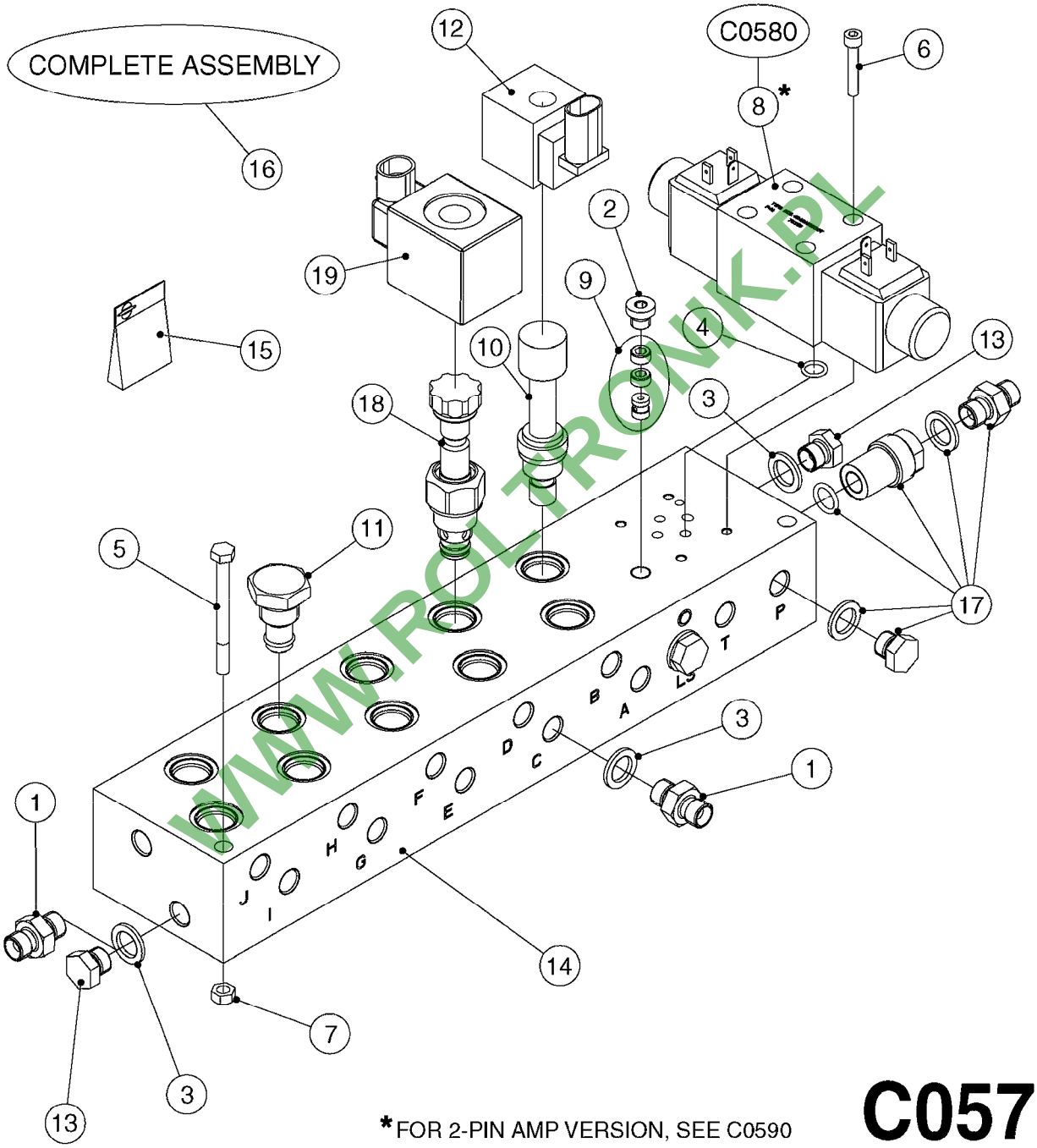

WWW.ROL-TRONIK.PL

*FOR 2-PIN AMP VERSION, SEE C0590

C0570

HYD.BLOCK EAGLE/FORCE PRE 2012
C0570-HIN, 01:01:16

Pos.	parts-n°	order qty	description
1	146845	1	HEX NIPPLE 1/4"X1/4"
1	146851	1	HEX NIPPLE 1/4"x1/4" 0.7MM
1	147498	1	HEX NIPPLE 1/4"-1/4" 1.2mm
2	231987	1	PLUG 1/8' BSP W/GASKET
3	241404	1	DOWTY SEAL 1/4"
4	242102	1	O-RING Ø9.25X1.78 NITRIL 90SH
5	420847	1	BOLT HEX 8.8 DEL M8X85
6	450964	1	SCREW M5X30 F.CYLINDER
7	460143	1	NUT HEX M8 LOCK A2 DIN985
8	782116	1	MAGNET VLV.MD1L-S3/10N-D12K1/P
9	782124	1	SWITCH VALVE OUTS.1/8" 5000PSI
10	782129	1	SOLENOID VALVE 25L, 3/4"NC
11	782131	1	BLIND PLUG F.3/4" CARTR.VALVE
12	782135	1	SOLENOID W. AMP F.VALVE 782129
13	14010400	1	PLUG 1/4" BSP
14	14098600	1	HYD. BLOCK SPC/FTZ 3/4" 2010
15	28047800	1	SEAL KIT F.782129
15	75083900	1	SEAL KIT F. 782129/78215500
16	72679100	1	HY.BLOCK BOOM HYDR. FTZ 2010
17	74191700	1	ADJ. FLOW VALVE REPAIR KIT DHP
18	78215500	1	HY SOLENOID VALVE 40L 3/4"NC
19	78602100	1	MAGNET M.AMP/DIODE KIT 08

WWW.ROLTRONIK.PL

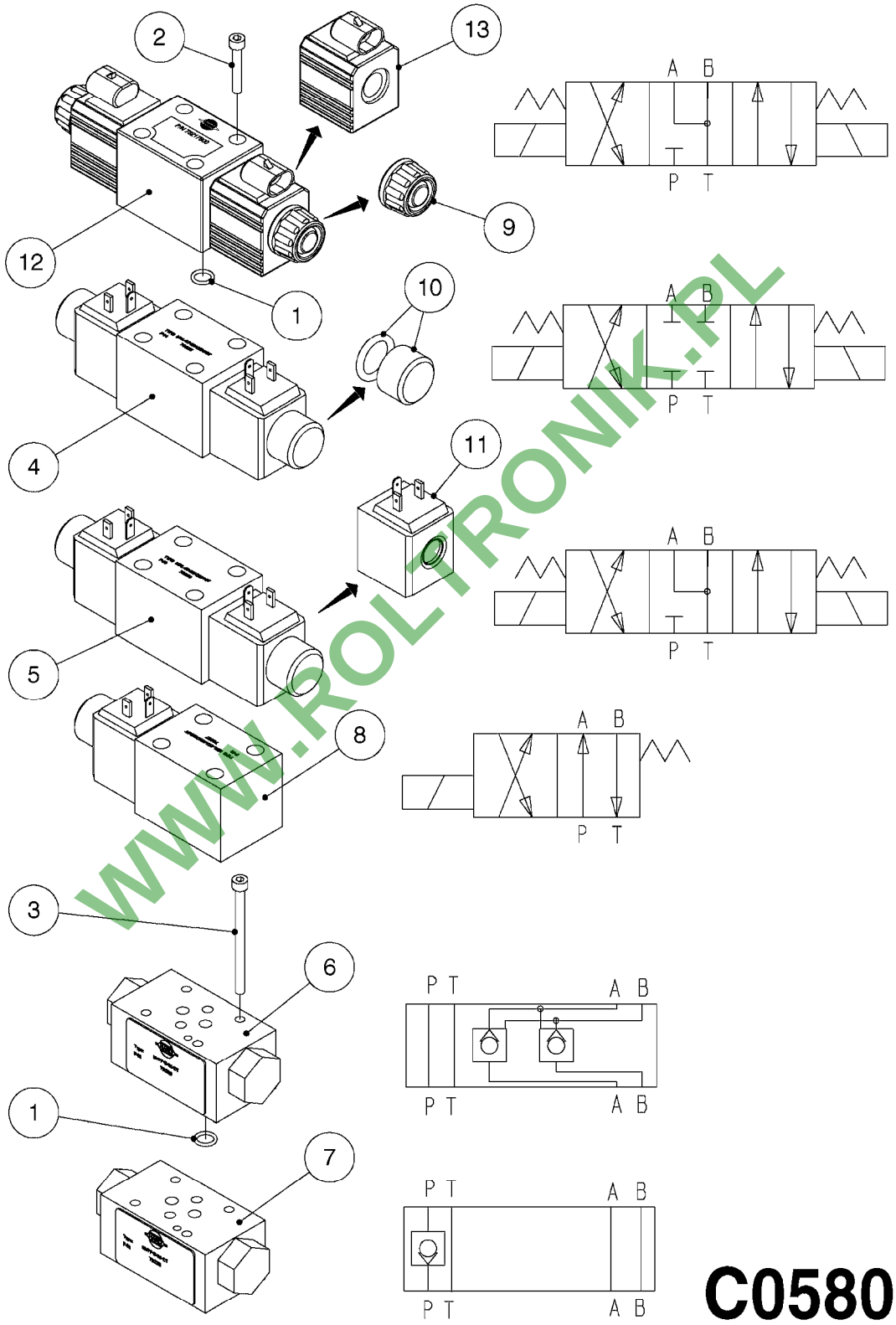

WWW.ROLTRONIK.PL

C0580

CETOP VALVES
C0580-HIN, 01:01:16

Pos.	parts-n°	order qty	description
1	242102	1	O-RING Ø9.25X1.78 NITRIL 90SH
2	450964	1	SCREW M5X30 F.CYLINDER
3	450965	1	SCREW ROUND M5X70
4	782115	1	HY SOLENOID VALVE DH HYD
5	782116	1	MAGNET VLV.MD1L-S3/10N-D12K1/P
6	782118	1	LOCK VALVE MVPP-D
7	782146	1	HYD. CHECK VALVE 1 WAY
8	782829	1	SOLENOID MD1L-TA/10N-D12K1/DT
9	28123700	1	CAP F.SOLENOID - MD1L
10	74187700	1	CAP + O-RING F.CETOP - MD1L
11	78216000	1	SOLENOID F.CETOP VALVE - MD1L
12	78217800	1	MAGNET VLV.MD1L-S3/10N-D12K8DT
13	78218200	1	SOLENOID W/AMP F.MD1L

WWW.ROLTRONIK.PL

HARDI	**Agroparts: www.HARDI-INTERNATIONAL.com**	
	HYD.BLOCK EAGLE/FORCE 2012 C0590-HIN, 01:01:16	Page 0 Date 16.03.2016 13:54

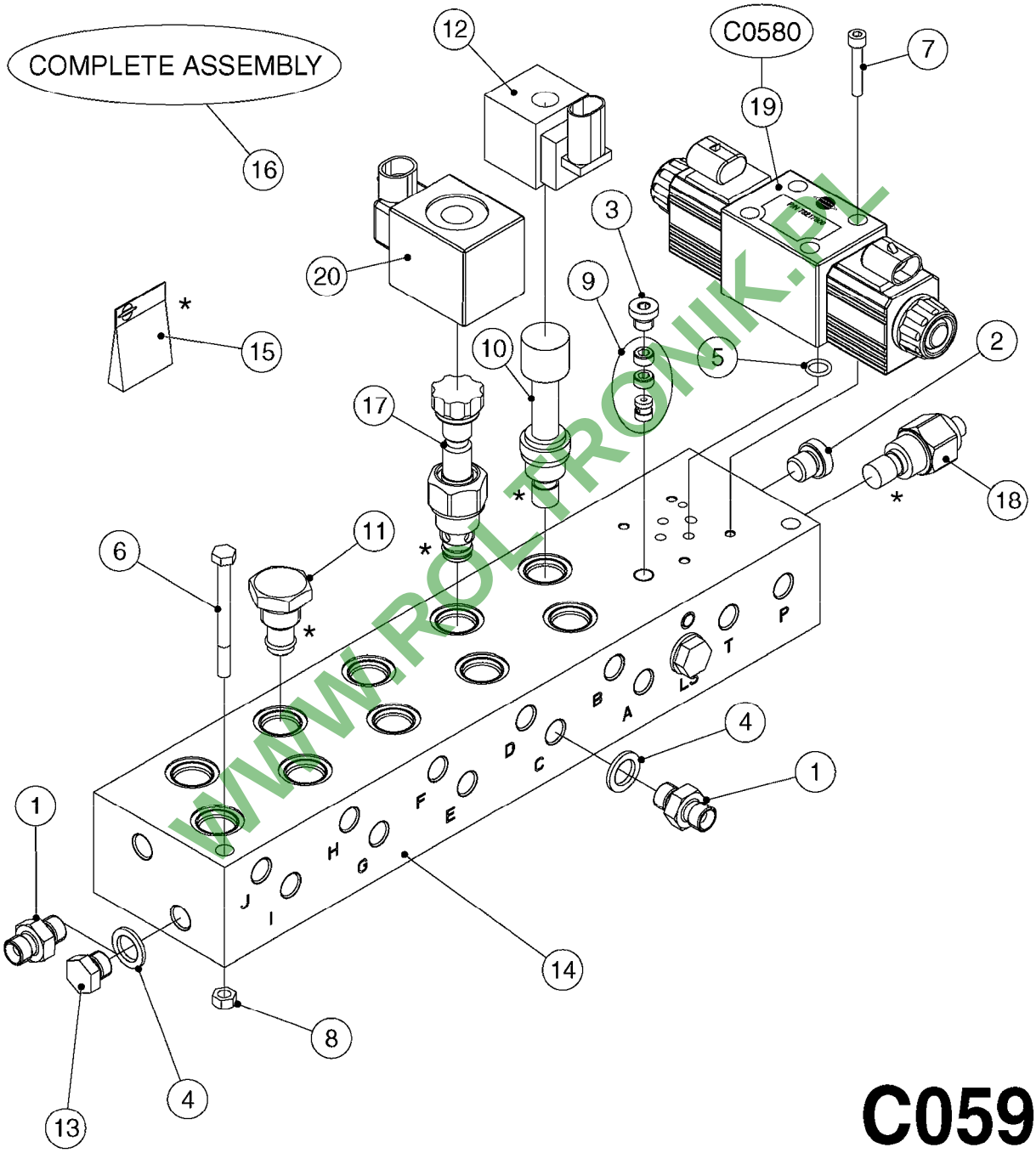

WWW.ROL-TRONIK.PL

C0590

Pos.	parts-n°	order qty	description
1	146845	1	HEX NIPPLE 1/4"X1/4"
1	146851	1	HEX NIPPLE 1/4"x1/4" 0.7MM
1	23234500	1	HEX NIPPLE 1/4" - 9/16"
2	231103	1	PLUG 1/4" BSP, O-RING 08BPUP04
3	231987	1	PLUG 1/8' BSP W/GASKET
4	241404	1	DOWTY SEAL 1/4"
5	242102	1	O-RING Ø9.25X1.78 NITRIL 90SH
6	420847	1	BOLT HEX 8.8 DEL M8X85
7	450964	1	SCREW M5X30 F.CYLINDER
8	460143	1	NUT HEX M8 LOCK A2 DIN985
9	782124	1	SWITCH VALVE OUTS.1/8" 5000PSI
10	782129	1	SOLENOID VALVE 25L, 3/4"NC
11	782131	1	BLIND PLUG F.3/4" CARTR.VALVE
12	782135	1	SOLENOID W. AMP F.VALVE 782129
13	14010400	1	PLUG 1/4" BSP
14	14098600	1	HYD. BLOCK SPC/FTZ 3/4" 2010
15	75083900	1	SEAL KIT F. 782129/78215500 * UNIVERSAL KIT FOR VALVE OR PLUG
16	70084403	1	HYD. BLOCK, 5P, FOLD/FLOW
17	78215500	1	HY SOLENOID VALVE 40L 3/4"NC
18	78216800	1	FLOW REGULATING VALVE, 3/4"
19	78217800	1	MAGNET VLV.MD1L-S3/10N-D12K8DT
20	78602100	1	MAGNET M.AMP/DIODE KIT 08

WWW.ROLTOMK.PL

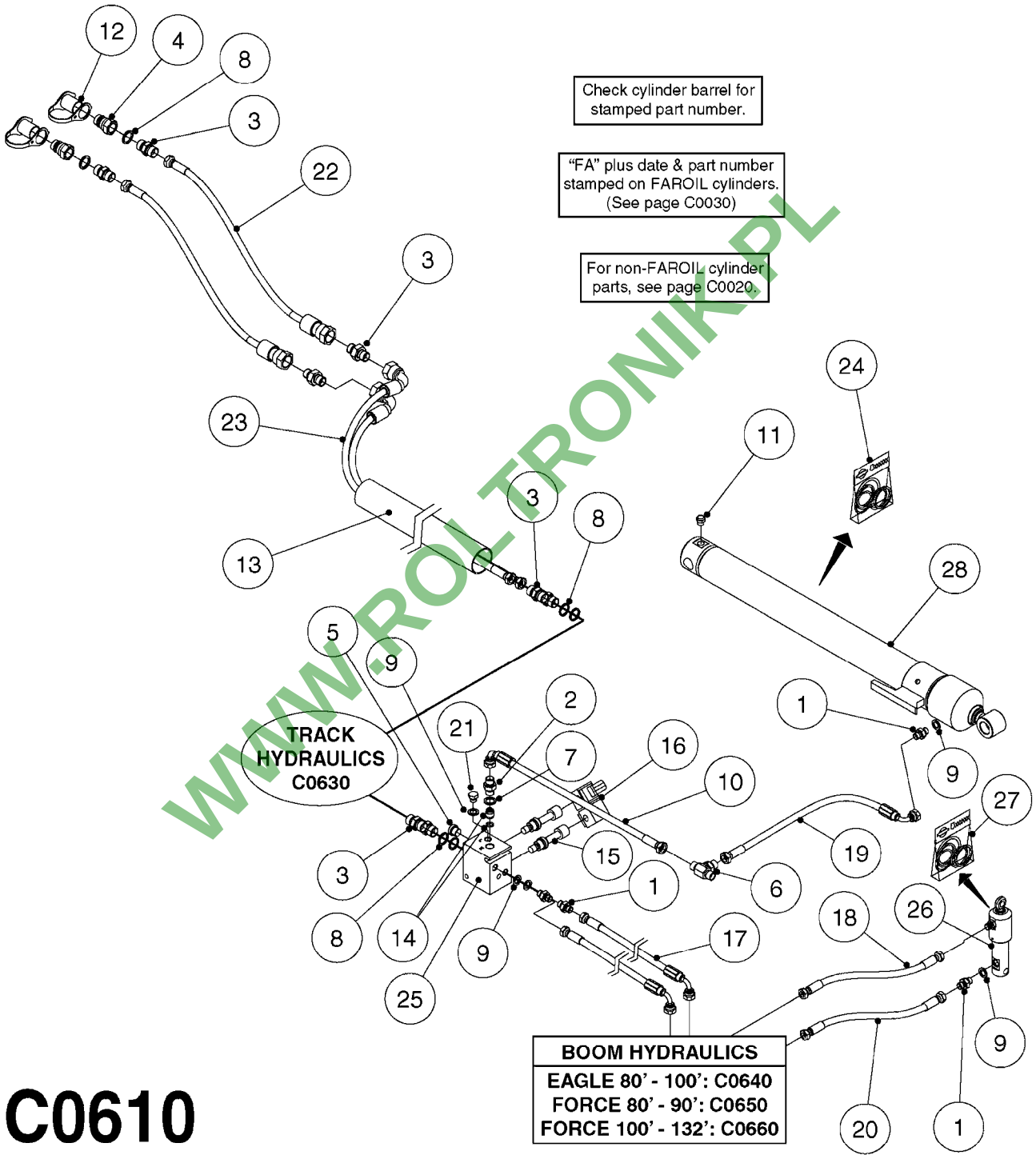

C0610

WWW.ROL-TRONIK.PL

BASIC HYDRAULICS NCM 4400/6600
C0610-HIN, 01:01:16

Pos.	parts-nº	order qty	description
1	146845	1	HEX NIPPLE 1/4"X1/4"
2	146850	1	HEX NIPPLE 3/8"x3/8" - 1.8mm
3	147132	1	HEX NIPPLE 1/2"X1/2" BSP DEL
4	230311	1	QUICK COUPLING 1/2"
5	231924	1	PLUG 3/8'
6	232057	1	T-PIECE 3/8" BSP HY.
7	240866	1	DOWTYSEAL 3/8"
8	241356	1	DOWTYSEAL 1/2"
9	241404	1	DOWTY SEAL 1/4"
10	284020	1	HYD.HOSE-3/8-L=900-STR/ELB
11	284265	1	PLUG BREATHER 1/4" F/CYLINDER
12	334206	1	DUST HOOD FOR HY-COUPLING
13	341333	1	TUBE Ø57/Ø52 L=1500 BLACK PE
14	782062	1	NON-RETURN VALVE UTV 3/8"
15	782129	1	SOLENOID VALVE 25L, 3/4"NC
16	782135	1	SOLENOID W. AMP F.VALVE 782129
17	784016	1	HYDRAULIC HOSE 1/4' - 4200MM
18	784033	1	HOSE HY X 1/4" X 61.0"STR+ELB
19	784151	1	HOSE HY 1/4 3/8 OML X 79" S+E
19	784152	1	HOSE HY 1/4 3/8 OML X 106" S+E
20	784161	1	HOSE HY X 1/4 X 59" STR+STR
21	14010400	1	PLUG 1/4" BSP
22	28052100	1	HOSE HY X 1/2" X 122.0"STR+STR
23	28053600	1	HOSE HY X 1/2" X 100.4"STR+ELB
24	28117300	1	SEAL KIT 78120600/07/43
25	70078103	1	HYD. BLOCK COMP. PARA-LIFT 1.8
26	72531000	1	CYL. D25/12-50/78124200 W/FITT
27	75074800	1	SEAL KIT 78123400/42
28	78120600	1	CYLINDER 60/25 X 662 NAV PAR L CYLINDER FOR LEFT SIDE
28	78125500	1	CYLINDER 60/25 X 662 NAV PAR R CYLINDER FOR RIGHT SIDE

WWW.RO-TRONIK.PL

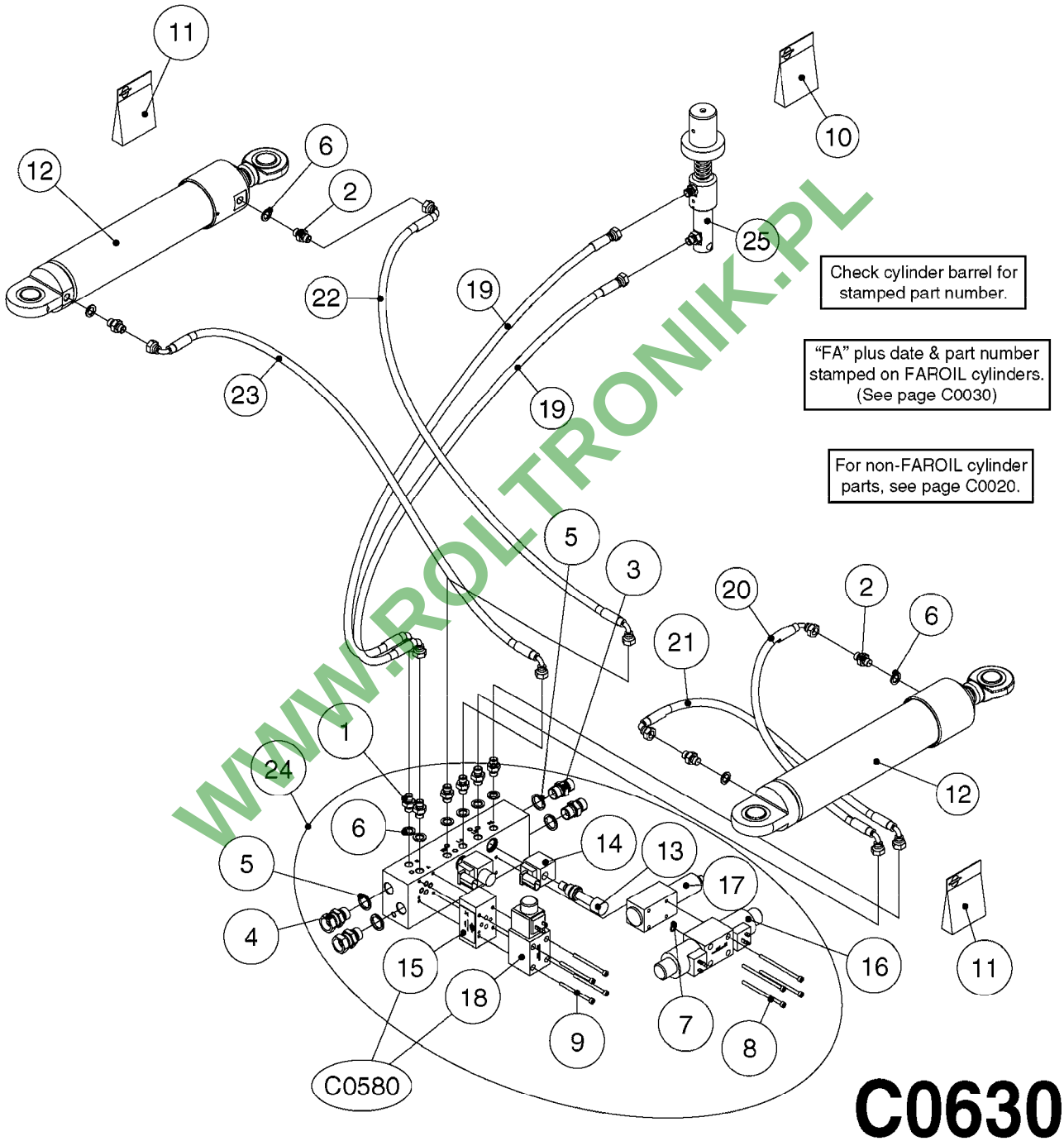

WWW.ROLTRONIK.PL

C0630

Pos.	parts-n°	order qty	description
1	146845	1	HEX NIPPLE 1/4"X1/4"
2	146851	1	HEX NIPPLE 1/4"x1/4" 0.7MM
3	147132	1	HEX NIPPLE 1/2"X1/2" BSP DEL
4	232289	1	NIPPLE 1/2" W. 1/2" UNION DEL
5	241356	1	DOWTYSEAL 1/2"
6	241404	1	DOWTY SEAL 1/4"
7	242102	1	O-RING Ø9.25X1.78 NITRIL 90SH
8	450952	1	SCREW M5 X 90 10.9
9	450965	1	SCREW ROUND M5X70
10	750250	1	SEAL KIT F.HY CYL.781039
11	75075500	1	SEAL KIT 78121000/33/41/51/53
12	78123300	1	DBL CYL D70/40-320 AIR INLET L NCM 4400 - LEFT SIDE
12	78124100	1	CYL DOB.D70/40-265 AIR INLET R NCM 6600 - RIGHT SIDE
12	78125100	1	DBL CYL D70/40-320 AIR INLET R NCM 4400 - RIGHT SIDE
12	78125300	1	CYL DOB.D70/40-265 AIR INLET L NCM 6600 - LEFT SIDE
13	782129	1	SOLENOID VALVE 25L, 3/4"NC
14	782135	1	SOLENOID W. AMP F.VALVE 782129
15	782146	1	HYD. CHECK VALVE 1 WAY
16	782151	1	MAGNET V PLUG DSE3-C26/10N-D12
17	782152	1	2 WAY MODULAR COMPENSATOR
18	782829	1	SOLENOID MD1L-TA/10N-D12K1/DT
19	784005	1	HOSE HY X 1/4 X 037.38"STR+ELB
20	784155	1	HOSE HY 1/4 X 17" ELB+ELB 90°
21	784156	1	HOSE HY 1/4 X 17" ELB+ELB 270°
22	784157	1	HOSE HY 1/4 X 32" ELB+ELB 90°
23	784158	1	HOSE HY 1/4 X 32" ELB+ELB 270°
24	72290400	1	HYD. BLK COMP STEERING CM "05
25	72320300	1	HYD. CYL. STEERING LOCK CM "05

WWW.PO-TRONIK.PL

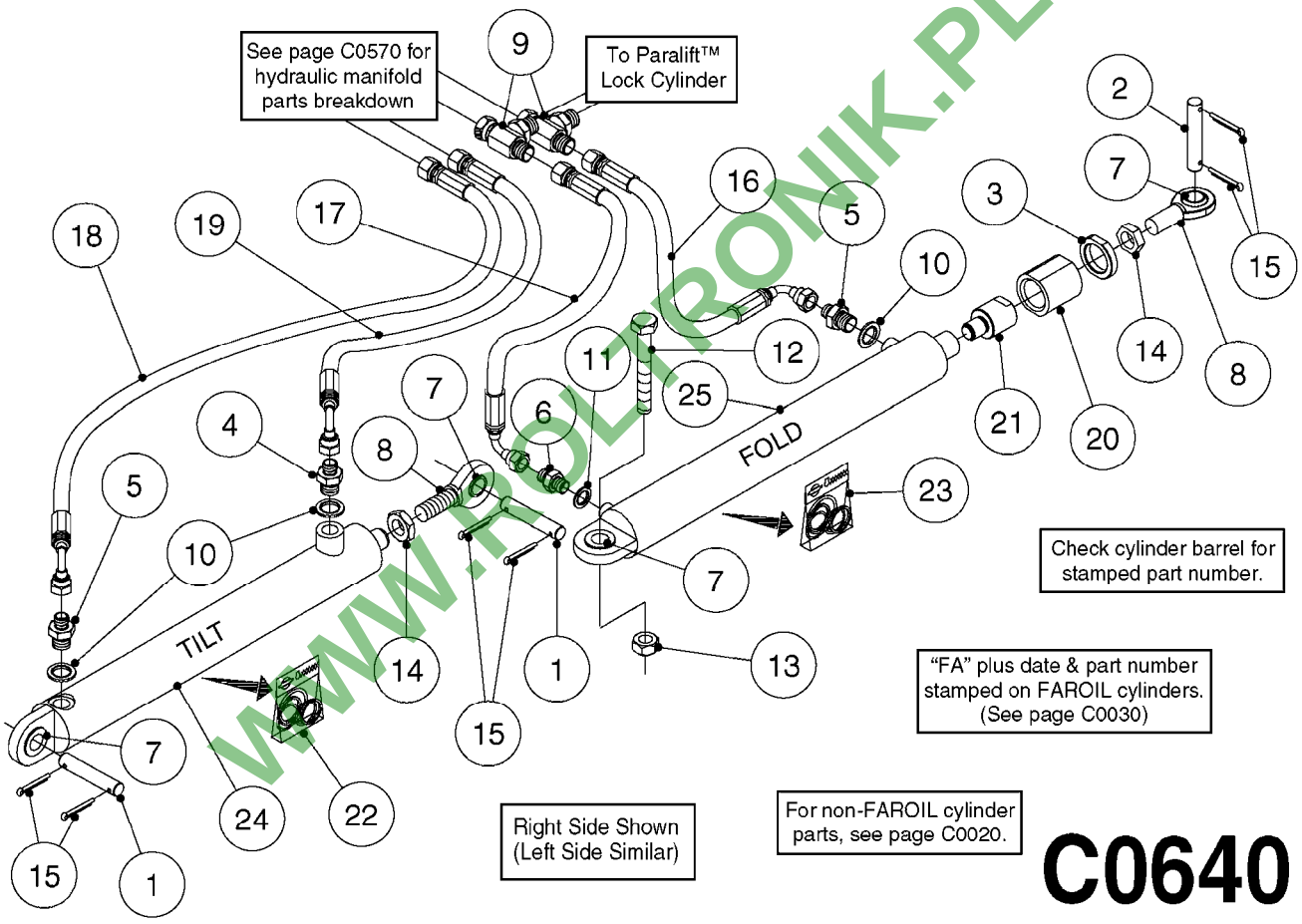

C0640

WWW.ROLTRONIK.PL

Pos.	parts-n°	order qty	description
1	146450	1	PIN D19.8 X 75 WITH 2 X D5
2	146589	1	PIN D19.8 X 65
3	146672	1	NUT HEX LOCK F.ADJUSTER
4	146835	1	HEX NIPPLE 1/4" - 3/8" BSP
5	146839	1	HEX NIPPLE 1/4"X3/8" BSP 0.7MM
6	146845	1	HEX NIPPLE 1/4"X1/4"
7	210730	1	BEARING F.LINK HEAD M20
8	210881	1	LINK HEAD GAR 20 DO
9	232109	1	FITT.HY TEE 1/4'BSP UNION
10	240866	1	DOWTYSEAL 3/8"
11	241404	1	DOWTY SEAL 1/4"
12	430910	1	BOLT HEX 8.8 DEL M20X110
13	460806	1	NUT HEX M20X2.5 LOCK
14	461200	1	NUT HEX M20X1.5 JAMB.
15	480384	1	PIN COTTER 3/16 x 1-1/2"
16	784008	1	HOSE HY X 1/4" X 98.4"STR+ELB
17	784025	1	HOSE HY X 1/4" x 86.6"STR+ELB
18	784072	1	HOSE,HY.1/4" L=2000 E-E A=270°
19	784073	1	HOSE,HY.1/4" L=2300 E-E A=270°
20	14023000	1	BUSHING Ø50.0/36.0 L=52 DEL
21	14031800	1	ADAPTOR F.HY CYLINDER L=40
22	75074400	1	SEAL KIT 78121800/21/44
23	75074600	1	SEAL KIT 78120500/49
24	78122100	1	CYLINDER DOUBLE D50/25-298
25	78128000	1	CYLINDER DOUB. D60/30 L=300 09

WWW.ROLTRONIK.PL

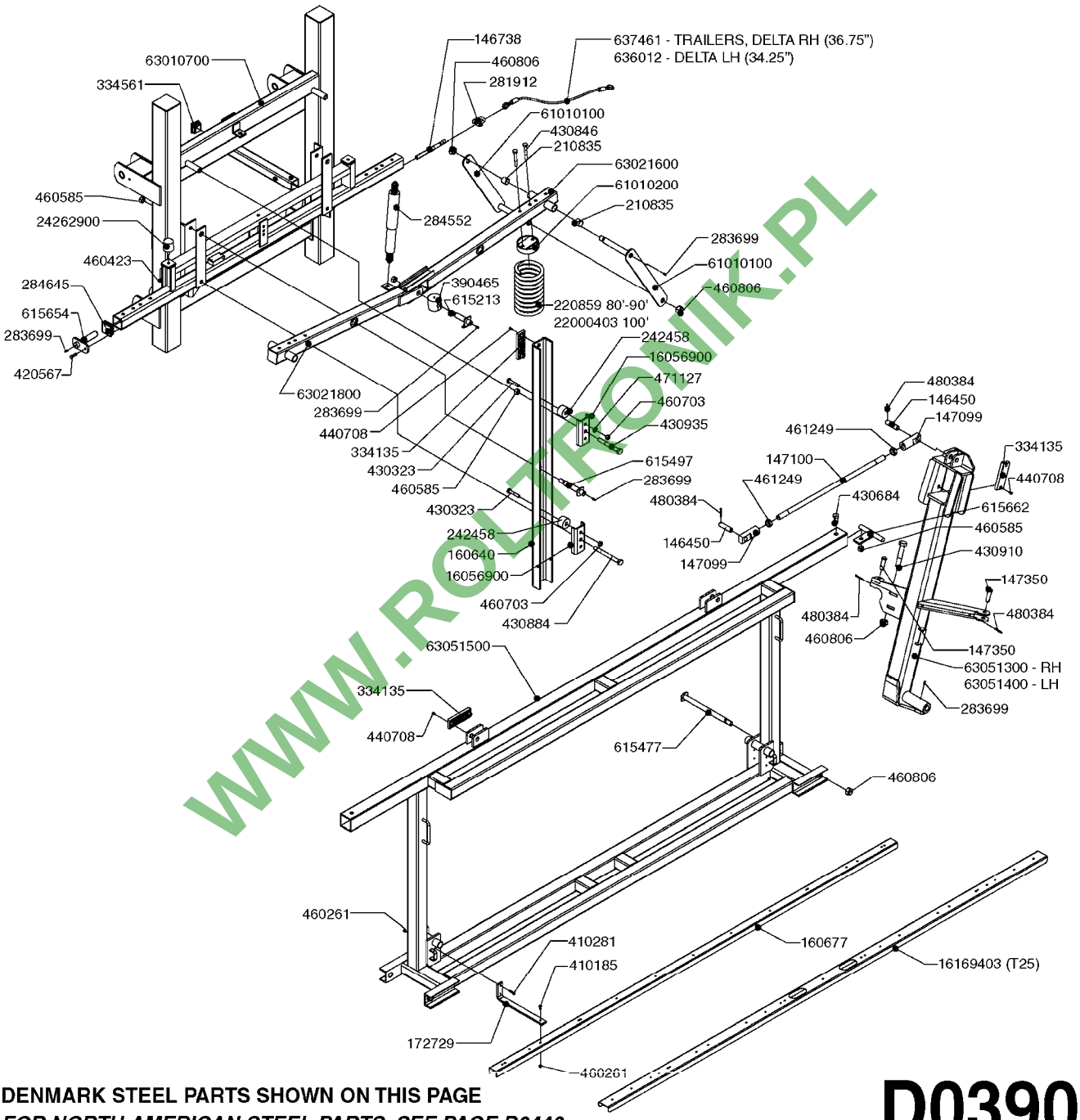

WWW.ROLTRONIK.PL

DENMARK STEEL PARTS SHOWN ON THIS PAGE

FOR NORTH AMERICAN STEEL PARTS, SEE PAGE D0440

D0390

parts-n°	order qty	description
146450	1	PIN D19.8 X 75 WITH 2 X D5
146738	1	PIN FOR CENTER CABLE EAGLE
147099	1	CLEVIS F.TILT ARM
147100	1	ROD F.TILT 80/90'
147350	1	PIN D16.8 L60MM
160640	1	U CHANNEL 80/90'
160677	1	NOZZLE TRACK 80/90'
172729	1	BRACKET F.NOZ.TRACK 80/90'
210835	1	BUSHING D28/25 L=25
220859	1	SPRING COIL 80/90' EAGLE
242458	1	BUSHING RUBBER DAMPER SPC EAG.
281912	1	GRILLETE M-10 INOX.480 KG
283699	1	GREASE NIPPLE M6X1
284552	1	SHOCK ABSORBER F.EAGLE BOOM
284645	1	PLUG 60x60x2
334135	1	SLIDE SHOE 140X45X15
334561	1	PLUG 50x50x2 F.SQ.TUBE
390465	1	JOINER BLOCK TRAPEEZE EAGLE
410185	1	BOLT HEX 8.8 DEL M6X16 A2
410281	1	BOLT HEX 8.8 DEL M6X25 DIN933 A2
420567	1	BOLT HEX 8.8 DEL M8X30 FT
430323	1	BOLT HEX 8.8 DEL M12X60
430684	1	BOLT HEX 8.8 DEL M16X30 FT
430846	1	BOLT HEX 8.8 DEL M12X80
430884	1	BOLT HEX 8.8 DEL M16X160
430910	1	BOLT HEX 8.8 DEL M20X110
430935	1	BOLT HEX 8.8 DEL M16X130
440708	1	SCREW M5.5X16 SELF TAPPING SS
460261	1	NUT HEX M6X1 LOCK A2 DIN985
460423	1	NUT HEX M10X1.5 LOCK
460585	1	NUT HEX M16X2 LOCK
460703	1	NUT HEX M12X1.75 LOCK DIN985
460806	1	NUT HEX M20X2.5 LOCK
461249	1	NUT HEX M22X1.5
471127	1	WASHER, M12, Ø24/13.0X 2.5, SS
480384	1	PIN COTTER 3/16 x 1-1/2"
615213	1	PIN D22 X 70 LUBED F.EAGLE
615477	1	PIN F.HINGE 80/90'
615497	1	PIN D22 X 159 LUBED F.EAGLE
615654	1	PIN D25 X 123 F. PARALIFT
615662	1	SAFETY BAR F. TILT 80-90'
636012	1	CABLE,CENTER 80/90 7mm X 870mm
637461	1	CABLE CENTER 80/90' 7mm x935mm
16056900	1	PLATE SPC EAGLE 80-100
16169403	1	CENTER TRACK, SPC, 75-90' T25
22000403	1	SPRING SPC 100' CENTER SECTION
24262900	1	RUBBER STOP D50X40 M10X33
61010100	1	TRAPEZE ARM SPC 80-100
61010200	1	SPRING CAP SPC 80-100
63010700	1	LIFT FRAME SPC EAG 80-100
63021600	1	SUSPENSION ARM SPC 80-100
63021800	1	SUSPENSION ARM SPC 80-100
63051300	1	HINGE 80'-100' RH / SPC 05
63051400	1	HINGE 80'-100' LH / SPC 05
63051500	1	CENTER FRAME SPC 05

WWW.PRO-TRONIK.PL

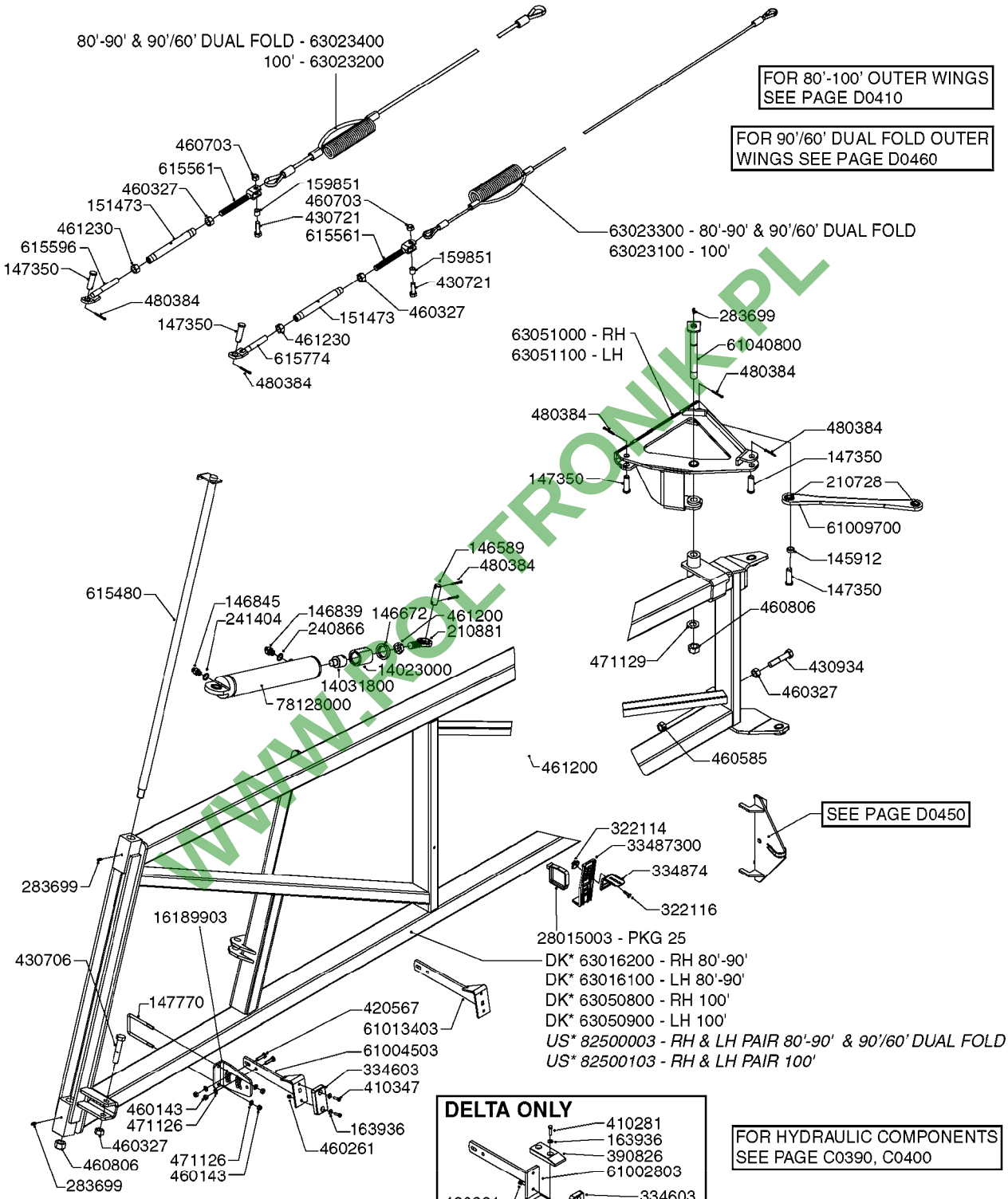

DK* = DENMARK STEEL PARTS

US* = NORTH AMERICAN STEEL PARTS

D0400

WWW.PCLTRONIK.PL

parts-nº	order qty	description
145912	1	BUSHING D19.8/D17.0X7MM
146589	1	PIN D19.8 X 65
146672	1	NUT HEX LOCK F.ADJUSTER
146839	1	HEX NIPPLE 1/4"X3/8" BSP 0.7MM
146845	1	HEX NIPPLE 1/4"X1/4"
147350	1	PIN D16.8 L60MM
147770	1	U-BOLT M8-105X63
151473	1	TURN BUCKLE HOUSING M16-200
159851	1	BUSHING Ø16.0/13.0 L=16 DEL
163936	1	WASHER D15/D6.2X1
210728	1	BEARING F.LINK HEAD M17
210881	1	LINK HEAD GAR 20 DO
240866	1	DOWTYSEAL 3/8"
241404	1	DOWTY SEAL 1/4"
283699	1	GREASE NIPPLE M6X1
322114	1	NUT PLASTIC F.NOZZ.H
322116	1	BOLT PLASTIC F.NOZZ.H.
334603	1	RUBBER STOP 86X48X15
334874	1	NOZZLE HOLDER - TOP HALF
390826	1	SLIDE PAD F.TRANSPORT BKT.CM/D
410281	1	BOLT HEX 8.8 DEL M6X25 DIN933 A2
410347	1	SCREW M6X20 8.8
420567	1	BOLT HEX 8.8 DEL M8X30 FT
430706	1	BOLT HEX 8.8 DEL M16X90
430721	1	BOLT HEX 8.8 DEL M12X40 FT
430934	1	BOLT HEX 8.8 DEL M16X80
460143	1	NUT HEX M8 LOCK A2 DIN985
460261	1	NUT HEX M6X1 LOCK A2 DIN985
460327	1	NUT HEX M16X2
460585	1	NUT HEX M16X2 LOCK
460703	1	NUT HEX M12X1.75 LOCK DIN985
460806	1	NUT HEX M20X2.5 LOCK
461200	1	NUT HEX M20X1.5 JAMB.
461230	1	NUT HEX M16X2 LH THREAD
471126	1	WASHER, M8, Ø16/ 8.4X 1.6, SS
471129	1	WASHER, M20, Ø37/21.0X 3.0, SS
480384	1	PIN COTTER 3/16 x 1-1/2"
615480	1	PIN F.HINGE ASSY.
615561	1	CLEVIS F.TURNBUCKLE M16 RH
615596	1	TURN BUCKLE ANCHOR M16 LH
615774	1	ANCHOR LH F.M16 TURNBUCKLE
14023000	1	BUSHING Ø50.0/36.0 L=52 DEL
14031800	1	ADAPTOR F.HY CYLINDER L=40
16189903	1	PLATE F, EAGLE STOPARM
28015003	1	PANDUIT TIE STRAP, PKG. 25
33487300	1	NOZZLE HOLDER - BOTTOM HALF
61002803	1	TRANSPORT STOP DELTA-SPC
61004503	1	BOOM STOP SPB/SPC
61009700	1	FOLDING ARM / SPC
61013403	1	BOOM STOP LONG SPC
61040800	1	PIN THREADED D20 L=205 DELTA
63016100	1	WING INNER 80'-90'LH SPC 2007
63016200	1	WING INNER 80'-90'RH SPC 2007
63023100	1	CABLE Ø7 X 5280 / SPC
63023200	1	CABLE Ø10 X 5180 / SPC
63023300	1	CABLE Ø7 X 4780 / SPC
63023400	1	CABLE Ø10 X 4650 / SPC
63050800	1	WING INNER RH 100' SPC 05
63050900	1	WING INNER LH 100' SPC 05
63051000	1	FOLD MECHANISM R.H. SPC 05
63051100	1	FOLD MECHANISM L.H. SPC 05

WWW.ROLTRONIK.PL

parts-n°	order qty	description
78128000	1	CYLINDER DOUB. D60/30 L=300 09
82500003	1	WING INNER SET FPS SPC 80-90'
82500103	1	WING INNER SET FPS SPC 100'

WWW.ROLTRONIK.PL

BOOM - SPC OUTER WING 80-100'
D0410-HIN, 01:01:16

Page 0

Date 16.03.2016 13:54

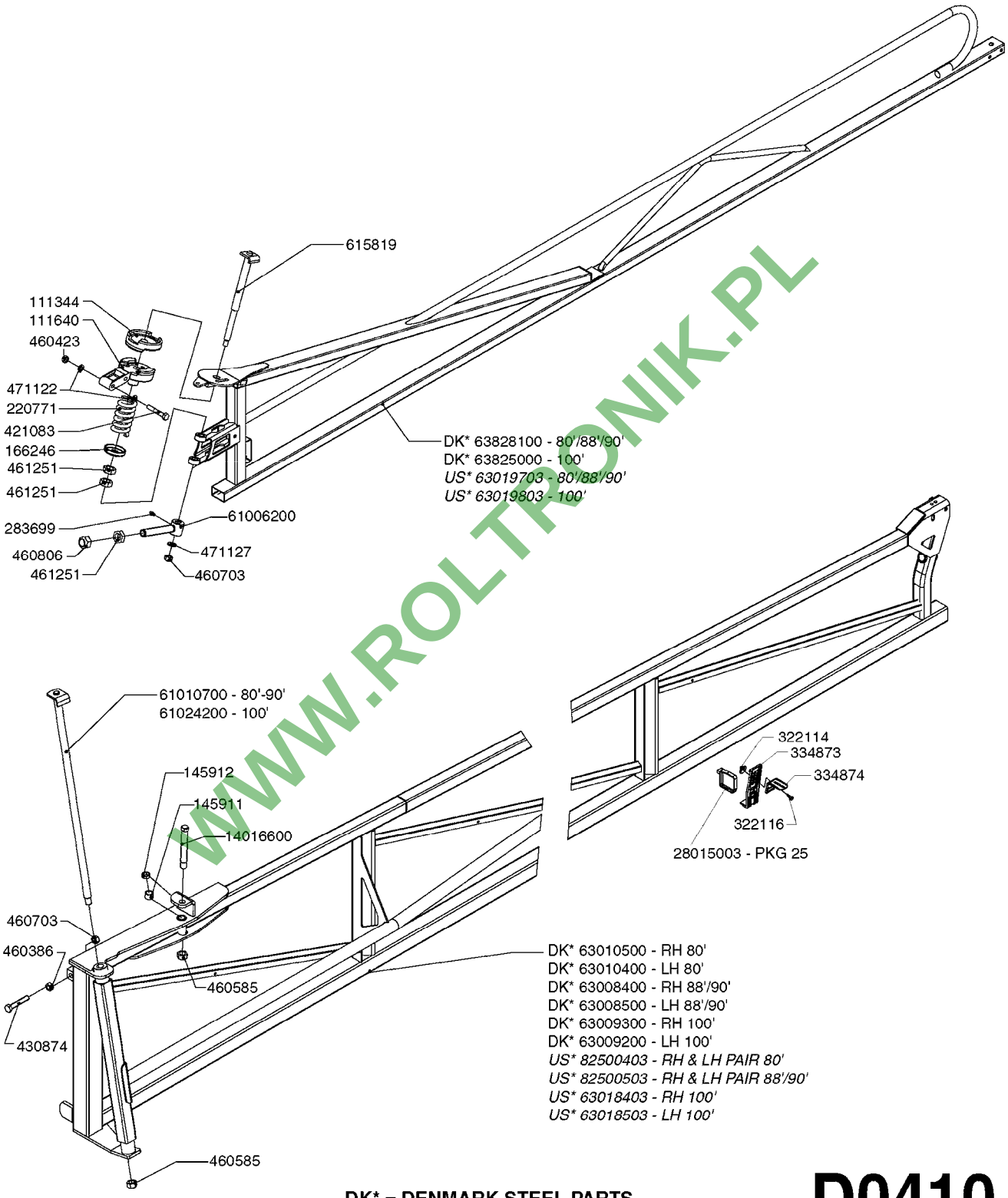

WWW.ROLTRONIK.PL

DK* = DENMARK STEEL PARTS
US* = NORTH AMERICAN STEEL PARTS

D0410

parts-n°	order qty	description
111344	1	CLAW CLUTCH LOWER (21MM)
111640	1	CLAW CLUTCH MOVING PART D100
145911	1	BUSHING FOR HY CYL 21M LZ
145912	1	BUSHING D19.8/D17.0X7MM
166246	1	WASHER CUP D53 F.SPRING
220771	1	SPRING D53/D43X100
283699	1	GREASE NIPPLE M6X1
322114	1	NUT PLASTIC F.NOZZ.H
322116	1	BOLT PLASTIC F.NOZZ.H.
334873	1	NOZZLE HOLDER - BOTTOM HALF
334874	1	NOZZLE HOLDER - TOP HALF
421083	1	BOLT HEX 8.8 DEL M10X65
430874	1	SCREW SET 8.8 DEL M12X70 FT
460386	1	NUT HEX M12X1.75
460423	1	NUT HEX M10X1.5 LOCK
460585	1	NUT HEX M16X2 LOCK
460703	1	NUT HEX M12X1.75 LOCK DIN985
460806	1	NUT HEX M20X2.5 LOCK
461251	1	NUT HEX M20 X 2.5 JAMB
471122	1	WASHER, M10, Ø20/10.5X 2.0, SS
471127	1	WASHER, M12, Ø24/13.0X 2.5, SS
615819	1	PIN
14016600	1	PIN F. LINK ARM / SPC
28015003	1	PANDUIT TIE STRAP, PKG. 25
61006200	1	ADJ. ARM F.BREAKAWAY FTZ
61010700	1	PIN F.HINGE 80-90'/SPC L=664
61024200	1	PIN F. PIVOT HINGE 100'/SPC
63008400	1	OUTERWING 90' RH / SPC
63008500	1	OUTERWING 90' LH / SPC
63009200	1	OUTERWING 100' LH / SPC
63009300	1	OUTERWING 100' RH / SPC
63010400	1	OUTERWING 80' LH / SPC
63010500	1	OUTERWING 80' RH / SPC
63018403	1	WING OUTER RH 100' SPC
63018503	1	WING OUTER LH 100' SPC
63019703	1	BREAKAWAY 2.5M SPC/FTZ
63019803	1	BREAKAWAY 3M SPC/FTZ
63828100	1	BREAKAWAY FTZ/SPC 2.5M, RED
63825000	1	BREAKAWAY FTZ/SPC 3.0M, RED
82500403	1	WING OUTER SET FPS 80' SPC
82500503	1	WING OUTER SET FPS 88-90' SPC

WWW.ROLTRONIK.PL

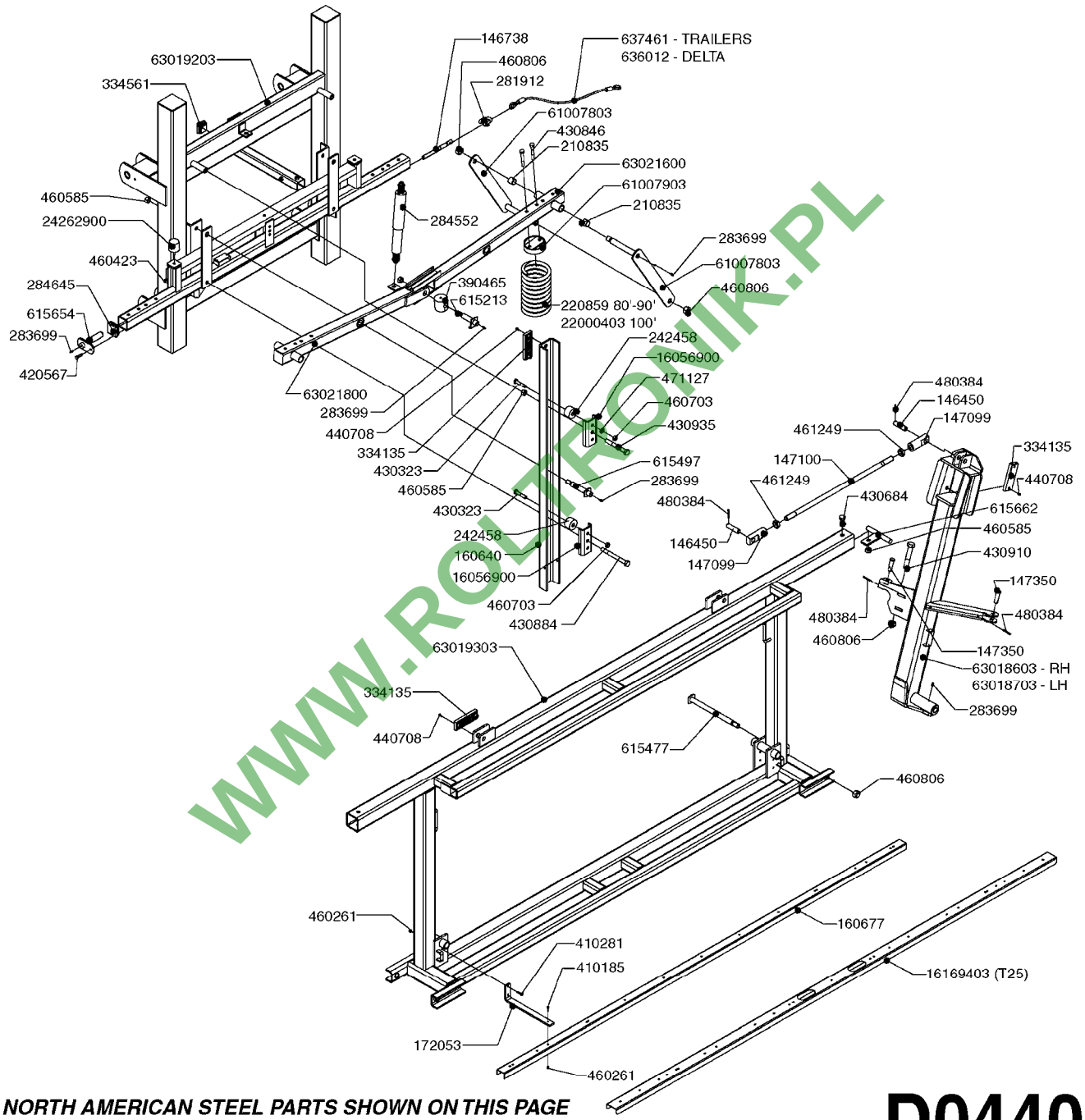

WWW.ROLTRONIK.PL

NORTH AMERICAN STEEL PARTS SHOWN ON THIS PAGE

FOR DENMARK STEEL PARTS, SEE PAGE D0390

D0440

parts-n°	order qty	description
146450	1	PIN D19.8 X 75 WITH 2 X D5
146738	1	PIN FOR CENTER CABLE EAGLE
147099	1	CLEVIS F.TILT ARM
147100	1	ROD F.TILT 80/90'
147350	1	PIN D16.8 L60MM
160640	1	U CHANNEL 80/90'
160677	1	NOZZLE TRACK 80/90'
172053	1	NOZZLE TRACK HOLDER
210835	1	BUSHING D28/25 L=25
220859	1	SPRING COIL 80/90' EAGLE
242458	1	BUSHING RUBBER DAMPER SPC EAG.
281912	1	GRILLETE M-10 INOX.480 KG
283699	1	GREASE NIPPLE M6X1
284552	1	SHOCK ABSORBER F.EAGLE BOOM
284645	1	PLUG 60x60x2
334135	1	SLIDE SHOE 140X45X15
334561	1	PLUG 50x50x2 F.SQ.TUBE
390465	1	JOINER BLOCK TRAPEEZE EAGLE
410185	1	BOLT HEX 8.8 DEL M6X16 A2
410281	1	BOLT HEX 8.8 DEL M6X25 DIN933 A2
420567	1	BOLT HEX 8.8 DEL M8X30 FT
430323	1	BOLT HEX 8.8 DEL M12X60
430684	1	BOLT HEX 8.8 DEL M16X30 FT
430846	1	BOLT HEX 8.8 DEL M12X80
430884	1	BOLT HEX 8.8 DEL M16X160
430910	1	BOLT HEX 8.8 DEL M20X110
430935	1	BOLT HEX 8.8 DEL M16X130
440708	1	SCREW M5.5X16 SELF TAPPING SS
460261	1	NUT HEX M6X1 LOCK A2 DIN985
460423	1	NUT HEX M10X1.5 LOCK
460585	1	NUT HEX M16X2 LOCK
460703	1	NUT HEX M12X1.75 LOCK DIN985
460806	1	NUT HEX M20X2.5 LOCK
461249	1	NUT HEX M22X1.5
471127	1	WASHER, M12, Ø24/13.0X 2.5, SS
480384	1	PIN COTTER 3/16 x 1-1/2"
615213	1	PIN D22 X 70 LUBED F.EAGLE
615477	1	PIN F.HINGE 80/90'
615497	1	PIN D22 X 159 LUBED F.EAGLE
615654	1	PIN D25 X 123 F. PARALIFT
615662	1	SAFETY BAR F. TILT 80-90'
636012	1	CABLE,CENTER 80/90 7mm X 870mm
637461	1	CABLE CENTER 80/90' 7mm x935mm
16056900	1	PLATE SPC EAGLE 80-100
16169403	1	CENTER TRACK, SPC, 75-90' T25
22000403	1	SPRING SPC 100' CENTER SECTION
24262900	1	RUBBER STOP D50X40 M10X33
61007803	1	TRAPEZE BAR SPC CENTER
61007903	1	SPRING BASE SPC CENTER
63018603	1	HINGE 80'-100' RH / SPC
63018703	1	HINGE 80'-100' LH / SPC
63019203	1	PARA-LIFT LIFT CENTER SPC
63019303	1	CENTER FRAME SPC
63021600	1	SUSPENSION ARM SPC 80-100
63021800	1	SUSPENSION ARM SPC 80-100

WWW.PRO-TRONIK.PL

HARDI	**Agroparts: www.HARDI-INTERNATIONAL.com**	
	BOOM CABLE KIT SPC 80'-90' D0450-HIN, 01:01:16	Page 0 Date 16.03.2016 13:54

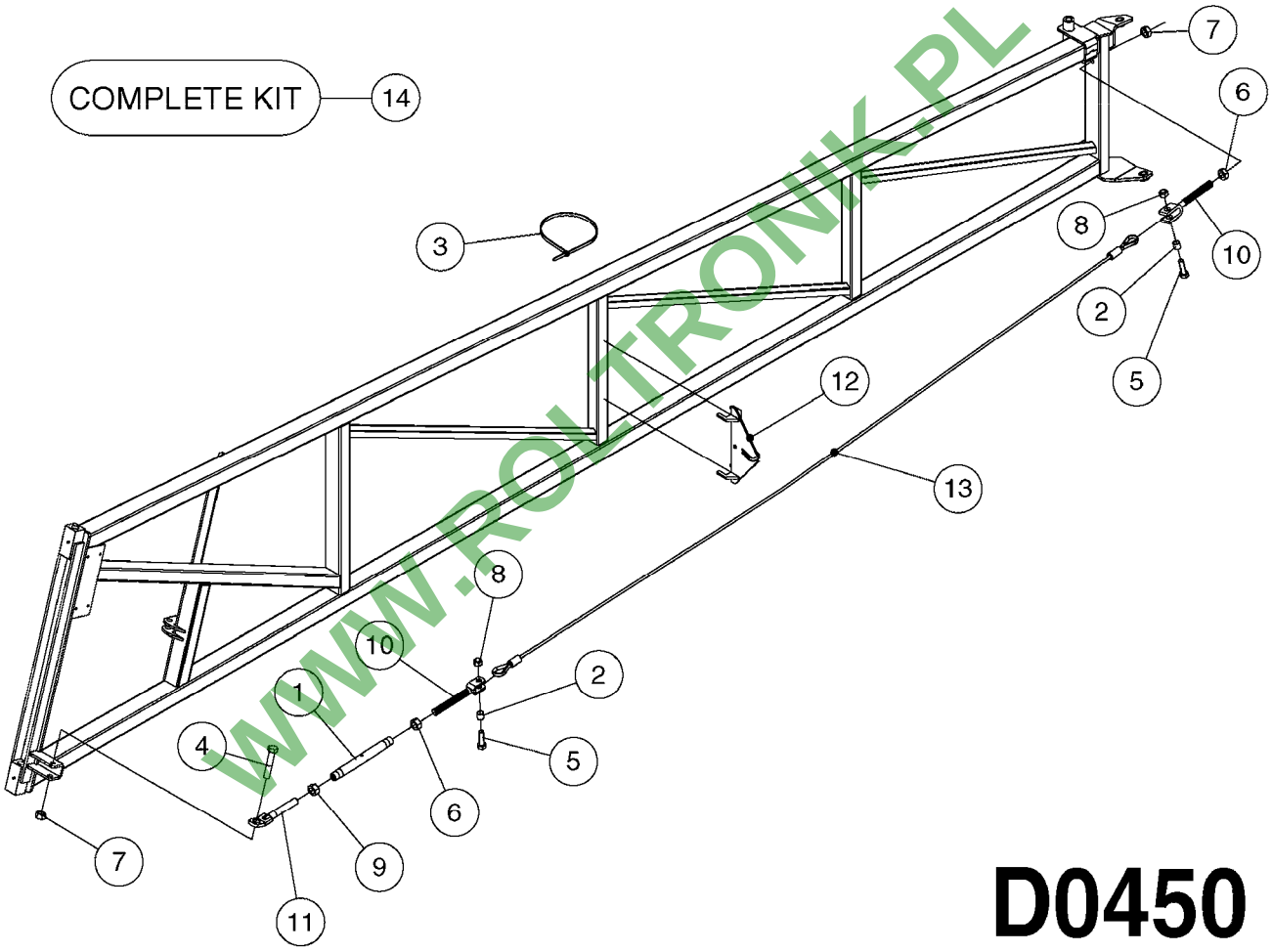

WWW.ROLTRONIK.PL

D0450

BOOM CABLE KIT SPC 80'-90'
D0450-HIN, 01:01:16

Pos.	parts-n°	order qty	description
1	151473	1	TURN BUCKLE HOUSING M16-200
2	159851	1	BUSHING Ø16.0/13.0 L=16 DEL
3	28025203	1	TIE STRAP L=23" x W=1/2"
4	430706	1	BOLT HEX 8.8 DEL M16X90
5	430721	1	BOLT HEX 8.8 DEL M12X40 FT
6	460327	1	NUT HEX M16X2
7	460585	1	NUT HEX M16X2 LOCK
8	460703	1	NUT HEX M12X1.75 LOCK DIN985
9	461230	1	NUT HEX M16X2 LH THREAD
10	615561	1	CLEVIS F.TURNBUCKLE M16 RH
11	615774	1	ANCHOR LH F.M16 TURNBUCKLE
12	63028603	1	BRACE, CABLE INNER SPC
13	63028703	1	CABLE Ø10 X 4750 / SPC
14	83347603	1	SPC 80-90 CABLE KIT, IN-FIELD

WWW.ROLTRONIK.PL

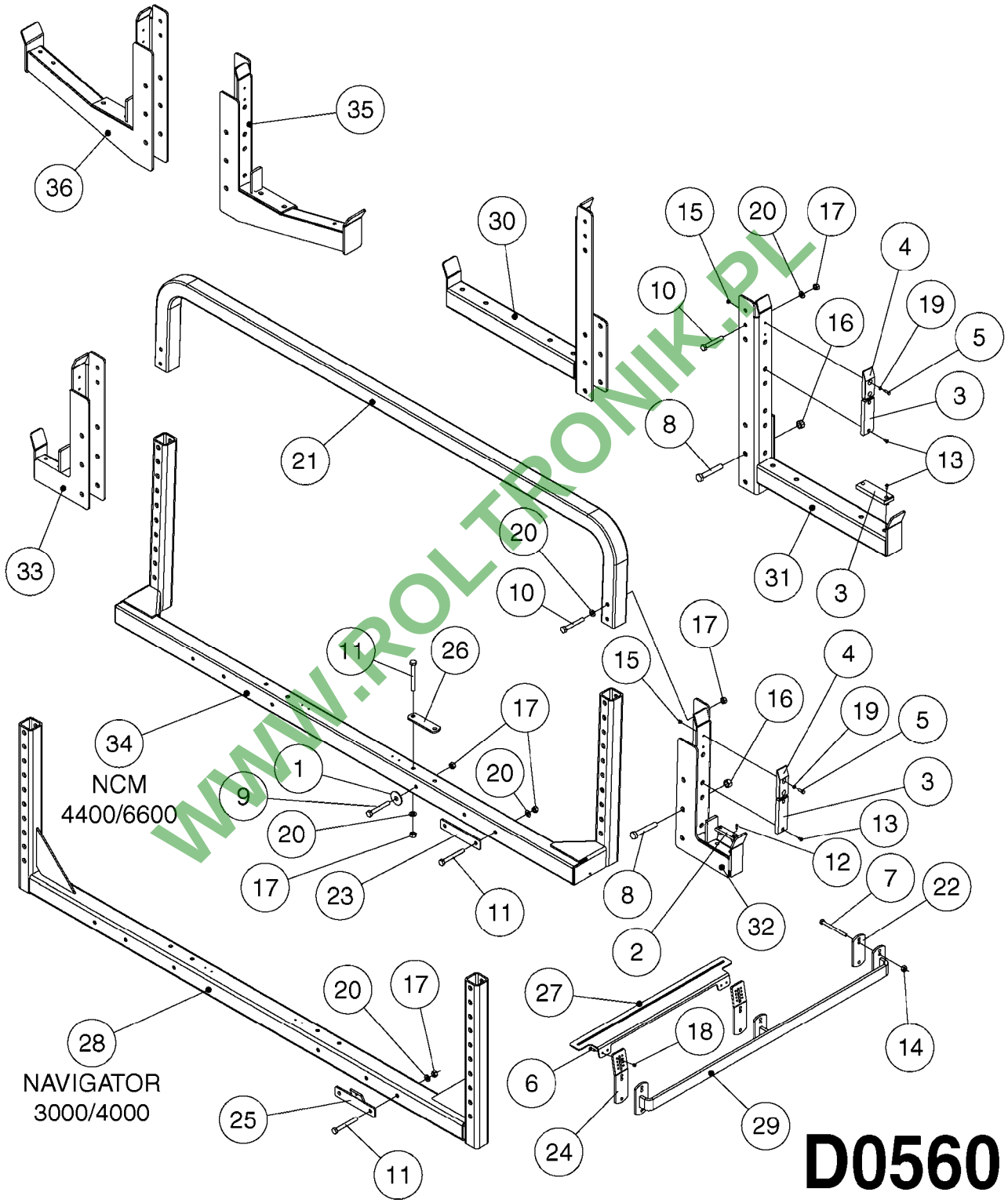

WWW.ROLTRONIK.PL

Pos.	parts-n°	order qty	description
1	163074	1	WASHER D54/D17X3
2	333956	1	SLIDE SHOE 91X25X10
23	16118303	1	PLATE F. CM9000 TRANSPORT NCM 9000
3	334135	1	SLIDE SHOE 140X45X15
4	390826	1	SLIDE PAD F.TRANSPORT BKT.CM/D
5	410362	1	BOLT HEX 8.8 SS M6X20 FT
6	410406	1	BOLT HEX 8.8 DEL M5X16 FT
7	421232	1	BOLT HEX 8.8 DEL M8X110
8	430264	1	BOLT HEX 8.8 DEL M16X100
9	430367	1	BOLT HEX 8.8 DEL M12X100 DIN931
10	430485	1	BOLT HEX 8.8 DEL M12X90
11	430892	1	BOLT HEX 8.8 DEL M12X110
12	440665	1	SCREW M4.2X16 STAINLESS
13	440708	1	SCREW M5.5X16 SELF TAPPING SS
14	460143	1	NUT HEX M8 LOCK A2 DIN985
15	460261	1	NUT HEX M6X1 LOCK A2 DIN985
16	460585	1	NUT HEX M16X2 LOCK
17	460703	1	NUT HEX M12X1.75 LOCK DIN985
18	461217	1	NUT HEX M5 LOCK
19	471125	1	WASHER, M6, Ø12/ 6.4X 1.6, SS
20	471127	1	WASHER, M12, Ø24/13.0X 2.5, SS
21	15028703	1	TRANSPORT CROSS TUBE CM4400
22	16092803	1	PLATE F. TRANSPORT CM+
23	16101703	1	PLATE 1/4"x1-1/2" L=270/2xØ13 NCM 4400/6600
24	16109303	1	PLATE F. TRANSPORT REST CM
25	16116703	1	PLATE, S/G TUBE MT NAVIGATOR
26	16138700	1	PLATE F. TRANSPORT CROSS BAR
27	16183403	1	BRACKET, TRANSPORT BAR NOZ, RED T25 NOZZLE BRACKET
28	61010903	1	TRANSPORT CROSS BAR NAVIGATOR
29	61012603	1	TRANSPORT REST SPC NCM 4400
30	63024603	1	TRANSPORT REST FTZ R.H. CM4400
31	63024703	1	TRANSPORT REST FTZ L.H. CM4400
32	63024803	1	TRANSPORT REST SPC NCM/NAV
33	63024903	1	TRANSPORT REST SPC NCM/NAV
34	63027503	1	TRANSPORT CROSS BAR NCM44/6600
35	63038003	1	TRANSPORT BRACKET, 120 SPC LH
36	63038103	1	TRANSPORT BRACKET, 120 SPC RH

WWW.ROLTRONIK.PL

SYNTAL

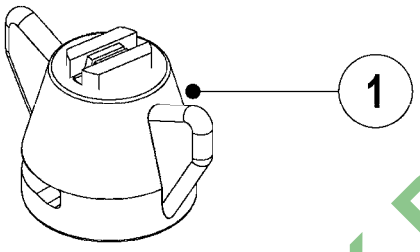

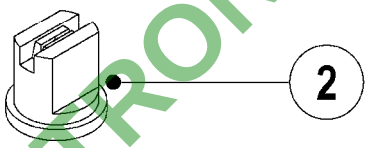

CERAMIC

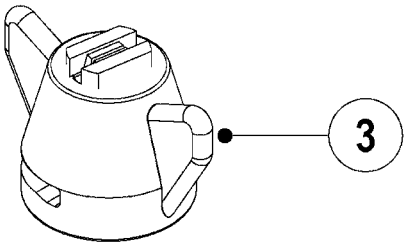

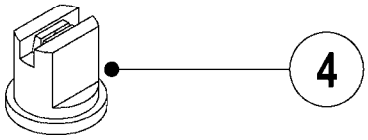

D1000

WWW.ROLTRONIK.PL

Pos.	parts-n°	order qty	description
1	371764	1	NOZZLE ISO CT F-01-110 ORANGE
1	371765	1	NOZZLE ISO CT F-015-110 GREEN
1	371766	1	NOZZLE ISO CT F-02-110 YELLOW
1	371767	1	NOZZLE ISO CT F-03-110 BLUE
1	371768	1	NOZZLE ISO CT F-04-110 RED
1	371769	1	NOZZLE ISO CT F-05-110 BROWN
1	371770	1	NOZZLE ISO CT F-06-110 GREY
1	371771	1	NOZZLE ISO CT F-08-110 WHITE
1	371950	1	NOZZLE ISO CT F-025-110 LILAC
1	371964	1	NOZZLE ISO CT F-075-110 PINK
1	371970	1	NOZZLE ISO CT F-10-110 LT BLUE
2	371706	1	NOZZLE ISO F-01-110 ORANGE
2	371707	1	NOZZLE ISO F-015-110 GREEN
2	371708	1	NOZZLE ISO F-02-110 YELLOW
2	371709	1	NOZZLE ISO F-03-110 BLUE
2	371710	1	NOZZLE ISO F-04-110 RED
2	371711	1	NOZZLE ISO F-05-110 BROWN
2	371712	1	NOZZLE ISO F-06-110 GREY
2	371713	1	NOZZLE ISO F-08-110 WHITE
2	371946	1	NOZZLE ISO F-025-110 LILAC
2	371963	1	NOZZLE ISO F-075-110 PINK
2	371966	1	NOZZLE ISO F-10-110 LT BLUE
3	371772	1	NOZZLE ISO CT F-015-110C GREEN
3	371773	1	NOZZLE ISO CT F-02-110C YELLOW
3	371774	1	NOZZLE ISO CT F-03-110C BLUE
3	371775	1	NOZZLE ISO CT F-04-110C RED
3	371776	1	NOZZLE ISO CT F-05-110C BROWN
3	371777	1	NOZZLE ISO CT F-06-110C GREY
4	371738	1	NOZZLE ISO F-015-110C GREEN
4	371739	1	NOZZLE ISO F-02-110C YELLOW
4	371740	1	NOZZLE ISO F-03-110C BLUE
4	371741	1	NOZZLE ISO F-04-110C RED
4	371742	1	NOZZLE ISO F-05-110C BROWN
4	371743	1	NOZZLE ISO F-06-110C GREY

WWW.BOTRONIK.PL

SYNTAL

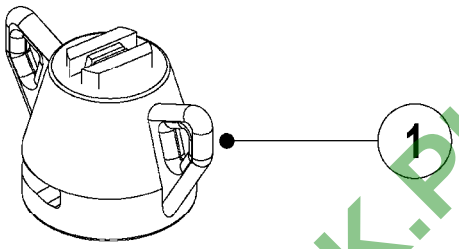

CERAMIC

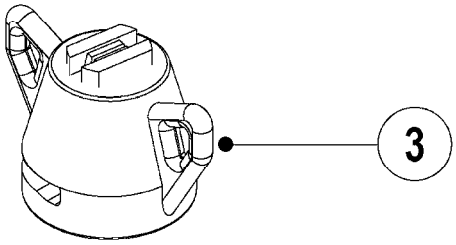

D1010

WWW.ROLTRONIK.PL

BOOM-NOZZLES 110° LOWDRIFT ISO
D1010-HIN, 01:01:16

Date 16.03.2016 13:54

Pos.	parts-n°	order qty	description
1	371837	1	NOZZLE ISO CT LD-01-110 ORANGE
1	371838	1	NOZZLE ISO CT LD-015-110 GREEN
1	371839	1	NOZZLE ISO CT LD-02-110 YELLOW
1	371840	1	NOZZLE ISO CT LD-03-110 BLUE
1	371841	1	NOZZLE ISO CT LD-04-110 RED
1	371894	1	NOZZLE ISO CT LD-05-110 BROWN
1	371958	1	NOZZLE ISO CT LD-025-110 LILAC
2	371817	1	NOZZLE ISO LD-01-110 ORANGE
2	371818	1	NOZZLE ISO LD-015-110 GREEN
2	371819	1	NOZZLE ISO LD-02-110 YELLOW
2	371820	1	NOZZLE ISO LD-03-110 BLUE
2	371821	1	NOZZLE ISO LD-04-110 RED
2	371893	1	NOZZLE ISO LD-05-110 BROWN
2	371957	1	NOZZLE ISO LD-025-110 LILAC
3	371842	1	NOZZLE ISO CT LD-01-110C ORANG
3	371843	1	NOZZLE ISO CT LD-015-110C GRN
3	371844	1	NOZZLE ISO CT LD-02-110C YELLO
3	371845	1	NOZZLE ISO CT LD-03-110C BLUE
3	371846	1	NOZZLE ISO CT LD-04-110C RED
3	371897	1	NOZZLE ISO CT LD-05-110C BROWN
4	371822	1	NOZZLE ISO LD-01-110C ORANGE
4	371823	1	NOZZLE ISO LD-015-110C GREEN
4	371824	1	NOZZLE ISO LD-02-110C YELLOW
4	371825	1	NOZZLE ISO LD-03-110C BLUE
4	371826	1	NOZZLE ISO LD-04-110C RED
4	371896	1	NOZZLE ISO LD-05-110C BROWN

WWW.ROLTRONIK.PL

SYNTAL

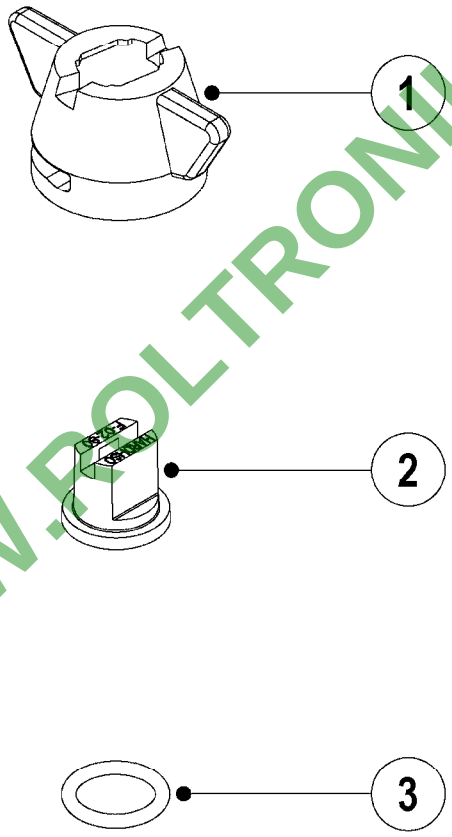

WWW.POLTRONIK.PL

D1020

BOOM-NOZZLES 80° FLAT FAN ISO
D1020-HIN, 01:01:16

Date 16.03.2016 13:54

Pos.	parts-n°	order qty	description
1	334083	1	SNAP-FIT NOZZLE HOLDER SS BLCK
2	371931	1	SYNTAL ISO F-01-80 TIP ORNG
2	371932	1	SYNTAL ISO F-015-80 TIP GREEN
2	371933	1	SYNTAL ISO F-02-80 TIP YELLOW
2	371934	1	SYNTAL ISO F-03-80 TIP BLUE
3	10423503	1	O-RING 9.12x3.53 NITRIL

WWW.ROLTRONIK.PL

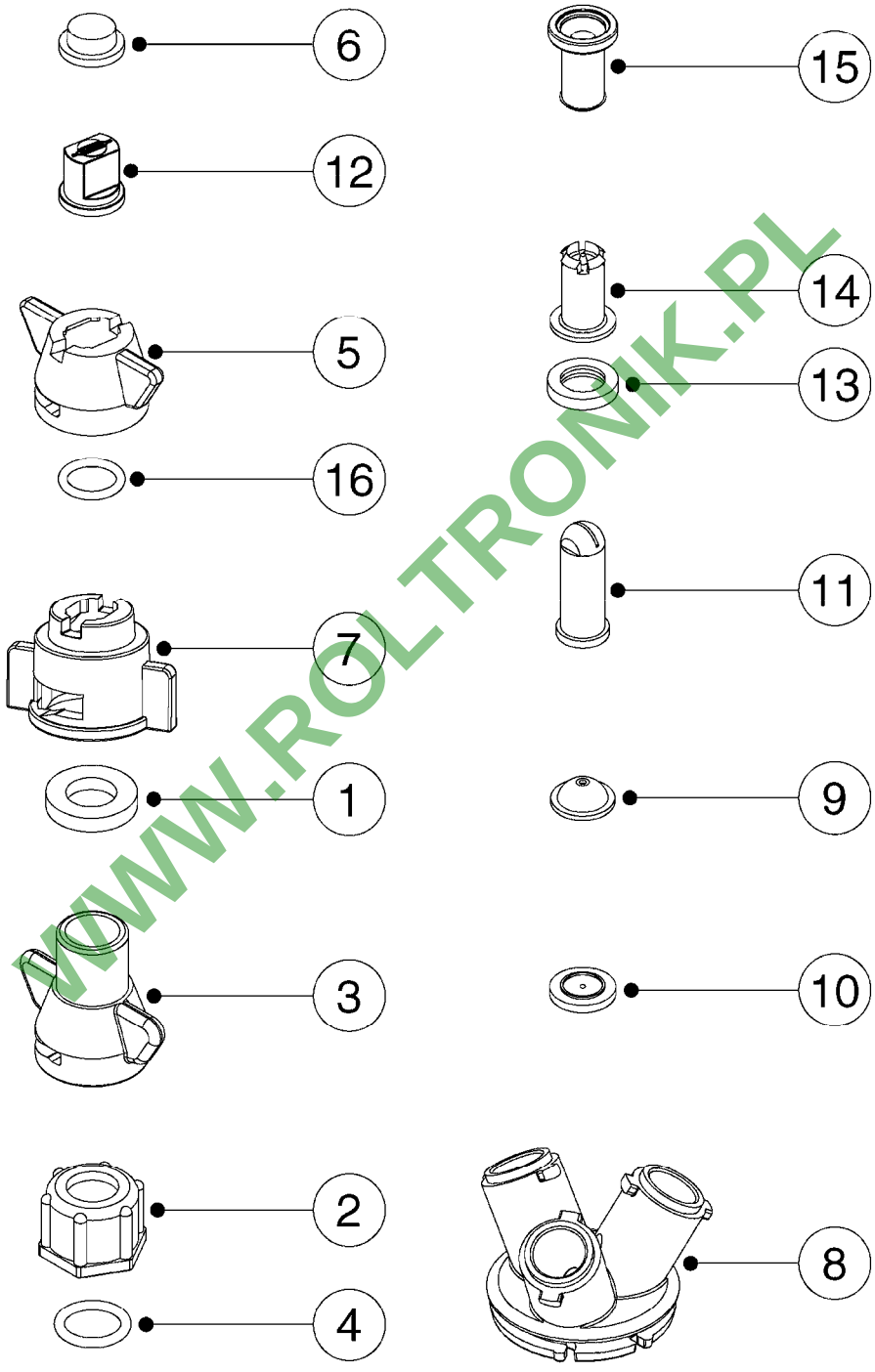

WWW.ROLTRONIK.PL

D1030

BOOM-NOZZLE CAPS AND FILTERS
D1030-HIN, 01:01:16

Pos.	parts-n°	order qty	description
1	242222	1	GASKET 19.0 X 10.0 X 3.3 EPDM
2	320187	1	FITT.DK CAP 3/8" BSP BLACK
2	321517	1	FITT.DK CAP 3/8" BSP WHITE
			ALWAYS USE WITH ISO AND INJET NOZZLES
2	321797	1	FITT.DK CAP 3/8' BSP BLUE
2	321801	1	FITT.DK CAP 3/8' BSP GREEN
2	321812	1	FITT.DK CAP 3/8' BSP RED
2	321823	1	FITT.DK CAP 3/8' BSP ORANGE
2	321834	1	FITT.DK CAP 3/8' BSP YELLOW
3	322068	1	SNAP-FIT ADAPTER THREAD. HARDI
4	330013	1	O-RING D15/D10X2.5 F.3/8"NUT
5	334083	1	SNAP-FIT NOZZLE HOLDER SS BLCK
6	334102	1	BLANK F.NOZZLE
7	334862	1	NOZZLE CAP TJBLACK F.ISO/INJET
8	334926	1	SNAP-FIT TURN PLATE F TRIPLET
9	370016	1	NOZZLE CONE JET 1553-08
9	370027	1	NOZZLE CONE JET 1553-10
9	370031	1	NOZZLE CONE JET 1553-12
9	370042	1	NOZZLE CONE JET 1553-14
9	370053	1	NOZZLE CONE JET 1553-16
9	370064	1	NOZZLE CONE JET 1553-18
9	370075	1	NOZZLE CONE JET 1553-20
9	370086	1	NOZZLE CONE JET 1553-22
9	370097	1	NOZZLE CONE JET 1553-24
9	370101	1	NOZZLE CONE JET 1553-30
9	370112	1	NOZZLE CONE JET 1553-35
9	370123	1	NOZZLE CONE JET 1553-40
10	370134	1	NOZZLE SWIRL 1554-GREY
10	370145	1	NOZZLE SWIRL 1554-BLACK
10	370156	1	NOZZLE SWIRL 1554-BLUE
10	370167	1	NOZZLE SWIRL 1554-1.3 WHITE
11	371551	1	NOZZ LRG DROP FLAT SPRAY SINGL
12	372140	1	HARDI ISO BLIND CAP
13	390639	1	O-RING F.NOZZLE FILTER
14	614366	1	FILTER 50 MESH F.NOZZLE BLUE
14	614367	1	FILTER 80 MESH F.NOZZLE RED
14	614368	1	FILTER 100 MESH F.NOZZLE YEL.
15	725042	1	SCREEN 80 MESH W.GASKET, RED
15	725043	1	SCREEN 50 MESH W.GASKET,BLUE
15	725044	1	SCREEN 100 MESH W.GASKET,YELLO
16	10423503	1	O-RING 9.12x3.53 NITRIL

WWW.PDTRONIK.PL

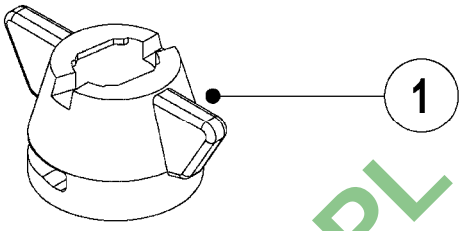

INJET Nozzle SYNTAL

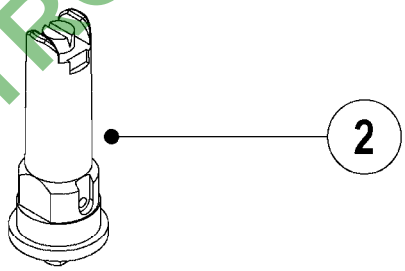

B-JET Nozzle SYNTAL

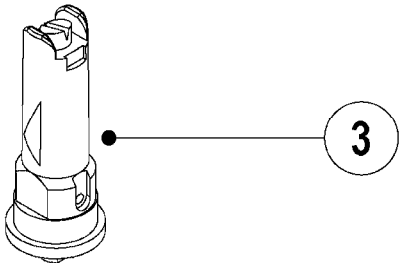

D1040

WWW.ROLTRONIK.PL

BOOM-NOZZLES INJET
D1040-HIN, 01:01:16

Pos.	parts-n°	order qty	description
1	334083	1	SNAP-FIT NOZZLE HOLDER SS BLCK
2	371872	1	NOZZLE INJET 015 GREEN SINGLE
2	371873	1	NOZZLE INJET 02 YELLOW SINGLE
2	371874	1	NOZZLE INJET 025 LILAC SINGLE
2	371875	1	NOZZLE INJET 03 BLUE SINGLE
2	371876	1	NOZZLE INJET 04 RED SINGLE
2	371926	1	NOZZLE INJET 01 ORANGE SINGLE
2	371927	1	NOZZLE INJET 05 BROWN SINGLE
2	371928	1	NOZZLE INJET 06 GREY SINGLE
2	371929	1	NOZZLE INJET 08 WHITE SINGLE
3	371870	1	NOZZLE B-JET 03 BLUE
3	371871	1	NOZZLE B-JET 04 RED
3	371877	1	NOZZLE B-JET 025 LILAC
3	371930	1	NOZZLE B-JET 02 YELLOW

WWW.ROLTRONIK.PL

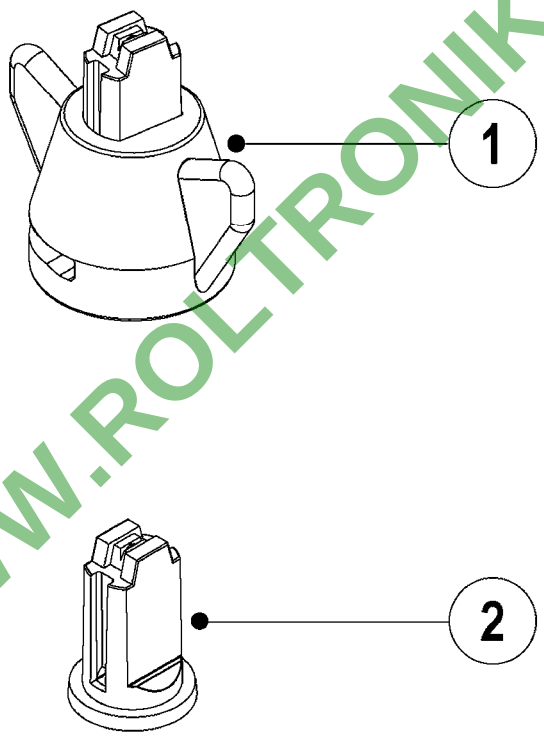

WWW.ROLTRONIK.PL

D1050

BOOM-NOZZLES MINIDRIFT
D1050-HIN, 01:01:16

Date 16.03.2016 13:54

Pos.	parts-n°	order qty	description
1	372121	1	NOZZLE ISO CT MD-015-110 GREEN
1	372122	1	NOZZLE ISO CT MD-02-110 YELLOW
1	372123	1	NOZZLE ISO CT MD-025-110 LILAC
1	372124	1	NOZZLE ISO CT MD-03-110 BLUE
1	372125	1	NOZZLE ISO CT MD-04-110 RED
1	372126	1	NOZZLE ISO CT MD-05-110 BROWN
2	372111	1	NOZZLE ISO MD-015-110 GREEN
2	372112	1	NOZZLE ISO MD-02-110 YELLOW
2	372113	1	NOZZLE ISO MD-025-110 LILAC
2	372114	1	NOZZLE ISO MD-03-110 BLUE
2	372115	1	NOZZLE ISO MD-04-110 RED
2	372116	1	NOZZLE ISO MD-05-110 BROWN

WWW.ROLTRONIK.PL

BOOM-NOZZLES QUINTASTREAM
D1060-HIN, 01:01:16

Date 16.03.2016 13:54

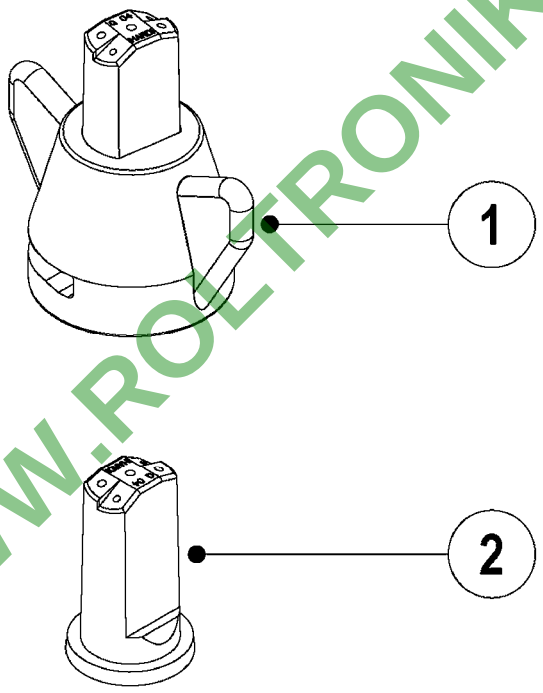

WWW.ROLTRONIK.PL

D1060

BOOM-NOZZLES QUINTASTREAM
D1060-HIN, 01:01:16

Date 16.03.2016 13:54

Pos.	parts-n°	order qty	description
1	372011	1	NOZZLE ISO QS-015-5H GREEN
1	372012	1	NOZZLE ISO QS-02-5H YELLOW
1	372013	1	NOZZLE ISO QS-03-5H BLUE
1	372014	1	NOZZLE ISO QS-04-5H RED
1	372015	1	NOZZLE ISO QS-05-5H BROWN
1	372016	1	NOZZLE ISO QS-06-5H GREY
1	372017	1	NOZZLE ISO QS-08-5H WHITE
1	372018	1	NOZZLE ISO QS-10-5H LT. BLUE
1	372019	1	NOZZLE ISO QS-15-5H LT. GREEN
2	372002	1	ISO QNTSTRM 015 S-GREEN
2	372003	1	ISO QNTSTRM 02 S-YELLOW
2	372004	1	ISO QNTSTRM 03 S-BLUE
2	372005	1	ISO QNTSTRM 04 S-RED
2	372006	1	ISO QNTSTRM 05 S-BROWN
2	372007	1	ISO QNTSTRM 06 S-GREY
2	372008	1	ISO QNTSTRM 08 S-WHITE
2	372009	1	ISO QNTSTRM 10 S-LT.BLU
2	372010	1	ISO QNTSTRM 15 S-LT.GRN

WWW.ROLTRONIK.PL

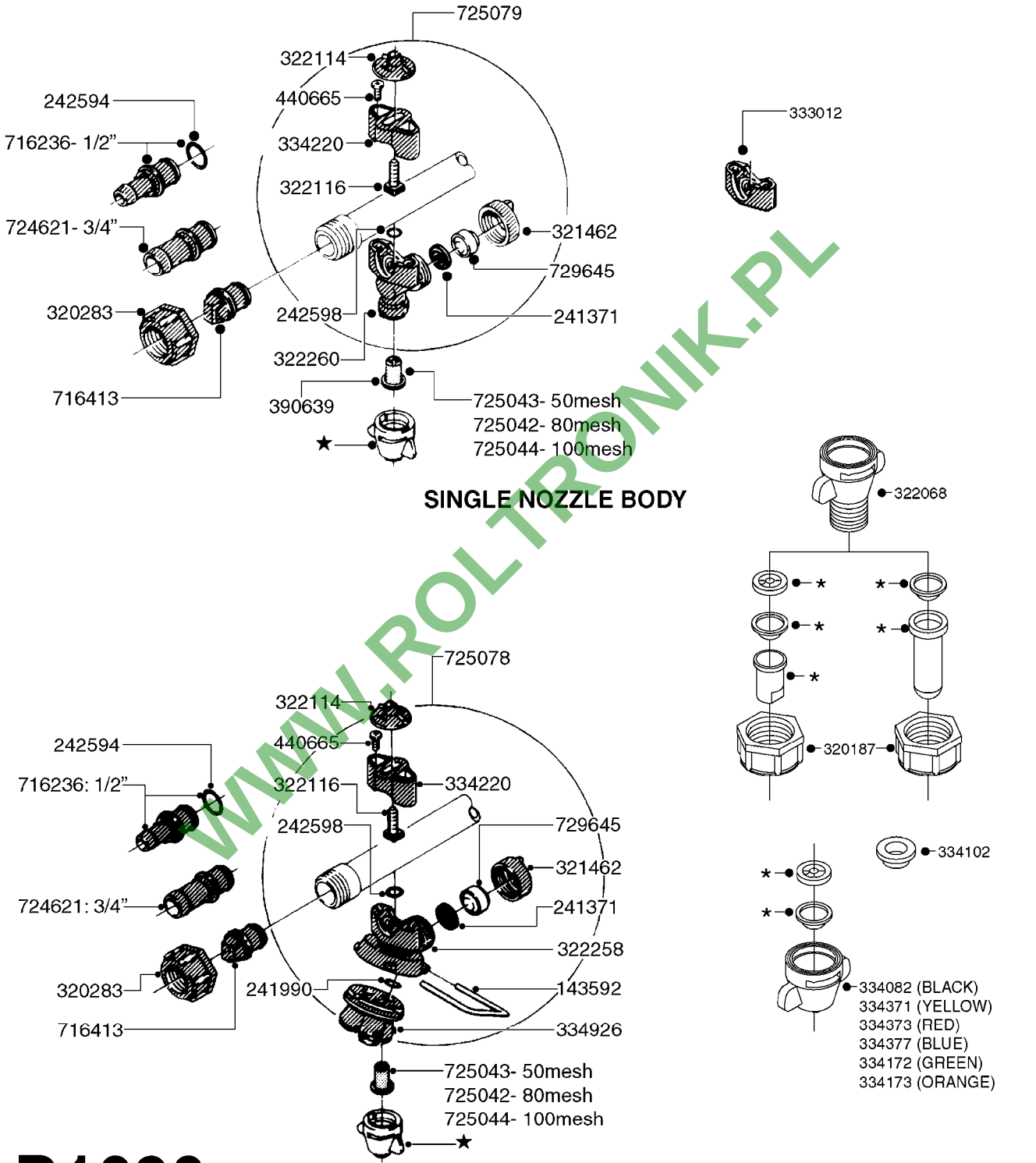

SINGLE NOZZLE BODY

TRIPLET NOZZLE BODY

D1090

*=REFER TO HARDI NOZZLE CATALOG

WWW.ROLTRONIK.PL

NOZZLE BODIES-SNAP FIT
D1090-HIN, 01:01:16

parts-n°	order qty	description
143592	1	LOCK CLAMP FOR TRIPLET
241371	1	DIAPHRAGM, NO-DRIP alt 241371
241990	1	O-RING D9.3 X 2.4 VITON
242594	1	O-RING D14 X 1.78 SCH.70-EPDM
242598	1	O-RING D7.0 X 2.5 NITRIL
320187	1	FITT.DK CAP 3/8" BSP BLACK
320283	1	FITT.DK NUT 3/4"BSP
321462	1	CAP F.NO-DRIP ASSY.
322068	1	SNAP-FIT ADAPTER THREAD. HARDI
322114	1	NUT PLASTIC F.NOZZ.H
322116	1	BOLT PLASTIC F.NOZZ.H.
322258	1	HOUSING F.TRIPLET
322260	1	NOZZLE HOLDER LOWER PART
333012	1	NOZZLE HOLD. UPPER PART
334082	1	SNAP-FIT NOZZ.HOLD.CONE BLACK
334102	1	BLANK F.NOZZLE
334172	1	SNAP-FIT NOZZ.HOLD.CONE GREEN
334173	1	SNAP-FIT NOZZ.HOLD.CONE ORANGE
334220	1	YOKE, UPPER NOZZLE BODY
334371	1	SNAP-FIT NOZZLE HOLDER YELLOW
334373	1	SNAP-FIT NOZZLE HOLDER RED
334377	1	SNAP-FIT NOZZLE HOLDER BLUE
334926	1	SNAP-FIT TURN PLATE F TRIPLET
390639	1	O-RING F.NOZZLE FILTER
440665	1	SCREW M4.2X16 STAINLESS
716236	1	FITT.DK HB 1/2" ASSY. F. 3/4"
716413	1	FITT.DK PLUG ASSY. F.NOZ TUBE
724621	1	FITT.DK HB 3/4"ASSY F.3/4" NUT
725042	1	SCREEN 80 MESH W.GASKET, RED
725043	1	SCREEN 50 MESH W.GASKET,BLUE
725044	1	SCREEN 100 MESH W.GASKET,YELLO
725078	1	SNAP-FIT TRIPLET W/O NOZZ HOLD
725079	1	NOZZLE ASSY.SING.SNAP-FIT GREN
729645	1	NON-DRIP SPRING ASSY.GREEN 10

WWW.RO-TRONIK.PL

HARDI	**Agroparts: www.HARDI-INTERNATIONAL.com**	
	DOUBLE NOZZLE HOLDER-SNAP FIT D1100-HIN, 01:01:16	Page 0 Date 16.03.2016 13:54

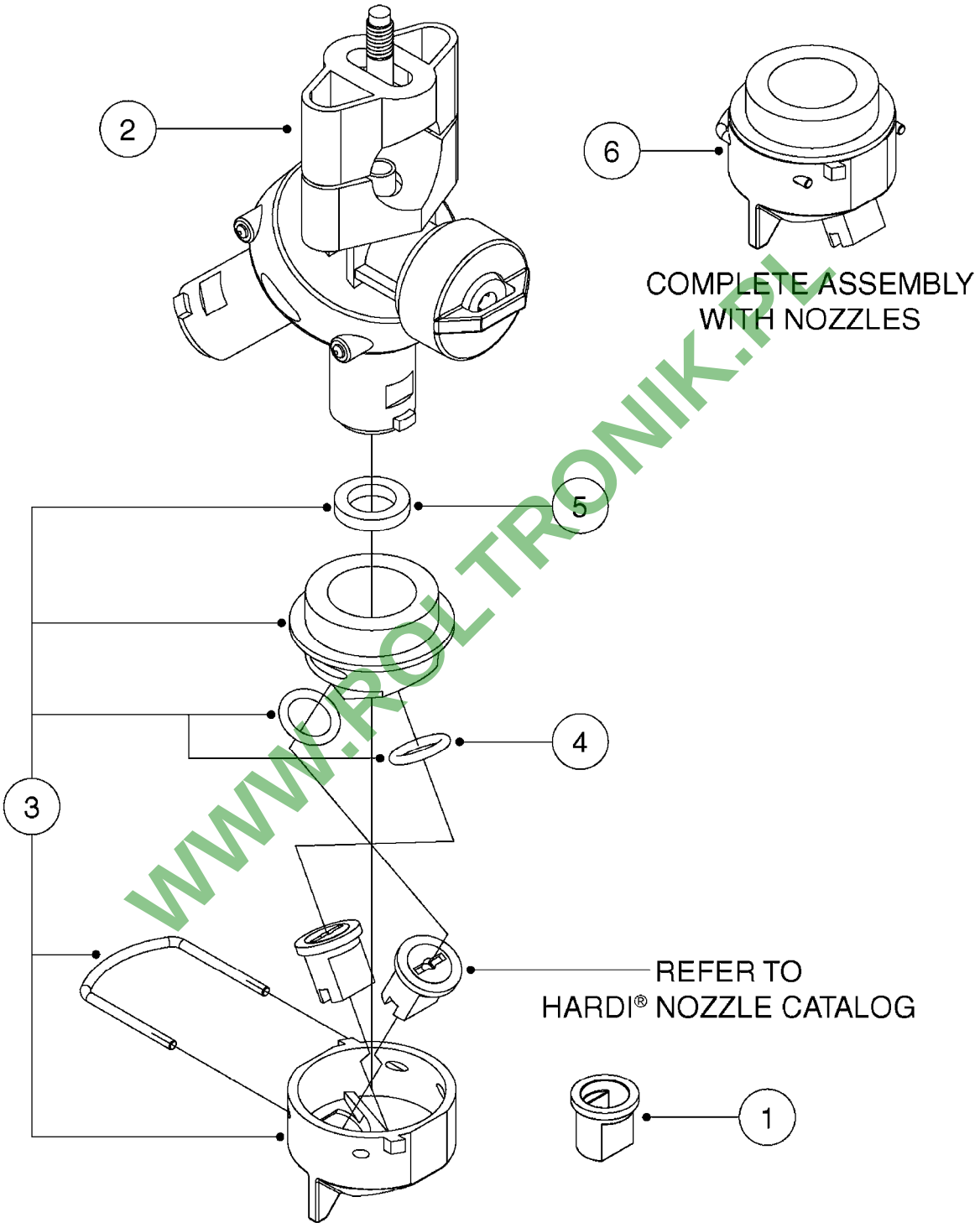

WWW.ROLTRONIK.PL

D1100

DOUBLE NOZZLE HOLDER-SNAP FIT
D1100-HIN, 01:01:16

Date 16.03.2016 13:54

Pos.	parts-n°	order qty	description
1	372140	1	HARDI ISO BLIND CAP
2	725078	1	SNAP-FIT TRIPLET W/O NOZZ HOLD
3	28032503	1	DOUBLE NOZZLE HOLDER LD ISO
4	28040103	1	O-RING F.DOUBLE NOZZLE HOLDER
5	28089103	1	GASKET F.DOUBLE NOZZLE HOLDER
6	70056803	1	DOUBLE NOZZLE CAP ORANGE LD 01
6	70056903	1	DOUBLE NOZZLE CAP GREEN LD 015
6	70057003	1	DOUBLE NOZZLE CAP YELLOW LD 02
6	70057103	1	DOUBLE NOZZLE CAP LILAC LD 025
6	70057203	1	DOUBLE NOZZLE CAP BLUE LD 03
6	70057303	1	DOUBLE NOZZLE CAP RED LD 04
6	70057403	1	DOUBLE NOZZLE CAP BROWN LD 05

WWW.ROLTRONIK.PL

NOZZLE TUBES & HOLDER-PLASTIC
D1110-HIN, 01:01:16

Page 0

Date 16.03.2016 13:54

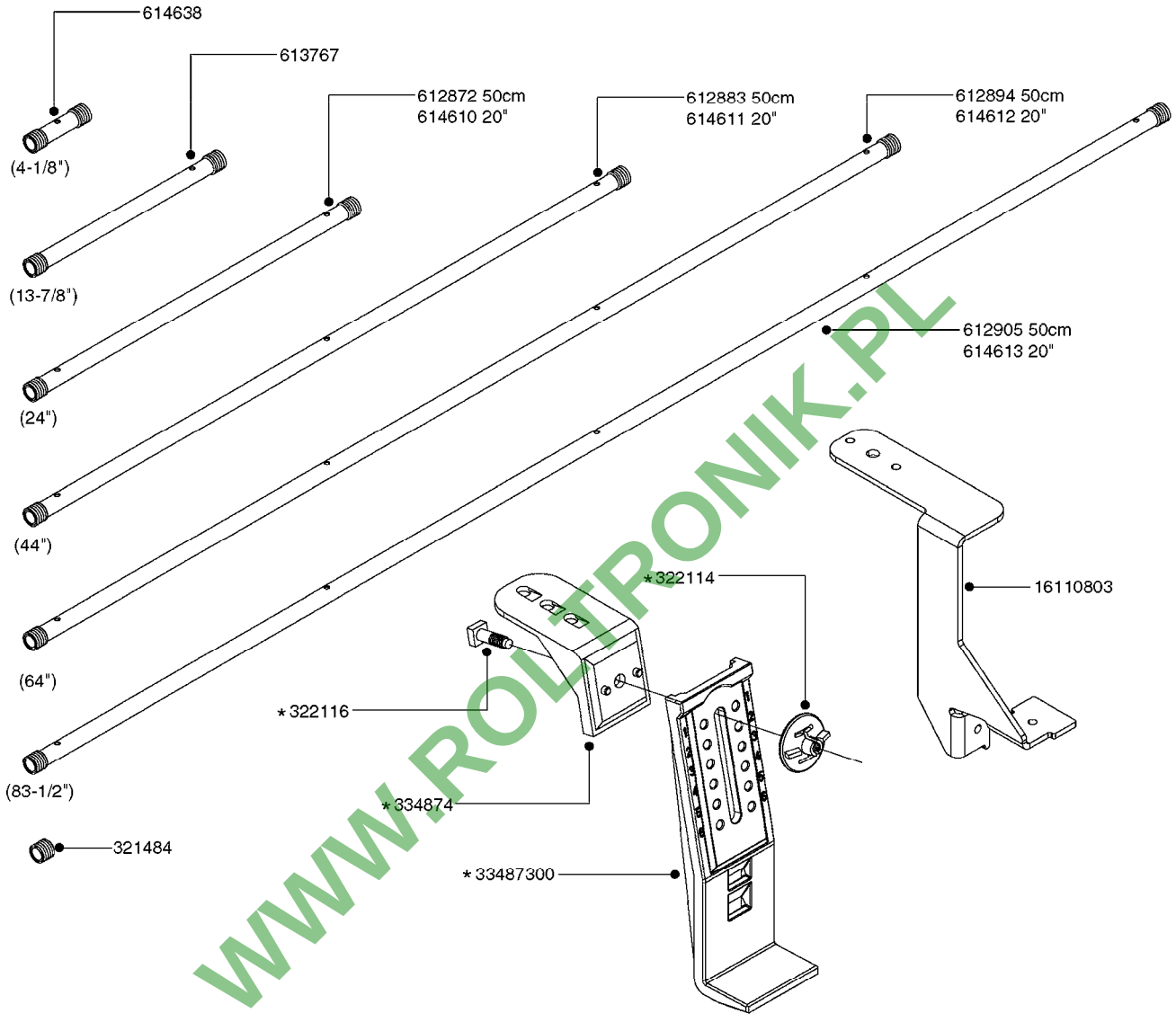

WWW.ROLTRONIK.PL

*741685 - BAG OF 5 COMPLETE
*741688 - BAG OF 10 COMPLETE

STAINLESS CLAMPS AND INSULATOR
100X60MM - 741778 BAG OF 10
80X60MM - 741741 BAG OF 10 — 80X60MM - 741738 BAG OF 5
50X50MM - 741737 BAG OF 10 — 50X50MM - 741734 BAG OF 5
50X30MM - 741733 BAG OF 10 — 50X30MM - 741730 BAG OF 5

BLANK TUBES:	DIMPLED TUBES:	
614647 - 23-3/4"	615468 - 24-1/2"	615471 - 64"
614648 - 43-1/4"	615469 - 44"	615472 - 74-1/4"
614649 - 63"	615470 - 54-1/8"	615473 - 92"
614650 - 82-1/2"		

D1110

parts-n°	order qty	description
321484	1	BUSHING THREADED F.NOZZ.TUBE
322114	1	NUT PLASTIC F.NOZZ.H
322116	1	BOLT PLASTIC F.NOZZ.H.
334874	1	NOZZLE HOLDER - TOP HALF
612872	1	NOZZLE TUBE 2 HOLE L-24"/50CM
612883	1	NOZZLE TUBE 3 HOLE L-44"/50CM
612894	1	NOZZLE TUBE 4 HOLE L-64"/50CM
612905	1	NOZZLE TUBE 5 HOLE L-83.5"/50C
613767	1	NOZZLE TUBE 1 HOLE L-13.875"
614610	1	NOZZLE TUBE 2 HOLE L-24"/SP20"
614611	1	NOZZLE TUBE 3 HOLE L-44"/SP20"
614612	1	NOZZLE TUBE 4 HOLE L-64"/SP20"
614613	1	NOZZLE TUBE 5 HOLE L-83.5"/20"
614638	1	NOZZLE TUBE 1 HOLE L-4.125"
614647	1	NOZZLE TUBE L=600mm NO HOLES
614648	1	NOZZLE TUBE L=1100mm NO HOLES
614649	1	NOZZLE TUBE L=1600mm NO HOLES
614650	1	NOZZLE TUBE L=2100mm NO HOLES
615468	1	NOZZLE TUBE MARKED 1" 24"
615469	1	NOZZLE TUBE MARKED 1" 44"
615470	1	NOZZLE TUBE MARKED 1" 54"
615471	1	NOZZLE TUBE MARKED 1" 64"
615472	1	NOZZLE TUBE MARKED 1" 74"
615473	1	NOZZLE TUBE MARKED 1" 92"
741685	1	NOZZLE HOLDER COMPLETE/5 PCS
741688	1	NOZZLE HOLDER COMPLETE/10PCS
741730	1	CLAMP,NZLE BKT BAG OF 5 50X30
741733	1	CLAMP,NZLE BKT BAG OF 10 50X30
741734	1	CLAMP,NZLE BKT BAG OF 5 50X50
741737	1	CLAMP,NZLE BKT BAG OF 10 50X50
741738	1	CLAMP,NZLE BKT BAG OF 5 80X60
741741	1	CLAMP,NZLE BKT BAG OF 10 80x60
741778	1	CLAMP,NZL BKT BAG OF 10 100x60
16110803	1	NOZZLE BRACKET VAR SPACINGS
33487300	1	NOZZLE HOLDER - BOTTOM HALF

WWW.BOLTRONIK.PL

HUB ASSEMBLE F.4-1/2" SPINDLE
E0790-HIN, 01:01:16

Page 0

Date 16.03.2016 13:54

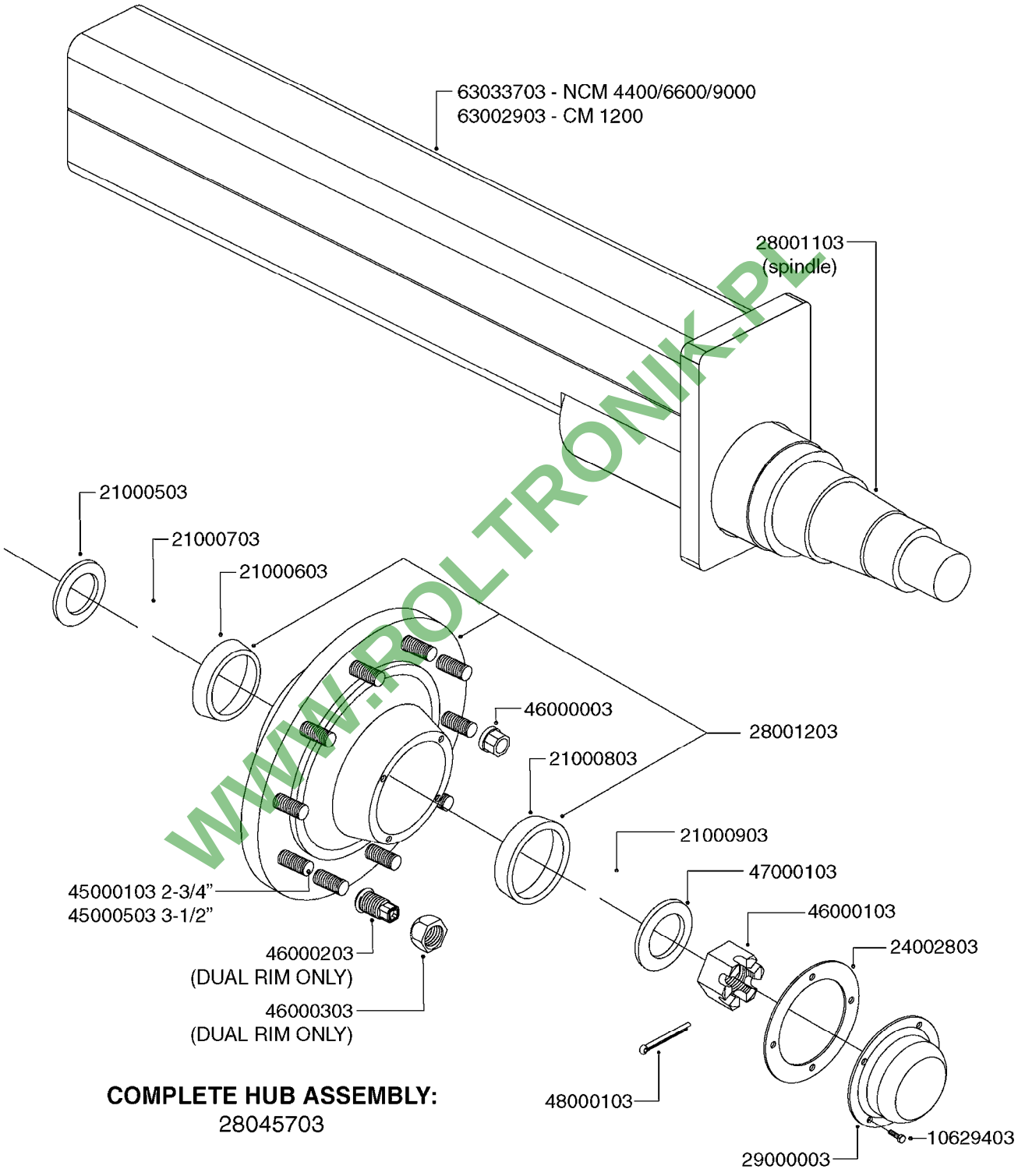

COMPLETE HUB ASSEMBLY:
28045703

COMPLETE ASSEMBLIES
WHOLEGOODS ITEMS

E0790

WWW.ROLTRONIK.PL

HUB ASSEMBLE F.4-1/2" SPINDLE
E0790-HIN, 01:01:16

Date 16.03.2016 13:54

parts-n°	order qty	description
10629403	1	BOLT HEX 5/16 NC GR.2 00.50"
21000503	1	SEAL,WHEEL CR43771
21000603	1	RACE, BEARING 3.5/1.5
21000703	1	BEARING, TAPPERED 3.5433/1.575
21000803	1	RACE, TAPERED BEARING
21000903	1	BEARING, TAPPERED, 2.75/1.510
24002803	1	GASKET F. HUB 4.5" HUB ASSY
28001103	1	SPINDLE 4.5"x 21" 20000LB
28001203	1	HUB, 20000LB W. BRG RACES
28045703	1	HUB ASSY 10-13.19-11.02 25000#
29000003	1	HUB CAP F. 881(20000LB) HUB
45000103	1	BOLT, WHEEL STUD 3/4-16X2 3/4
45000503	1	BOLT, WHEEL STUD 3/4-16X3 1/2
46000003	1	NUT HEX NF 3/4" FLANGED F.HUB
46000103	1	NUT, CASTLE, SPINDLE 2-12 UNF
46000203	1	NUT, BUD WHEEL, INNER, RH
46000303	1	NUT, BUD WHEEL, OUTER, RH
47000103	1	WASHER, SPNDL 4.5" 2.06x4 .25T
48000103	1	PIN, COTTER 5/16" X 5.25"
63002903	1	AXLE INSERT,72"-90"SUS CM 1200
63033703	1	AXLE INSERT NCM 44/66/9000

WWW.ROLTRONIK.PL

HARDI	**Agroparts: www.HARDI-INTERNATIONAL.com**	
	CAMOPLAST TRACK 40 SERIES E0810-HIN, 01:01:16	Page 0 Date 16.03.2016 13:54

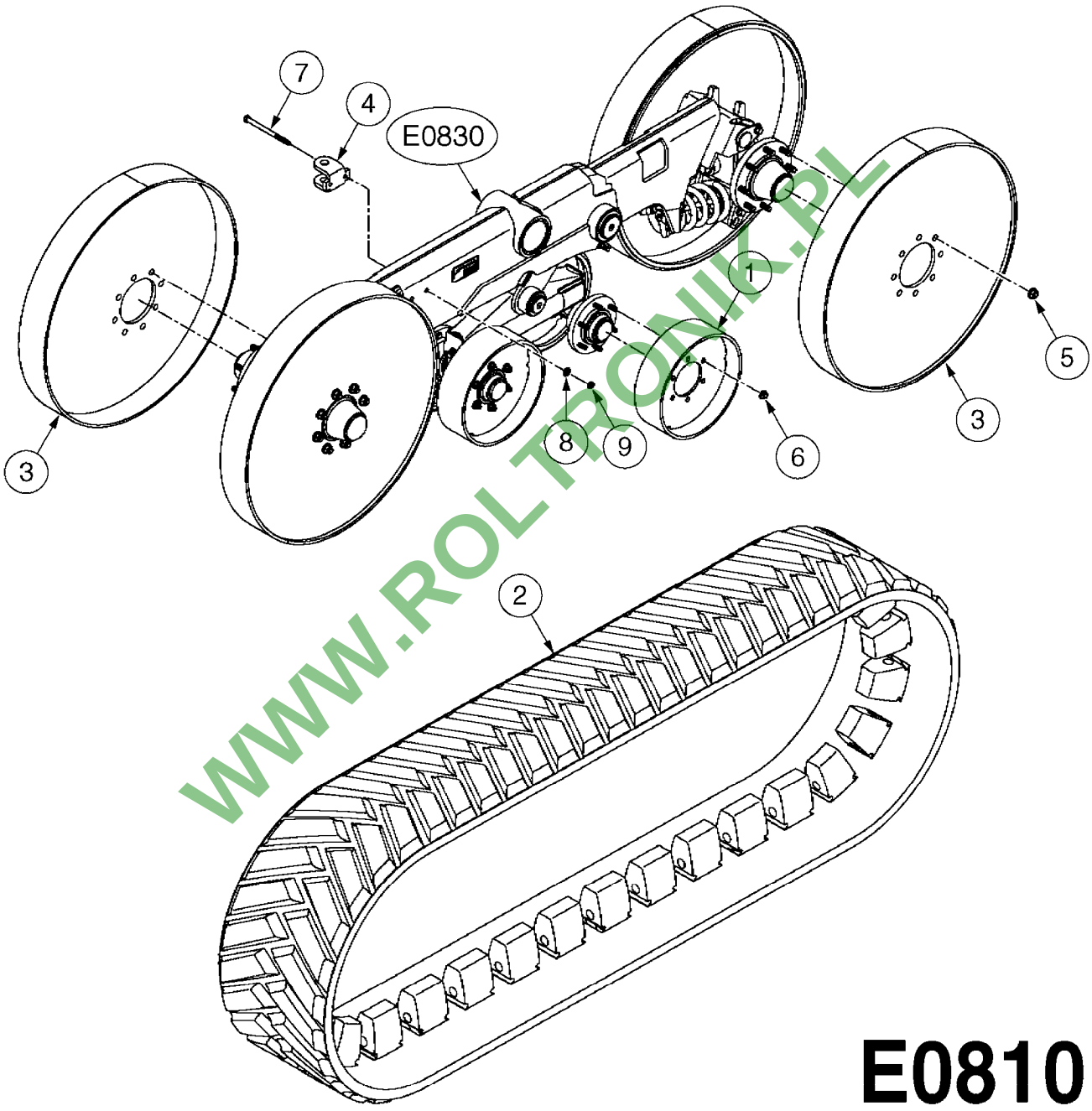

WWW.ROLTRONIK.PL

E0810

Pos.	parts-n°	order qty	description
1	28064103	1	WHEEL, MID-ROLLER (1401,1402)
1	28064203	1	WHEEL, MID-ROLLER(45-1801)
2	28074703	1	TRACK LH 249" X 14" (40-1402)
2	28074803	1	TRACK RH 249" X 14" (40-1402)
2	28075103	1	TRACK 249" X 18" (45-1801)
3	28075203	1	WHEEL, IDLER (40-1402)
3	28075303	1	WHEEL, IDLER (45-1801)
4	28075403	1	BRACE BRACKET
5	28082103	1	LUG NUT SET (8) IDLER
6	28083003	1	LUG NUT SET (6) MID-ROLLER
7	28083203	1	BOLT HEX 7"X1/2"-20 UNF GR 8
8	28083303	1	WASHER 1/2"
9	28083403	1	LOCK NUT 1/2"-20 UNF

WWW.ROLTRONIK.PL

HARDI	**Agroparts: www.HARDI-INTERNATIONAL.com**	
	CAMOPLAST FRAME 40 SERIES E0830-HIN, 01:01:16	Page 0 Date 16.03.2016 13:54

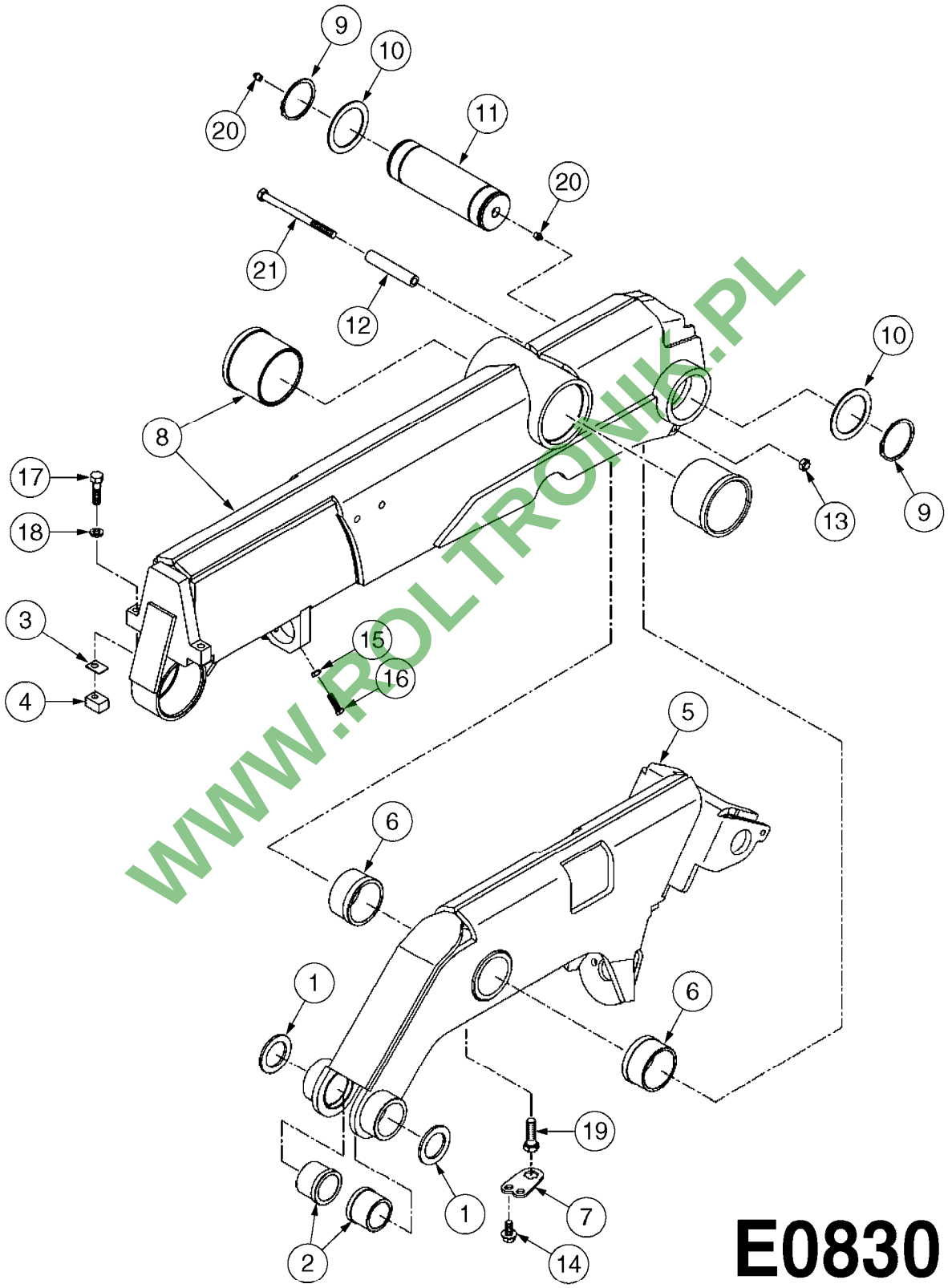

WWW.ROLTRONIK.PL

E0830

Pos.	parts-n°	order qty	description
1	28076003	1	WASHER,3"X2.02"X3/16"
2	28076303	1	BUSHING 2.55"ODX2.012ID"X2"
3	28076403	1	SHIM, TILT STOPPER
4	28076503	1	STOPPER, TILT
5	28076603	1	TENSION ARM (40 SERIES)
6	28076703	1	BUSHING, TENS. 3.48X3.15X1.98"
7	28076803	1	LOCK PLATE
8	28076903	1	FRAME W/BUSHINGS (40 SERIES)
9	28077003	1	SNAP RING EXT. 3"
10	28077103	1	WASHER
11	28077203	1	PIN, 3" OD X 9.56"
12	28077303	1	SPACER
13	28083403	1	LOCK NUT 1/2"-20 UNF
14	28083503	1	BOLT HEX FLG.1"X1/2"-13UNC GR5
15	28083603	1	JAM NUT 3/8"-16 UNC GR 8
16	28083703	1	SET SCREW 1-1/2"X3/8"-16 UNC
17	28083803	1	BOLT HEX 2"X1/2"-13 UNC
18	28083903	1	LOCK WASHER 1/2"
19	28084003	1	BOLT HEX 2" X 5/8"-11
20	28084103	1	GREASE FITTING
21	28084203	1	BOLT HEX 6-1/2"X1/2"-20UNF GR8

WWW.ROLTRONIK.PL

	Agroparts: www.HARDI-INTERNATIONAL.com	
	CAMOPLAST TENSION LINK ASSY. E0840-HIN, 01:01:16	Page 0 Date 16.03.2016 13:54

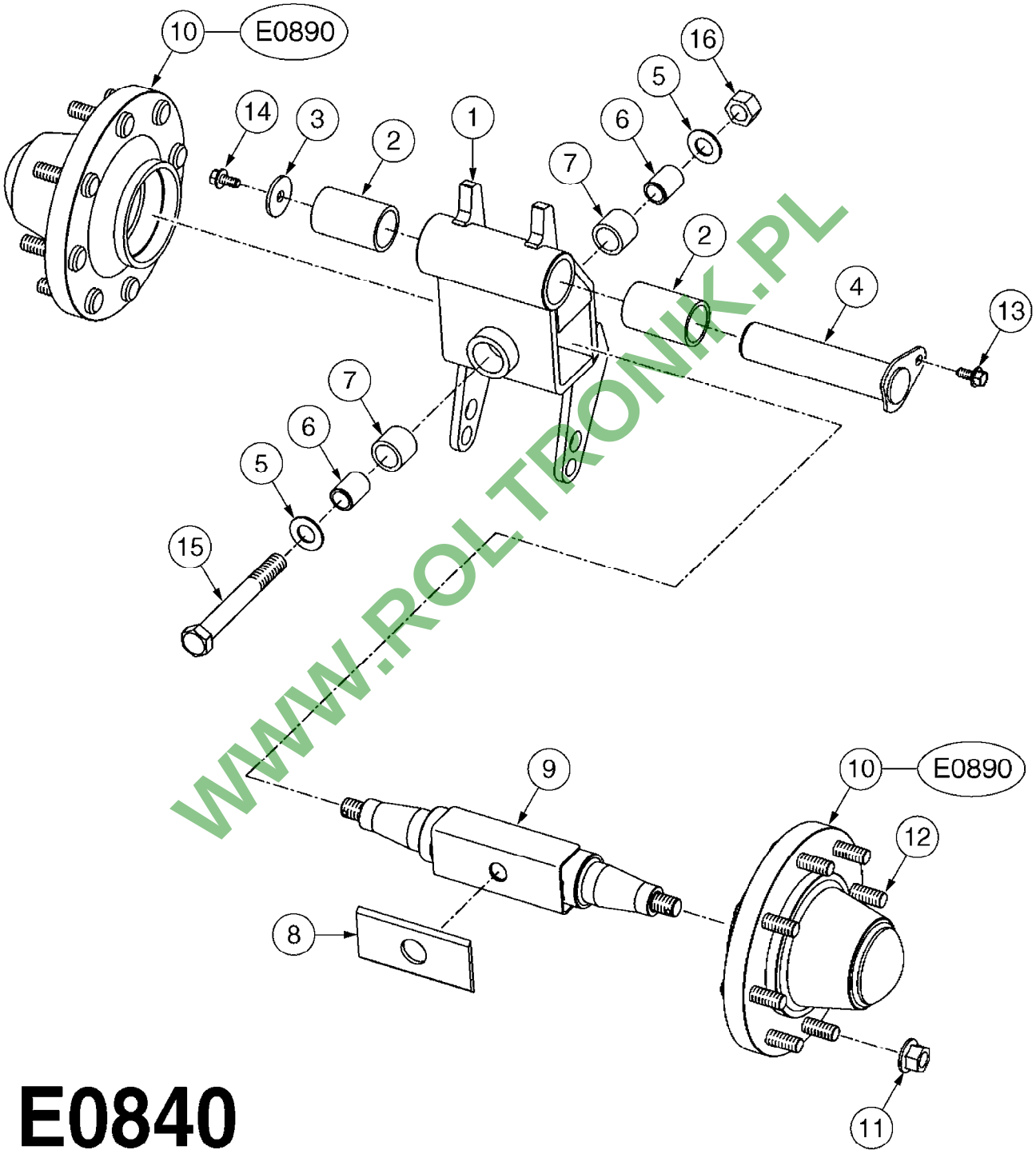

WWW.ROLTRONIK.PL

E0840

CAMOPLAST TENSION LINK ASSY.
E0840-HIN, 01:01:16

Pos.	parts-n°	order qty	description
1	28077403	1	TENSION LINK
2	28077503	1	BUSHING 2.5"ODX0.25"WX3.94"
3	28077603	1	RETAINER PLATE
4	28077703	1	PIN
5	28077803	1	WASHER 1.062"ID X 2"OD
6	28077903	1	BUSHING 1.375" X 1.88" LG
7	28078003	1	BUSHING 1.875"ODX0.25"WTX1.55"
8	28078103	1	WEAR PAD
9	28078203	1	AXLE
10	28078303	1	HUB ASSY.IDLER, G60-8 HUB COMPLETE W/LUG NUTS
11	28082103	1	LUG NUT SET (8) IDLER HUB COMPLETE W/LUG NUTS
12	28082203	1	WHEEL STUD SET (8) IDLER HUB COMPLETE W/LUG NUTS
13	28083503	1	BOLT HEX FLG.1"X1/2"-13UNC GR5 HUB COMPLETE W/LUG NUTS
14	28084303	1	BOLT HEX FLG.1"X5/8"-11UNC GR8 HUB COMPLETE W/LUG NUTS
15	28084403	1	BOLT HEX 8"X1"-8 UNC HUB COMPLETE W/LUG NUTS
16	28084503	1	NUT 1"-8 UNC GR 8 HUB COMPLETE W/LUG NUTS

WWW.ROLTRONIK.PL

	Agroparts: www.HARDI-INTERNATIONAL.com	
HARDI	CAMOPLAST TENSIONER ASSEMBLY E0850-HIN, 01:01:16	Page 0 Date 16.03.2016 13:54

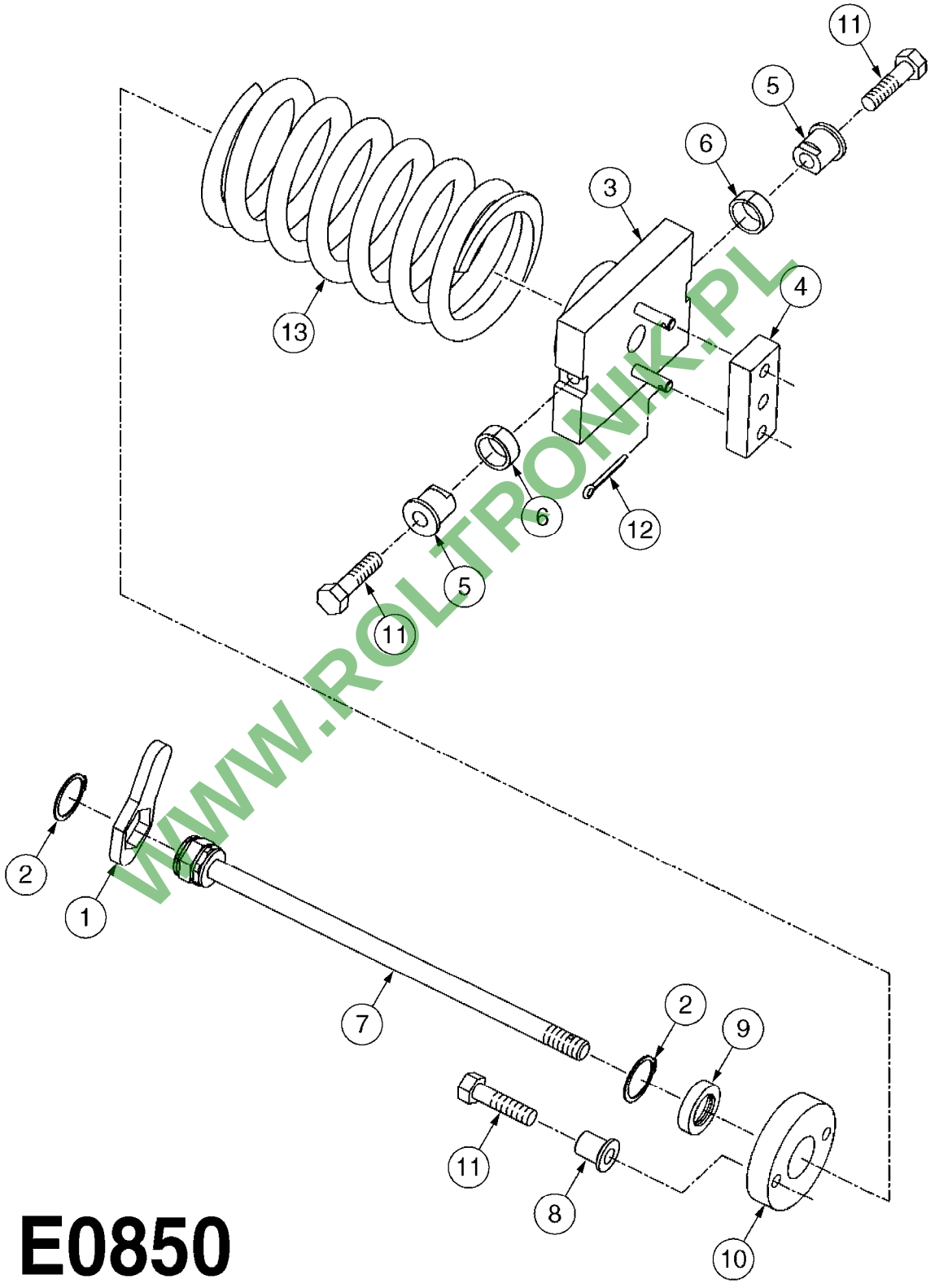

WWW.ROLTRONIK.PL

E0850

CAMOPLAST TENSIONER ASSEMBLY
E0850-HIN, 01:01:16

Pos.	parts-n°	order qty	description
1	28074003	1	LOCK PLATE
2	28074103	1	SNAP RING
3	28078403	1	SPRING MOUNT
4	28078503	1	RETAINER PLATE
5	28078603	1	SLEEVE W/NOTCH
6	28078703	1	BUSHING 1/2"X1-1/4"ODX1"ID
7	28078803	1	ACME SCREW
8	28078903	1	SLEEVE,EXTEN.1"X1/2"IDX1.04"OD
9	28079003	1	SEAT, WASHER
10	28079103	1	SPRING PILOT
11	28083803	1	BOLT HEX 2"X1/2"-13 UNC
12	28084603	1	COTTER PIN 1-1/4" X 5/32"
13	28085103	1	SPRING
			SPRING FOR 30 SERIES
13	28085203	1	SPRING 9" X 5" X 3/4"
			SPRING FOR 40 SERIES

WWW.ROLTRONIK.PL

	Agroparts: www.HARDI-INTERNATIONAL.com	
HARDI	CAMOPLAST ALIGNMENT ASSEMBLY E0860-HIN, 01:01:16	Page 0 Date 16.03.2016 13:54

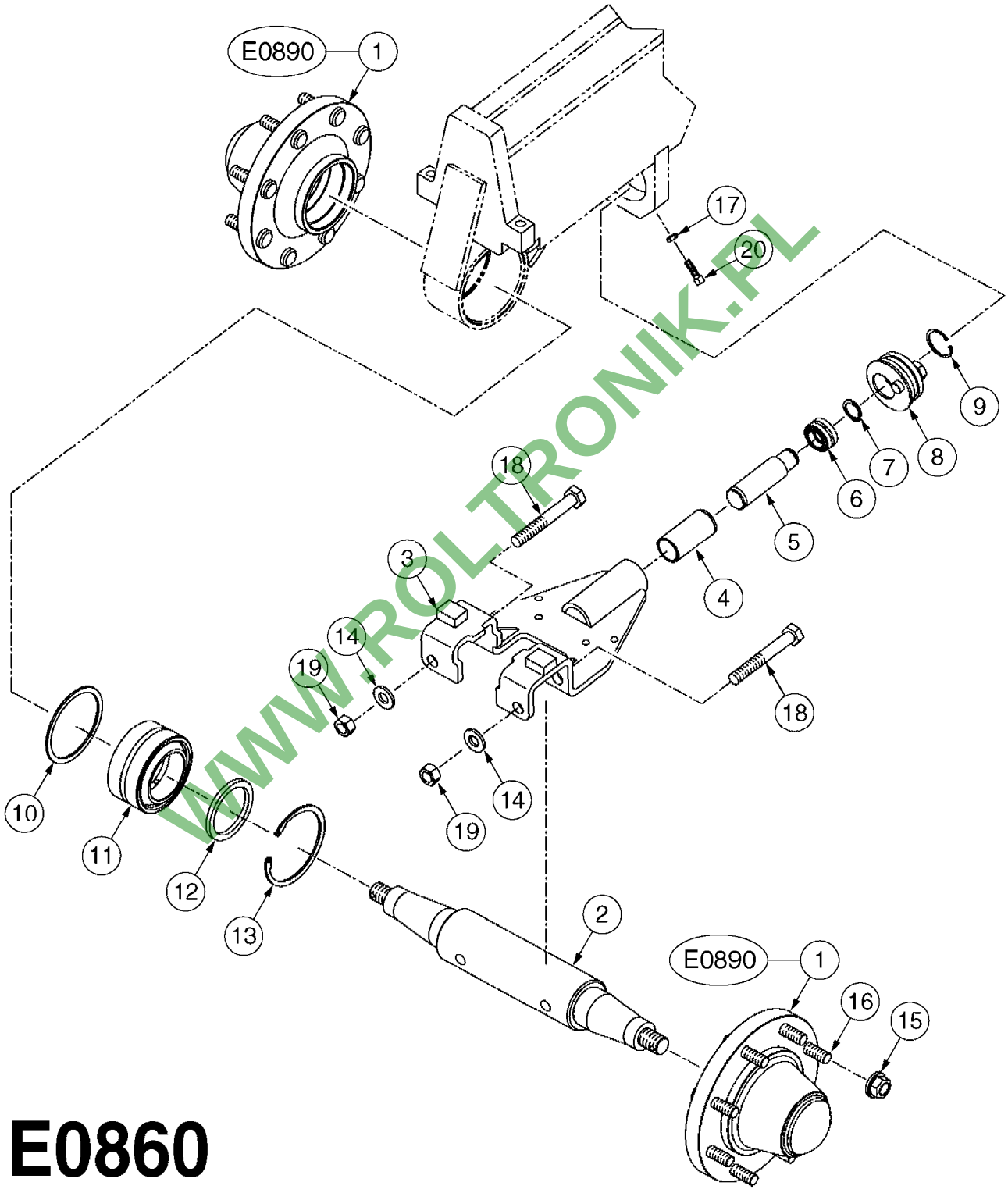

WWW.ROLTRONIK.PL

E0860

Pos.	parts-n°	order qty	description
1	28078303	1	HUB ASSY.IDLER, G60-8 HUB COMPLETE W/LUG NUTS
2	28079203	1	AXLE, FRONT IDLER HUB COMPLETE W/LUG NUTS
3	28079303	1	ALIGNMENT FRAME HUB COMPLETE W/LUG NUTS
4	28079403	1	ALIGNMENT BUSHING HUB COMPLETE W/LUG NUTS
5	28079503	1	ALIGNMENT PIN HUB COMPLETE W/LUG NUTS
6	28079603	1	BEARING 1"IDX1.625"ODX0.875" HUB COMPLETE W/LUG NUTS
7	28079703	1	SNAP RING EXT. 1" HUB COMPLETE W/LUG NUTS
8	28079803	1	DISC, ECCENTRIC HUB COMPLETE W/LUG NUTS
9	28079903	1	SNAP RING, INT. 1-3/4" HUB COMPLETE W/LUG NUTS
10	28080003	1	SHIM, 12 GAUGE HUB COMPLETE W/LUG NUTS
11	28080103	1	BEARING 3"IDX4.75"ODX2.625" HUB COMPLETE W/LUG NUTS
12	28080203	1	WASHER, 1/4" HUB COMPLETE W/LUG NUTS
13	28080303	1	SNAP RING HUB COMPLETE W/LUG NUTS
14	28081203	1	WASHER21/32"IDX1-5/16"ODX0.146 HUB COMPLETE W/LUG NUTS
15	28082103	1	LUG NUT SET (8) IDLER HUB COMPLETE W/LUG NUTS
16	28082203	1	WHEEL STUD SET (8) IDLER HUB COMPLETE W/LUG NUTS
17	28083603	1	JAM NUT 3/8"-16 UNC GR 8 HUB COMPLETE W/LUG NUTS
18	28084703	1	BOLT 4-1/2" X 5/8"-11 UNC HUB COMPLETE W/LUG NUTS
19	28084803	1	NUT 5/8"-11 UNC GR 8 HUB COMPLETE W/LUG NUTS
20	28084903	1	SET SCREW SQ.HD.1-1/2"X3/8"-16 HUB COMPLETE W/LUG NUTS

WWW.PO-TRONIK.PL

	Agroparts: www.HARDI-INTERNATIONAL.com	
HARDI	CAMOPLAST BOGIE MID-ROLLER 40 E0880-HIN, 01:01:16	Page 0 Date 16.03.2016 13:54

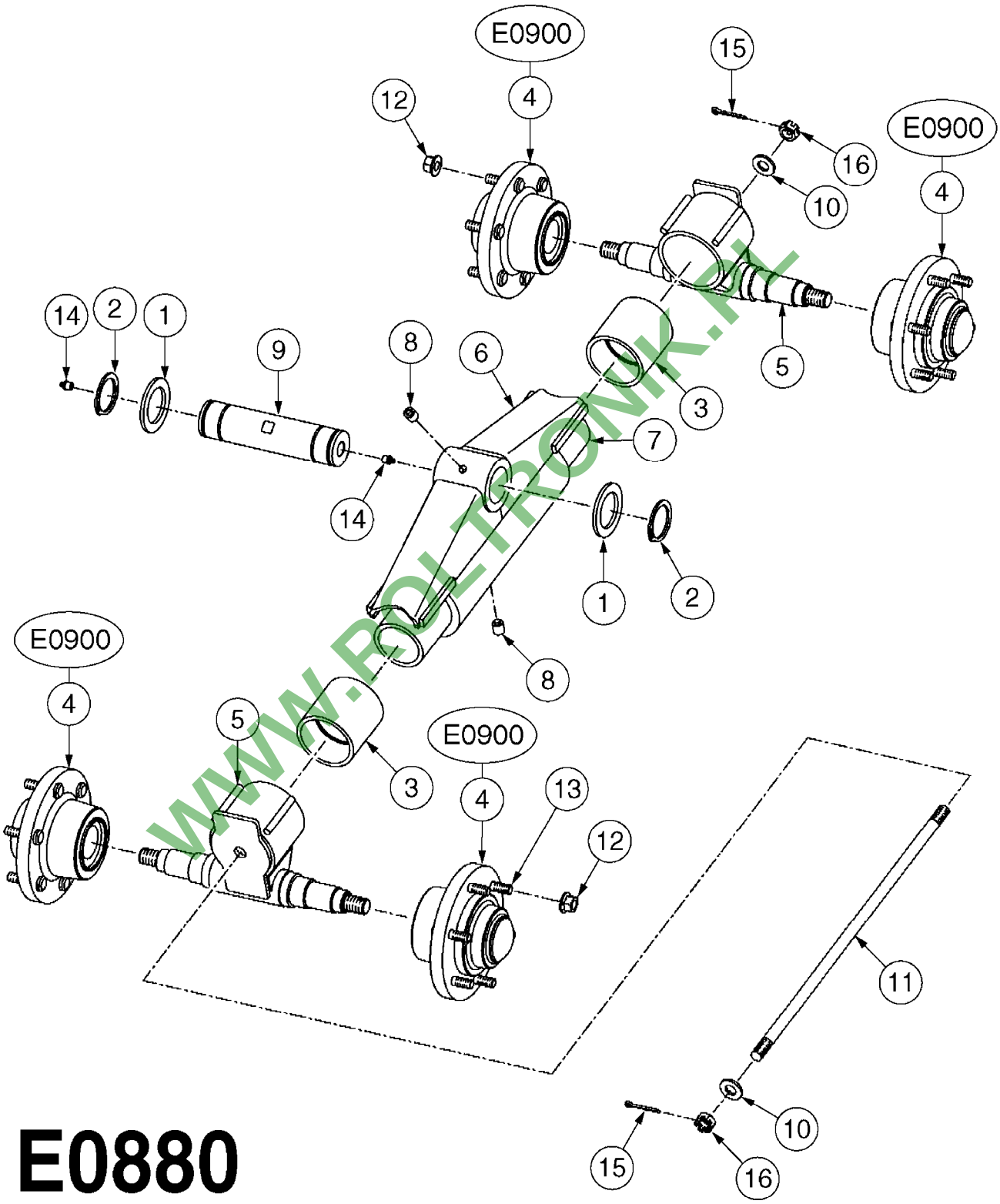

WWW.ROLTRONIK.PL

E0880

CAMOPLAST BOGIE MID-ROLLER 40
E0880-HIN, 01:01:16

Pos.	parts-n°	order qty	description
1	28076003	1	WASHER,3"X2.02"X3/16"
2	28076103	1	SNAP RING EXT. 2"
3	28080503	1	BUSHING
4	28080603	1	HUB ASSY.MID-ROLLER
			HUB COMPLETE W/LUG NUTS
5	28080703	1	MID-ROLLER DOGHOUSE(40 SERIES)
			HUB COMPLETE W/LUG NUTS
6	28080803	1	HOUSING, BOGIE
			HUB COMPLETE W/LUG NUTS
7	28080903	1	AXLE, MID-ROLLER
			HUB COMPLETE W/LUG NUTS
8	28081003	1	SET SCREW, 3/4"X1/2"-13 UNC
			HUB COMPLETE W/LUG NUTS
9	28081103	1	PIN, BOGIE
			HUB COMPLETE W/LUG NUTS
10	28081203	1	WASHER21/32"IDX1-5/16"ODX0.146
			HUB COMPLETE W/LUG NUTS
11	28081303	1	RETAINER ROD
			HUB COMPLETE W/LUG NUTS
12	28083003	1	LUG NUT SET (6) MID-ROLLER
			HUB COMPLETE W/LUG NUTS
13	28083103	1	WHEEL STUD SET (6) MID-ROLLER
			HUB COMPLETE W/LUG NUTS
14	28084103	1	GREASE FITTING
			HUB COMPLETE W/LUG NUTS
15	28084603	1	COTTER PIN 1-1/4" X 5/32"
			HUB COMPLETE W/LUG NUTS
16	28085003	1	CASTLE NUT 5/8"-11 UNC GR 5
			HUB COMPLETE W/LUG NUTS

WWW.ROTTRONIK.PL

	Agroparts: www.HARDI-INTERNATIONAL.com	
HARDI	CAMOPLAST HUB ASSEMBLY - IDLER E0890-HIN, 01:01:16	Page 0 Date 16.03.2016 13:54

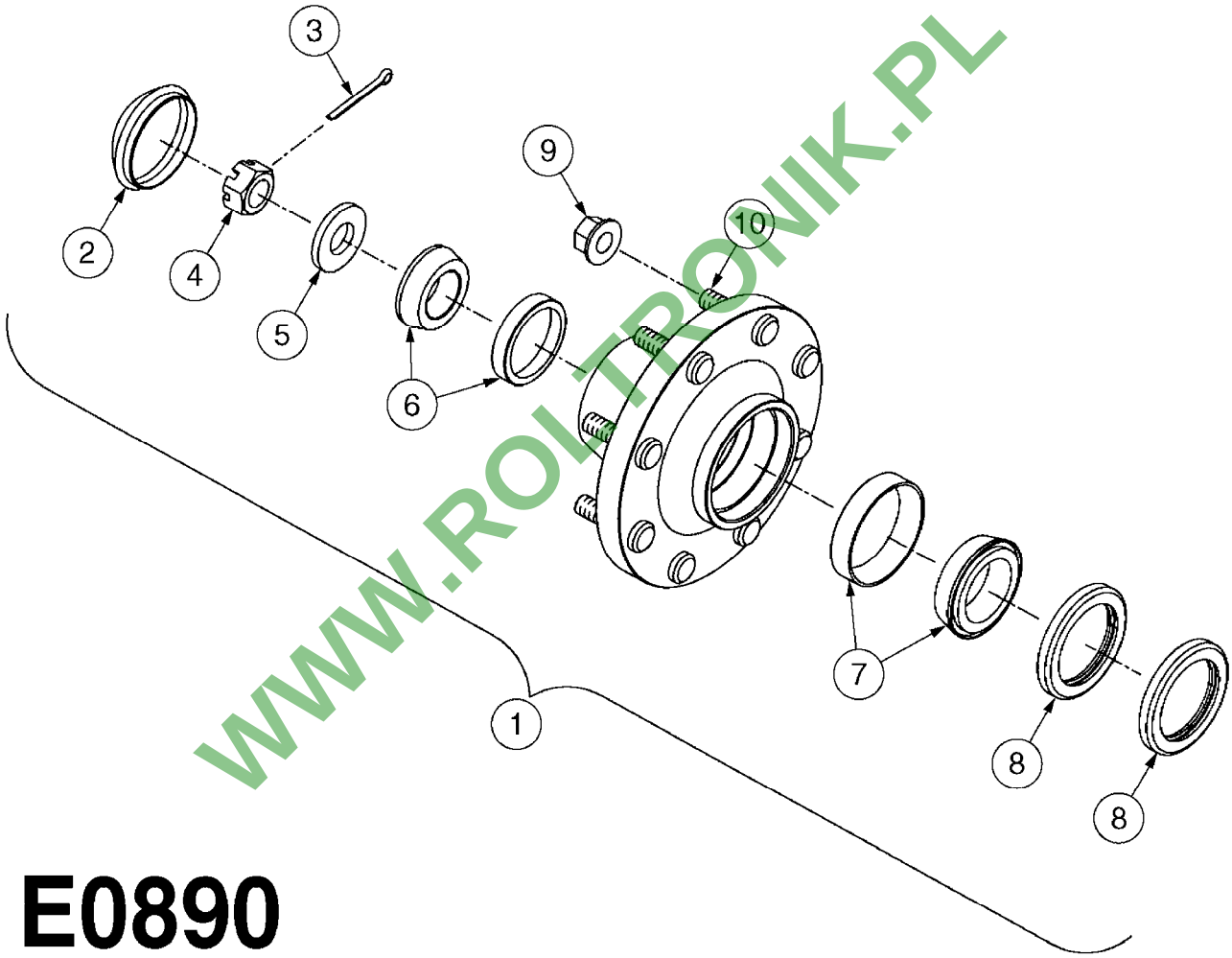

WWW.ROLTRONIK.PL

E0890

CAMOPLAST HUB ASSEMBLY - IDLER
E0890-HIN, 01:01:16

Pos.	parts-n°	order qty	description
1	28078303	1	HUB ASSY.IDLER, G60-8
2	28081403	1	DUST CAP
3	28081503	1	COTTER PIN 7/32" X 2-1/4"
4	28081603	1	CASTLE NUT 1-1/4"-12
5	28081703	1	WASHER 1.28"IDX2.5"ODX0.13"
6	28081803	1	BEARING ASSEMBLY - OUTER
7	28081903	1	BEARING ASSEMBLY - INNER
8	28082003	1	WHEEL SEAL, SINGLE LIP
9	28082103	1	LUG NUT SET (8) IDLER
10	28082203	1	WHEEL STUD SET (8) IDLER

WWW.ROLTRONIK.PL

	Agroparts: www.HARDI-INTERNATIONAL.com	
HARDI	CAMOPLAST HUB ASSY. MID-ROLLER E0900-HIN, 01:01:16	Page 0 Date 16.03.2016 13:54

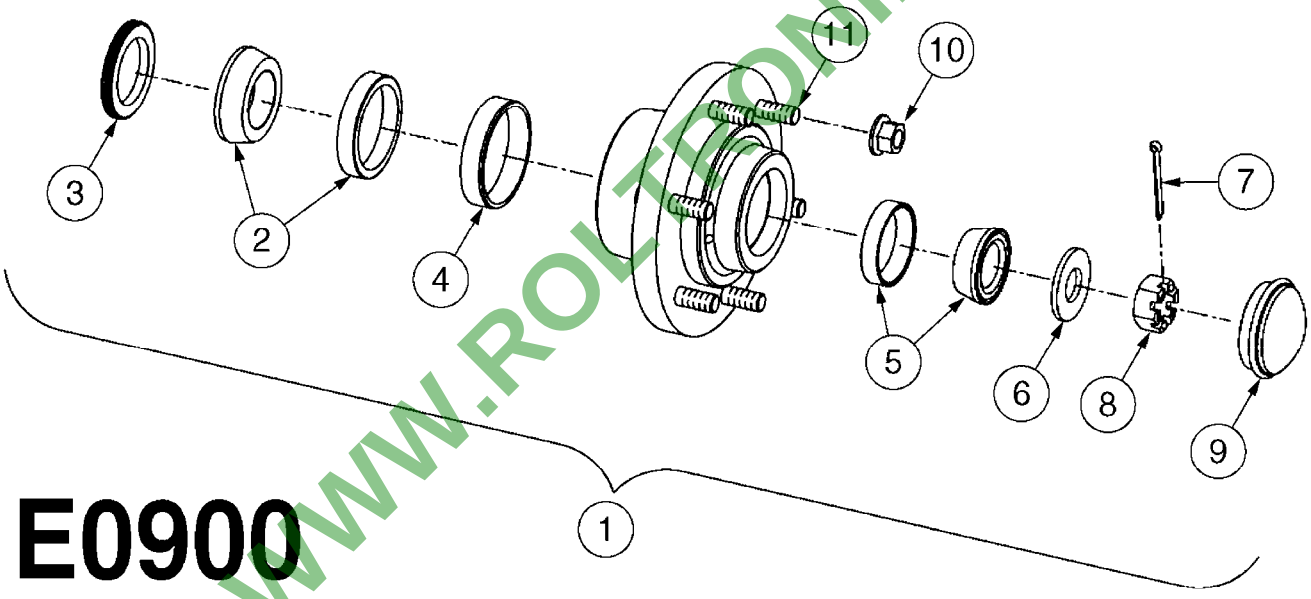

E0900

WWW.ROLTRONIK.PL

CAMOPLAST HUB ASSY. MID-ROLLER
E0900-HIN, 01:01:16

Pos.	parts-n°	order qty	description
1	28080603	1	HUB ASSY.MID-ROLLER
2	28081803	1	BEARING ASSEMBLY - OUTER
3	28082303	1	WHEEL SEAL, TRIPLE LIP
4	28082403	1	WEAR RING
5	28082503	1	BEARING ASSEMBLY, 783 OUTER
6	28082603	1	WASHER 0.94"IDX2"ODX0.16"
7	28082703	1	COTTER PIN 1-3/4" X 5/32"
8	28082803	1	CASTLE NUT 7/8"-14 UNF
9	28082903	1	DUST CAP 2-3/4"OD X 2-7/16"
10	28083003	1	LUG NUT SET (6) MID-ROLLER
11	28083103	1	WHEEL STUD SET (6) MID-ROLLER

WWW.ROLTRONIK.PL

TANK NCM 4400/6600/9000
E0980-HIN, 01:01:16

Page 0

Date 16.03.2016 13:55

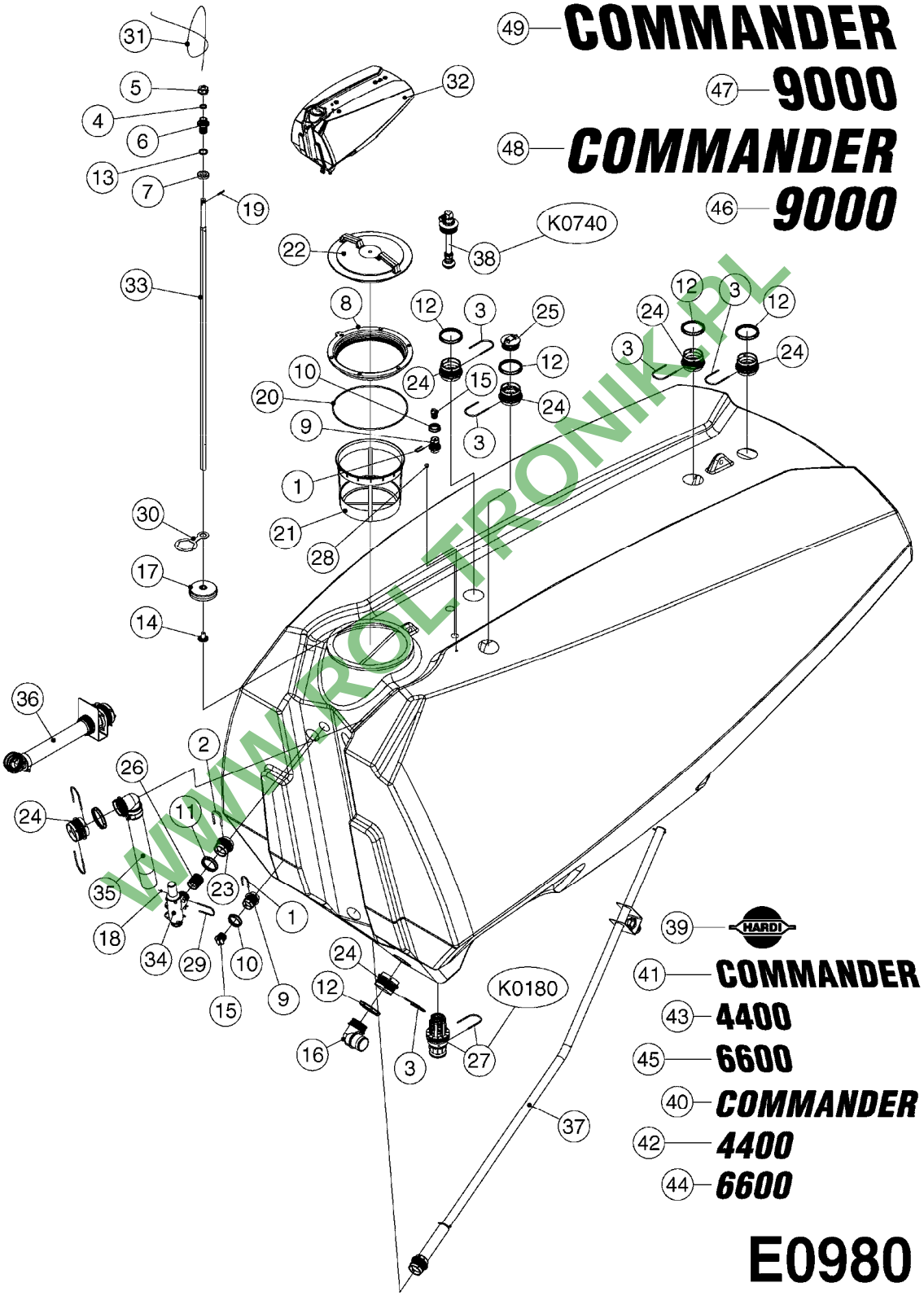

WWW.ROLTRONIK.PL

TANK NCM 4400/6600/9000
E0980-HIN, 01:01:16

Pos.	parts-n°	order qty	description
1	145994	1	FITT.DK S-40 FORK
2	145996	1	FITT.DK S-67 FORK
3	145997	1	FITT.DK S-93 FORK
4	242309	1	SEAL Ø22 ID Ø30 OD X 4 HIGH
5	320095	1	FITT.DK NUT 1" BSP
6	320456	1	FITT.DK BULKHEAD 1"BSP DOUBLE
7	320471	1	FITT.DK NUT 1" BSP JAMB
8	322097	1	THREADED RING F. LID
9	322102	1	FITT.DK S-40 BULKHEAD
10	322106	1	FITT.DK S-40 BULKHEAD NUT
11	322108	1	FITT.DK S-67 BULKHEAD NUT
12	322109	1	FITT.DK S-93 BULKHEAD NUT
13	332577	1	O-RING D38/D30X4 F.1" PUR.
14	333864	1	GUIDE F. SAFETY VALVE SPRING
15	334248	1	FITT.DK S-40 PLUG
16	334340	1	FITT.DK S-93 ELBOW 2.5"
17	334515	1	FLOATER FOR LIQUID LEVEL
18	461217	1	NUT HEX M5 LOCK
19	480717	1	PIN D5 X 40 STAINLESS
20	614588	1	SEAL F. LID
21	614602	1	FILTER BASKET
22	726003	1	LID F. TANK
23	726464	1	FITT.DK S-67 BULKHEAD W/GASKET
24	726465	1	FITT.DK S-93 BULKHEAD W/GASKET
25	726580	1	FITT. S93 PLUG W/O-RING
26	728526	1	FITT.DK S-67 CONNECT W. ORINGS
27	730084	1	BOTTOM VALVE S93 2"RG-3M
28	14001500	1	GROMMET F.TOP DRAIN CORD
29	14012200	1	FITT.DK S-67 FORK W/M5 THREADS
30	16025500	1	TANK SPACER SIGHT GAUGE
31	28034100	1	CABLE F.LIQUID LEVEL IND.L=5M
32	35002004	1	TANK RAW 9000 NCM
32	73128700	1	TANK CM 4400 '15 ASSEMBLY
32	72265500	1	TANK NCM 6600 ASSEMBLY
33	61036700	1	GUIDE TUBE F.FLOAT NCM 4400
33	61038600	1	GUIDE TUBE F.FLOAT NCM 9000
33	61038700	1	GUIDE TUBE F.FLOAT NCM 6600
34	72280300	1	SAFTY VALVE S67 15 BAR CM'05
35	72317500	1	SUCT. HOSE 2-1/2"X1100 S39/90
36	72317600	1	SUCT. HOSE 2"X900/S39-S93
37	72356900	1	PRESSURE AGITATION CM 6600
37	72538900	1	PRESSURE AGITATION CM 4400
38	72358000	1	TANK RINSE LOW MOD.ASSMBLY NCM
39	97811600	1	DECAL COMPANY 335MM X 210MM
40	97811700	1	DECAL COMMANDER LEFT HAND
41	97811800	1	DECAL COMMANDER RIGHT HAND
42	97812100	1	DECAL 4400 LEFT HAND
43	97812200	1	DECAL 4400 RIGHT HAND
44	97813800	1	DECAL 6600 LEFT HAND
45	97813900	1	DECAL 6600 RIGHT HAND
46	97815000	1	DECAL 9000 LEFT
47	97815100	1	DECAL 9000 RIGHT
48	97815200	1	DECAL COMMANDER LEFT 145%
49	97815300	1	DECAL COMMANDER RIGHT 145%

WWW.PCZ-TRONIK.PL

LOCKER & CLEAN WATER TANK NCM
E0990-HIN, 01:01:16

Page 0

Date 16.03.2016 13:55

Complete

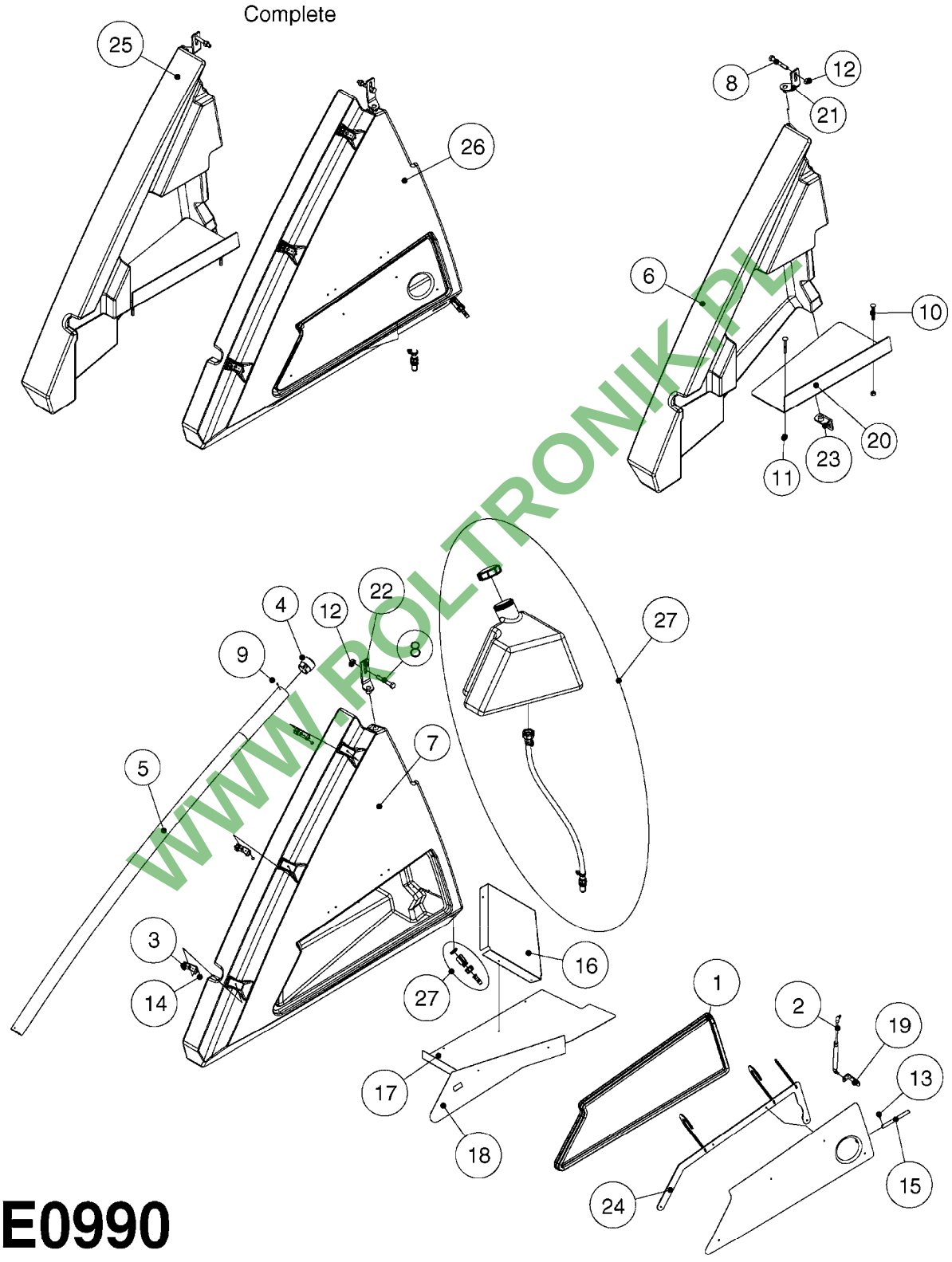

WWW.ROLTRONIK.PL

E0990

LOCKER & CLEAN WATER TANK NCM
E0990-HIN, 01:01:16

Pos.	parts-n°	order qty	description
1	242474	1	SEAL 16X28XL=' LOCKER DOOR CM+
2	285793	1	GAS CYLINDER
3	334523	1	PIPE HOLDER D51.5
4	334850	1	GUIDE F. SIGHT GAUGE TUBE TOP
5	341307	1	TUBE F.SIGHT GAUGE L=75" NCM 4400
5	341339	1	TUBE F.SIGHT GAUGE L=82" NCM 6600
5	341340	1	TUBE F.SIGHT GAUGE L=94"(2382) NCM 9000
5	89109004	1	DECAL SIGHT GAUGE 9000 LITERS
5	97609403	1	DECAL SIGHT GAUGE CM4400 GAL.
5	97609803	1	DECAL SIGHT GAUGE CM6600 GAL.
5	97610003	1	DECAL SIGHT GAUGE NCM 9000 GAL
5	97808000	1	DECAL SIGHT GAUGE CM4400 LITER
5	97813700	1	DECAL SIGHT GAUGE CM6600 LITER
6	351766	1	SIDE SHIELD MOUNT RIGHT
7	351767	1	SIDE SHIELD MOUNT LEFT
8	430846	1	BOLT HEX 8.8 DEL M12X80
9	440333	1	SCREW 3.5 X 9.5 SS
10	440718	1	BOLT CRG M10 X 65 DEL
11	460423	1	NUT HEX M10X1.5 LOCK
12	460703	1	NUT HEX M12X1.75 LOCK DIN985
13	480141	1	PIN COTTER M4X20
14	480809	1	BLIND RIVET, EMHART ACD616ASM
15	15057800	1	HANDLE F.LEFT SIDE LOCKER
16	16124500	1	DIVIDER F.LOCKER L.SIDE SHIELD
17	16124600	1	SHELF FLOOR-LEFT SIDE LOCKER
18	16124700	1	SHELF WALL-LEFT SIDE LOCKER
19	16126900	1	BRACKET F.DOOR-STORAGE LOCKER
20	16127300	1	SHELF FLOOR-RIGHT SIDE LOCKER
21	61033900	1	BRACKET F. SIDE PANEL R.H. NCM
22	61034000	1	BRACKET F. SIDE PANEL L.H. NCM
23	61037500	1	ADJUSTING BRACKET, BOTTOM NCM
24	63037800	1	BRACKET F.DOOR-STORAGE LOCKER
25	72280100	1	SIDE SHIELD RIGHT NCM COMPLETE
26	72280200	1	SIDE SHIELD LEFT+CLEAN W.TANK
27	72280600	1	CLEAN W.TANK LEFT SIDE NCM

WWW.ROTRONIK.PL

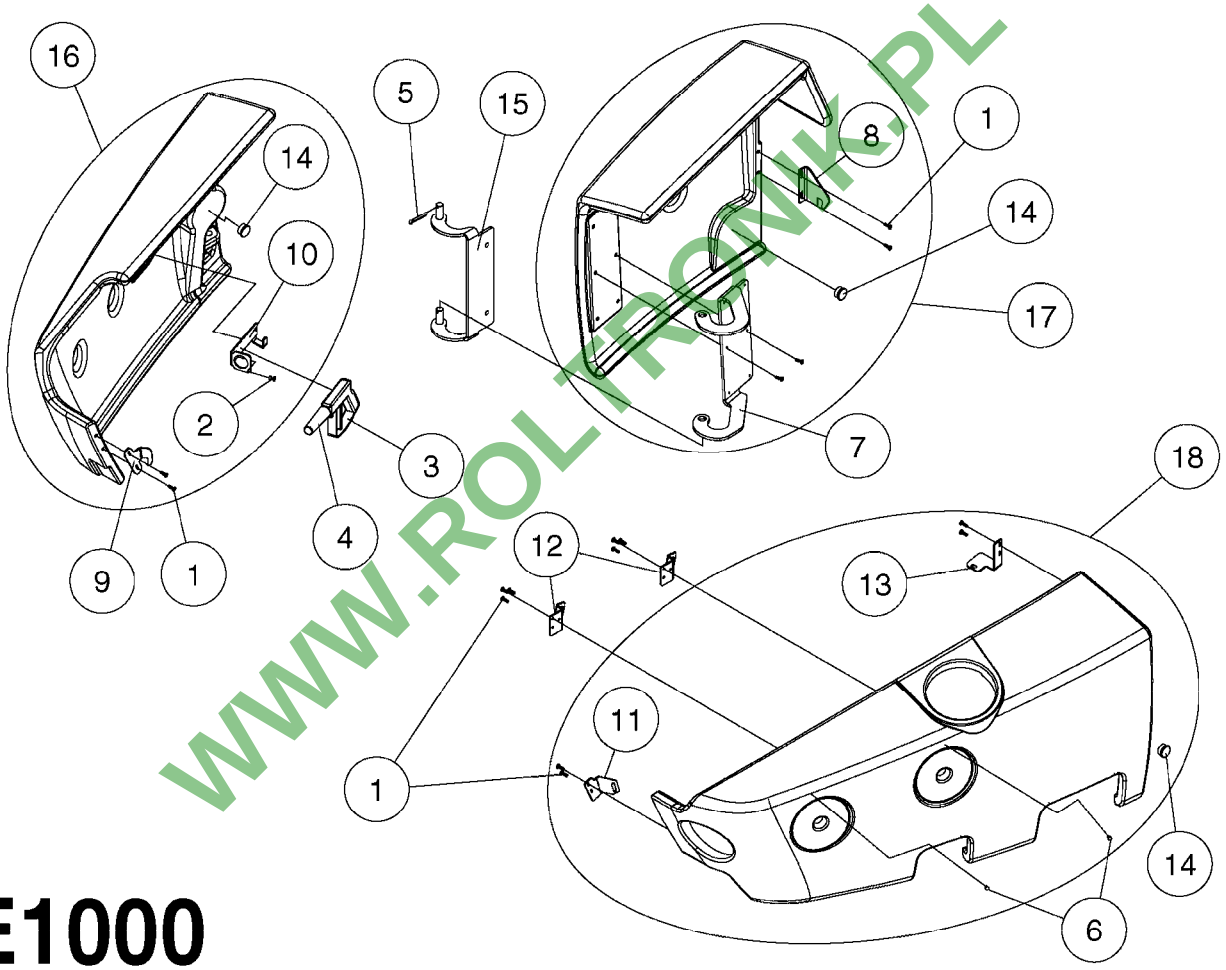

WWW.ROLTRONIK.PL

E1000

SHIELDS NCM 4400/6600/9000
E1000-HIN, 01:01:16

Pos.	parts-n°	order qty	description
1	440719	1	SCREW F.PLASTIC KB60x20 SS
2	480809	1	BLIND RIVET, EMHART ACD616ASM
3	725663	1	PISTOL 60 COVER PART
4	725664	1	FRONTPART F.SPRAY GUN MODEL 60
5	10008603	1	COTTER PIN 1/8"X 1-1/2"
6	14042800	1	INDICATOR FOR VALVE POSITION
7	16133800	1	HINGE F.GREY SHIELD CM '05
8	16133900	1	HOOK F.GREY SHIELD CM '05
9	16134000	1	BKT F. FRONT RH COVER NCM
10	16134100	1	BRACKET. HAND GUN HOLDER NCM
11	16135300	1	BKT F. FRONT LH COVER NCM
12	16135400	1	MIDDLE HANGER LEFT GRAY SIDE
13	16135500	1	BKT F. FRONT LH COVER NCM
14	28046900	1	COVER PLUG 1" BLACK
15	61035500	1	HINGE BRACKET FOR CM05 LOCKER
16	72294000	1	SHEILD R.H.FRONT ASSM. NCM
17	72294100	1	SHEILD R.H. CHEM-LOCKER ASSM.
18	72294900	1	SHEILD L.H.FRONT ASSM. NCM

WWW.ROLTRONIK.PL

HARDI	**Agroparts: www.HARDI-INTERNATIONAL.com**	
	FRAME - NCM 4400/6600 E1010-HIN, 01:01:16	Page 0 Date 16.03.2016 13:55

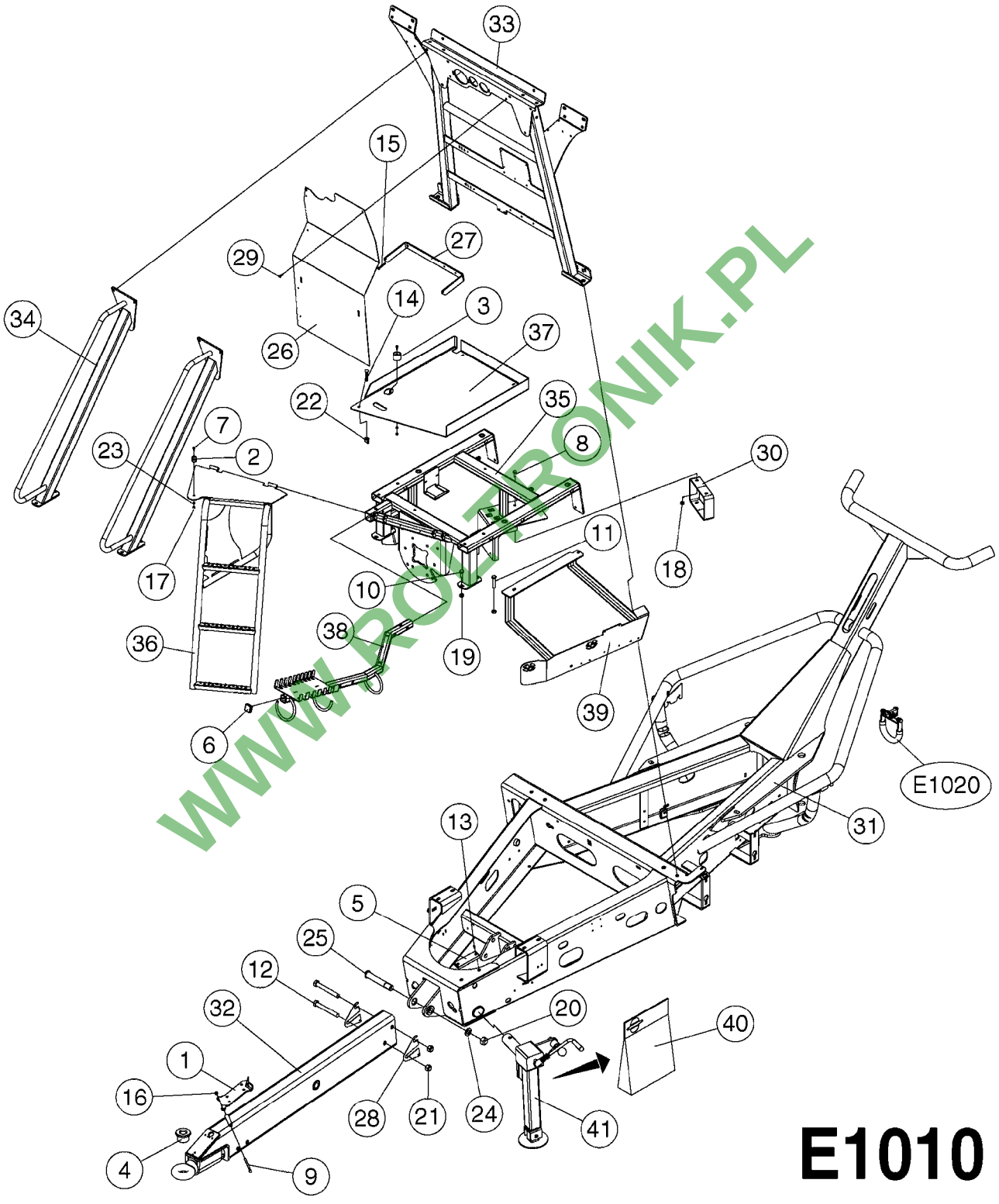

WWW.ROLTRONIK.PL

Pos.	parts-n°	order qty	description
1	161923	1	SUPPORT PLATE F. PTO CM+
2	242567	1	DOOR STOP, MALE
3	242568	1	DOOR STOP, FEMALE
4	14011603	1	BUSHING F. DRAWBAR NCM 1.5"
4	270608	1	BUSHING F. DRAWBAR NCM Ø50/Ø33
5	334135	1	SLIDE SHOE 140X45X15
6	334571	1	TAPON 40x40x2 EMBELLECEDOR
7	410185	1	BOLT HEX 8.8 DEL M6X16 A2
8	421002	1	BOLT HEX 8.8 DEL M10X30 FT DIN933
9	421232	1	BOLT HEX 8.8 DEL M8X110
10	430286	1	BOLT HEX 8.8 DEL M12X30 FT
11	430438	1	BOLT HEX 8.8 DEL M12X65
12	430886	1	BOLT HEX 8.8 DEL M20X160
13	440708	1	SCREW M5.5X16 SELF TAPPING SS
14	440718	1	BOLT CRG M10 X 65 DEL
15	450402	1	BOLT HEX M6X50
16	460143	1	NUT HEX M8 LOCK A2 DIN985
17	460261	1	NUT HEX M6X1 LOCK A2 DIN985
18	460423	1	NUT HEX M10X1.5 LOCK
19	460703	1	NUT HEX M12X1.75 LOCK DIN985
20	460747	1	NUT HEX M24 LOCK
21	460806	1	NUT HEX M20X2.5 LOCK
22	461324	1	NUT WING M10 STAINLESS STEEL
23	471125	1	WASHER, M6, Ø12/ 6.4X 1.6, SS
24	471130	1	WASHER, M24, Ø44/25.0X 4.0, SS
25	14033300	1	PIN D30.0 F. DRAWBAR NCM
26	16128300	1	COVER F. EL-BOX. NCM 4400
26	16156000	1	COVER F. EL-BOX. NCM 6600
27	16128600	1	BRACKET F. COVER PLATE NCM
28	16144700	1	SHIM F. DRAWBAR NCM4400
29	45001500	1	SCREW THUMB PLASTIC HEAD M6x20
30	61018703	1	BRKT, ACE 650, COMMANDER MOUNT BRACKET FOR ACE 650 PUMP
31	63033300	1	FRAME NCM 4400 PAINTED
31	63043300	1	FRAME NCM 6600 PAINTED
32	63033500	1	DRAWBAR SWIVEL D50 NCM 4400
33	63033600	1	TRANSPORT FRAME NCM 4400
33	63043600	1	TRANSPORT FRAME NCM 6600
34	63033700	1	HANDRAIL FOR PLATFORM PAINTED
35	63034100	1	MOUNT PLATFORM NCM 4400
35	63043700	1	MOUNT PLATFORM NCM 6600
36	63035700	1	STEP FOR NCM 4400/6600
37	63035800	1	DECKPLATE F.PLATFORM NCM 4400
37	63043800	1	DECKPLATE F.PLATFORM NCM 6600
38	63038700	1	HOSE & CABLE SUPPORT NCM
39	63040500	1	VALVE CONSOLE PAINTED
40	72280700	1	REPAIR KIT F.JACK STAND
41	72280900	1	JACK STAND F. NCM4400 COMP.

WWW.PCL-TRONIK.PL

SWIVEL HOSE GUARD - NCM
E1020-HIN, 01:01:16

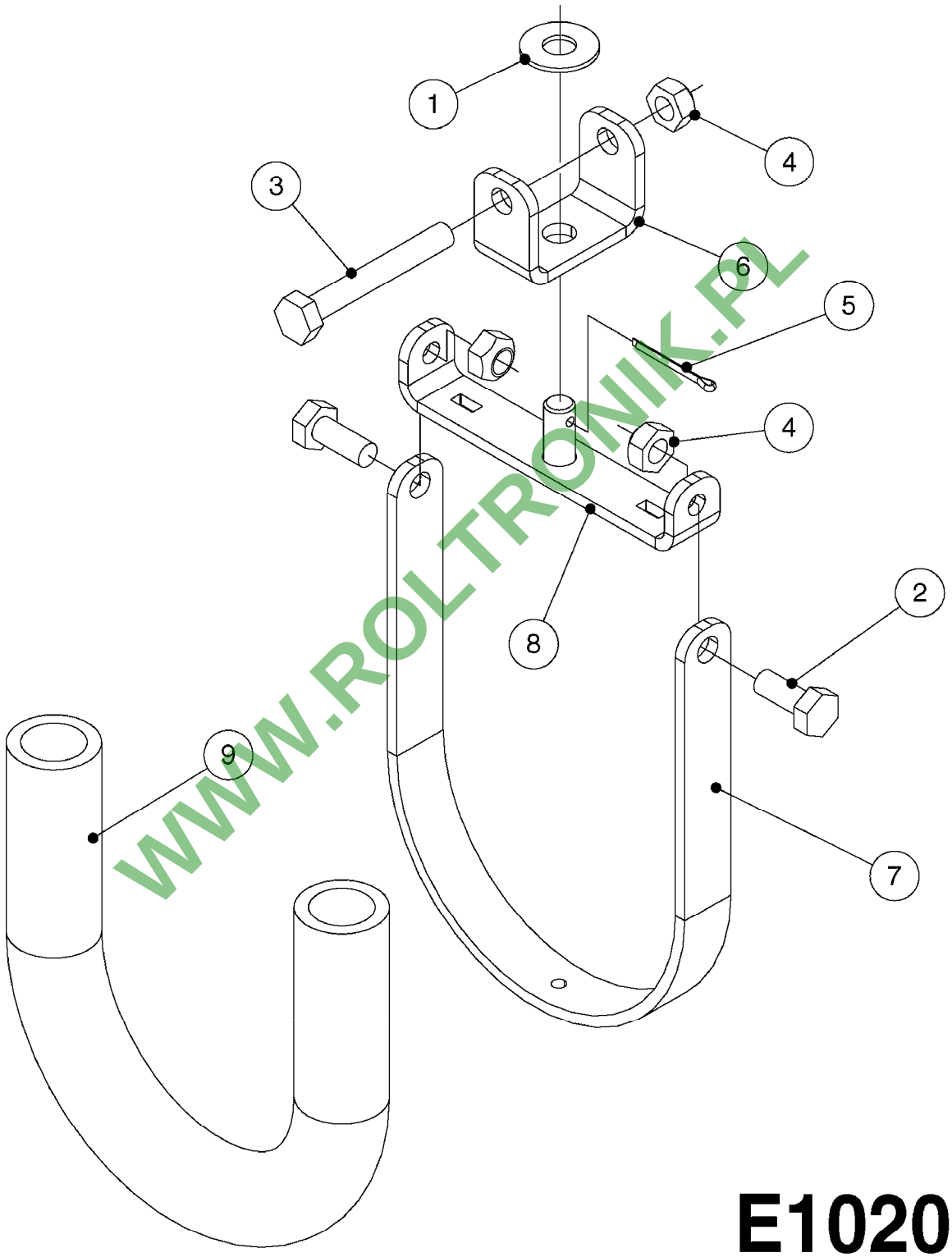

WWW.ROLTRONIK.PL

E1020

SWIVEL HOSE GUARD - NCM
E1020-HIN, 01:01:16

Pos.	parts-n°	order qty	description
1	165557	1	WASHER D28.0/D12.2X2.0 SS
2	420604	1	BOLT HEX 8.8 DEL M10X25 FT DIN933
3	421222	1	BOLT HEX 8.8 DEL M10X75 FT
4	460423	1	NUT HEX M10X1.5 LOCK
5	480126	1	PIN COTTER M4X30
6	16143600	1	HOSE AND CABLE HOLDER TOP
7	16160900	1	HOSE AND CABLE GUARD 160X502MM
7	16187700	1	HOSE AND CABLE GUARD 160X402MM
8	61042200	1	HOSE AND CABLE HOLDER PIVOT
9	92712403	1	HOSE R X1" X300PSI WP X0012"

WWW.ROLTRONIK.PL

HARDI	**Agroparts: www.HARDI-INTERNATIONAL.com**	
	HYD. DRAWBAR - NCM 6600 E1030-HIN, 01:01:16	Page 0 Date 16.03.2016 13:55

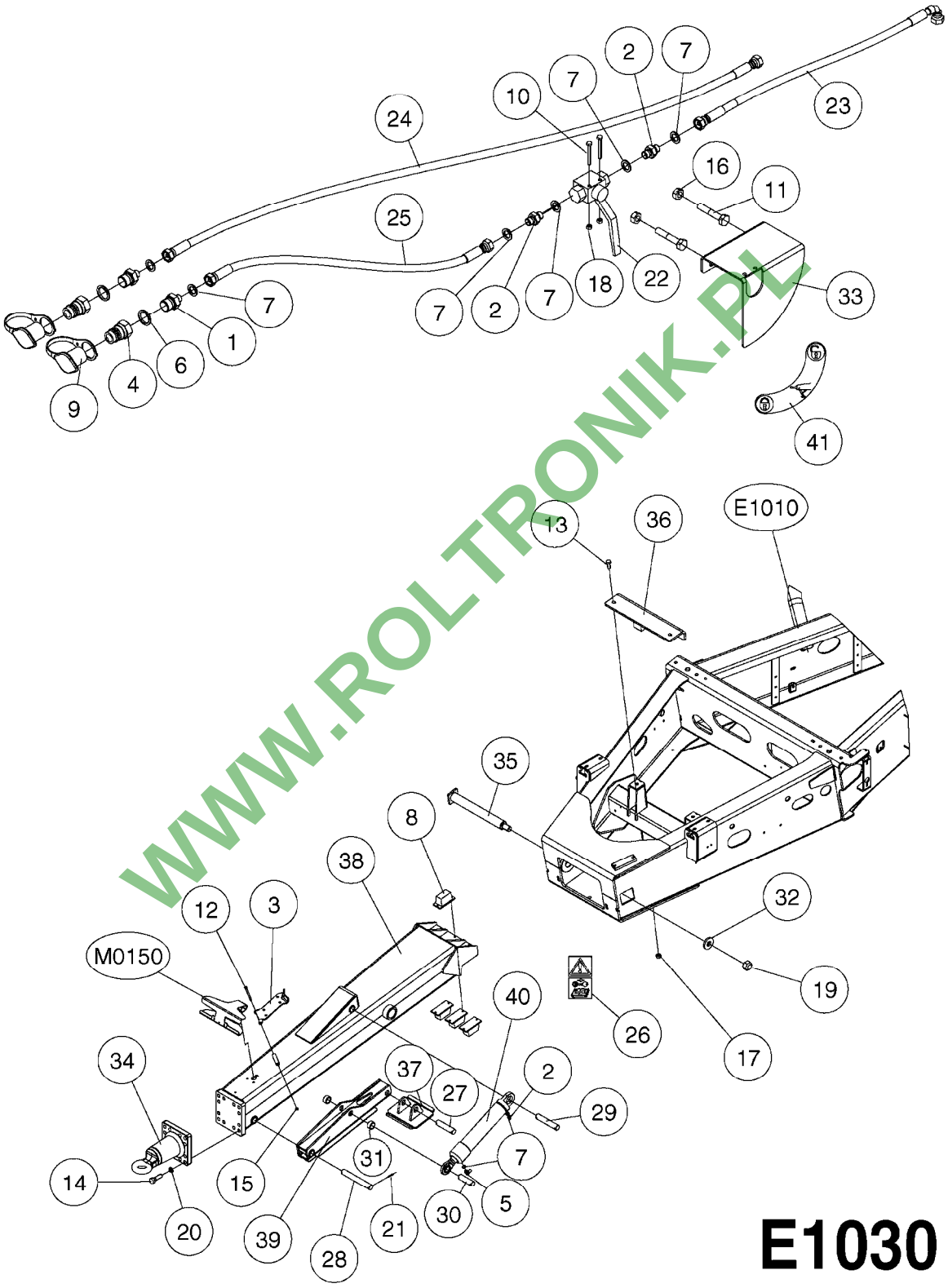

WWW.ROLTRONIK.PL

E1030

HYD. DRAWBAR - NCM 6600
E1030-HIN, 01:01:16

Pos.	parts-n°	order qty	description
1	146846	1	HEX NIPPLE 1/2" X 1/4"
2	146851	1	HEX NIPPLE 1/4"x1/4" 0.7MM
3	161923	1	SUPPORT PLATE F. PTO CM+
4	230311	1	QUICK COUPLING 1/2"
5	232294	1	HYD.FITTING 1/4"X1/4"
6	241356	1	DOWTYSEAL 1/2"
7	241404	1	DOWTY SEAL 1/4"
8	242587	1	RUBBER SUS. ELEMENT 66 DRAWBAR
9	334206	1	DUST HOOD FOR HY-COUPLING
10	421142	1	BOLT HEX 8.8 DEL M5X40
11	421224	1	BOLT HEX 8.8 DEL M10X55
12	421232	1	BOLT HEX 8.8 DEL M8X110
13	430581	1	BOLT HEX 8.8 DEL M16X40 FT
14	430981	1	BOLT HEX M20X65 DIN931-8.8 DEL
15	460143	1	NUT HEX M8 LOCK A2 DIN985
16	460423	1	NUT HEX M10X1.5 LOCK
17	460585	1	NUT HEX M16X2 LOCK
18	461217	1	NUT HEX M5 LOCK
19	461316	1	NUT HEX LOCK M30X3.5
20	471180	1	LOCK WASHER NORDLOCK M20 ELZ
21	480733	1	PIN D6 X 40
22	781049	1	HYD. BALL VALVE
23	784001	1	HOSE HY X 1/4 X 067.00"STR+ELB
24	784143	1	HOSE HY X 1/4 X 138" STR+STR
25	784161	1	HOSE HY X 1/4 X 59" STR+STR
26	978436	1	DECAL - WARNING! SERVICE
27	14047100	1	PIN D30.0 L= 132 /D6.0
28	14047200	1	PIN D30.0 L= 223 /D6.0
29	14047300	1	PIN D30.0 L= 161 /D6.0
30	14047400	1	PIN D30.0 L= 104 /D6.0
31	15073000	1	THREADED PIPE 1-1/4" L=20
32	16155900	1	DISC D70.0/ 31.0X10.0/RED
33	16160000	1	PLATE F. HYD. VALVE CM66/9000
34	28061000	1	SWIVEL HITCH D50/12 BOLT
35	61037800	1	PIN F. STEERING 6600
36	61038500	1	BRACKET FOR DRAWBAR NCM 6600
37	61039700	1	FOOT F. HYD. JACK NCM6600
38	63043900	1	DRAWBAR ADJUSTABLE CM6600
39	63045400	1	SUPPORT LEG HYD. JACK 6600
40	78123300	1	DBL CYL D70/40-320 AIR INLET L
41	97814500	1	DECAL JACK STAND LOCK VALVE

WWW.PO.TRONIK.PL

FRAME - REAR W/PARALIFT NCM
E1040-HIN, 01:01:16

Page 0

Date 16.03.2016 13:55

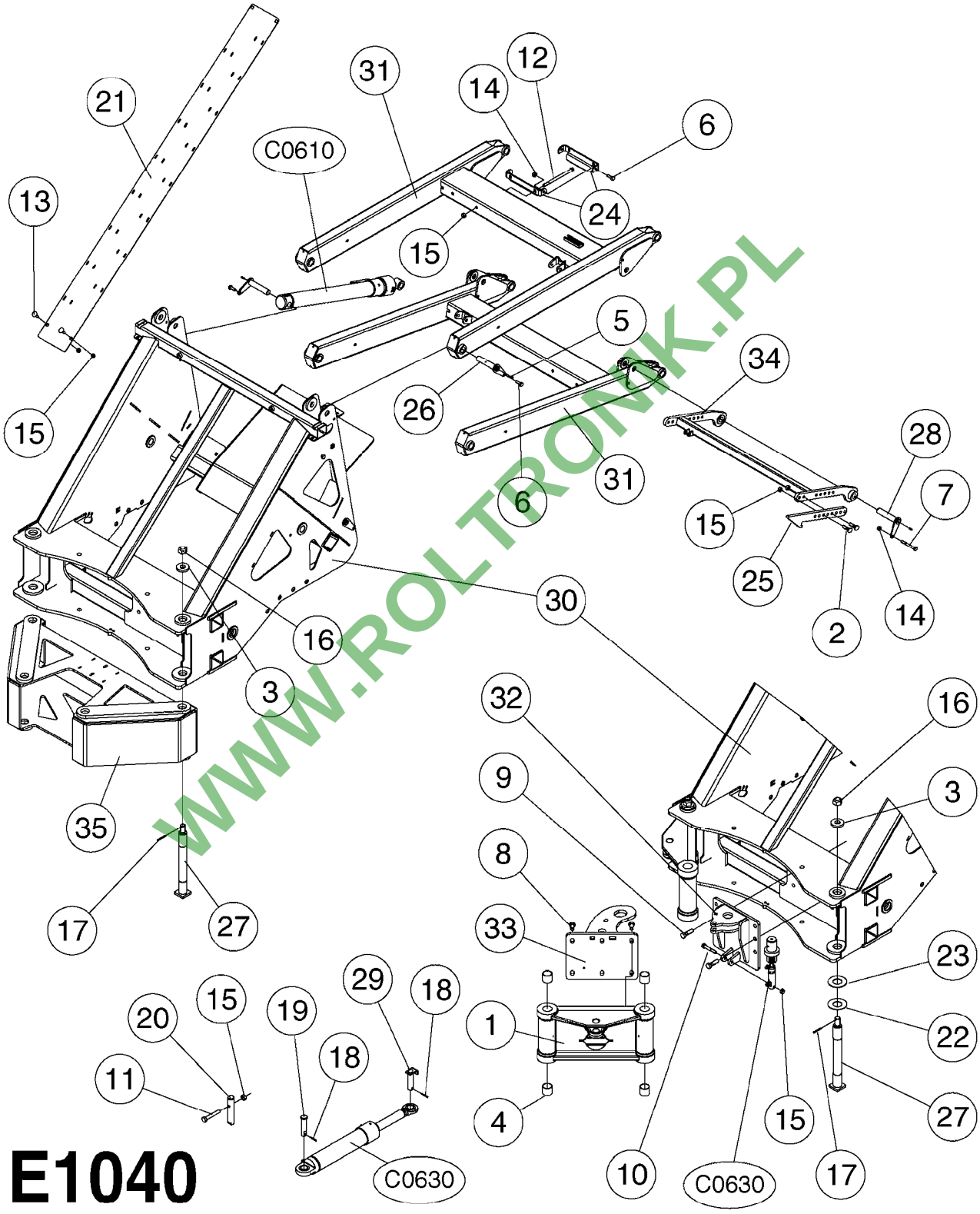

WWW.ROLTRONIK.PL

Pos.	parts-nº	order qty	description
1	111708	1	STEER ARM NCM 4400 PAINTED RED
1	111710	1	STEER ARM NCM 6600 PAINTED RED
2	140225	1	BOLT SPECIAL F.PARALIFT M12x50
3	147454	1	WASHER D60/D25X10 NCM 4400
3	16155900	1	DISC D70.0/ 31.0X10.0/RED NCM 6600
4	210776	1	BUSHING F.TWIN STEERING ARM NCM 6600
4	210865	1	BUSHING 40mm40mm DU NCM 4400
5	283699	1	GREASE NIPPLE M6X1
6	421002	1	BOLT HEX 8.8 DEL M10X30 FT DIN933
7	421218	1	BOLT HEX 8.8 DEL M10X90
8	430684	1	BOLT HEX 8.8 DEL M16X30 FT NCM 4400
8	45001800	1	SCREW ALLEN M20X45 12.9 DE NCM 6600
9	430765	1	BOLT HEX 8.8 DEL M16X55
10	430802	1	BOLT HEX 8.8 DEL M12X75
11	430846	1	BOLT HEX 8.8 DEL M12X80
12	430908	1	BOLT HEX 8.8 DEL M12X200
13	451070	1	CARRIAGE BOLT M12X30
14	460423	1	NUT HEX M10X1.5 LOCK
15	460703	1	NUT HEX M12X1.75 LOCK DIN985
16	460747	1	NUT HEX M24 LOCK NCM 4400
16	461316	1	NUT HEX LOCK M30X3.5 NCM 6600
17	480384	1	PIN COTTER 3/16 x 1-1/2"
18	480502	1	PIN RETAINING M10X50 DIN 1481
19	14033600	1	PIN Ø40/Ø29.8 Ø10 L=133 NCM 4400
20	14051400	1	PIN Ø35.1/Ø12 L=164 NCM 6600
21	16121400	1	SHEET HOSE HOLDER PARALIFT NCM
22	16125200	1	DISC D90/42 X 2 RED NCM 4400
22	16155700	1	DISC D115/52 X 2 RED NCM 6600
23	16125300	1	DISC D90/42 X 3 RED NCM 4400
23	16155800	1	DISC D115/52 X 3 RED NCM 6600
24	16145100	1	SWIVEL FOR HOSE SUPPORT
25	16166200	1	HOOK F.TRANSP STOP W.HOLING
25	16193500	1	HOOK F.PARALIFT LOCK SHORT NCM
26	61030700	1	PIN Ø25 L=117
27	61033700	1	PIN F. STEERING 4400
27	61037800	1	PIN F. STEERING 6600
28	61035700	1	PIN Ø25 L=125
29	61036400	1	PIN D29.8 L=97 NCM 4400
29	61038100	1	PIN D34.8 NCM 6600
30	63033400	1	REAR FRAME NCM 4400 PAINTED
30	63043400	1	REAR FRAME NCM 6600 PAINTED
31	63034200	1	PARALIFT NCM 4400/6600
32	63036100	1	CONSOLE F. TRAPEZE LOCK CM "05

WWW.PO-TRONIK.PL

Pos.	parts-n°	order qty	description
33	63036200	1	LATCH F. TRAPEZE LOCK CM "05" NCM 4400
33	63044000	1	LATCH F. TRAPEZE LOCK CM6600
34	63037000	1	PARALIFT LOCK ARM NCM
35	63037700	1	MOUNT FOR REAR FRAME NCM 4400
35	63046000	1	MOUNT FOR REAR FRAME NCM 6600

WWW.ROLTRONIK.PL

HARDI	**Agroparts: www.HARDI-INTERNATIONAL.com**	
	NCM 4400/6600 NON-SUSPEND.AXLE E1050-HIN, 01:01:16	Page 0 Date 16.03.2016 13:55

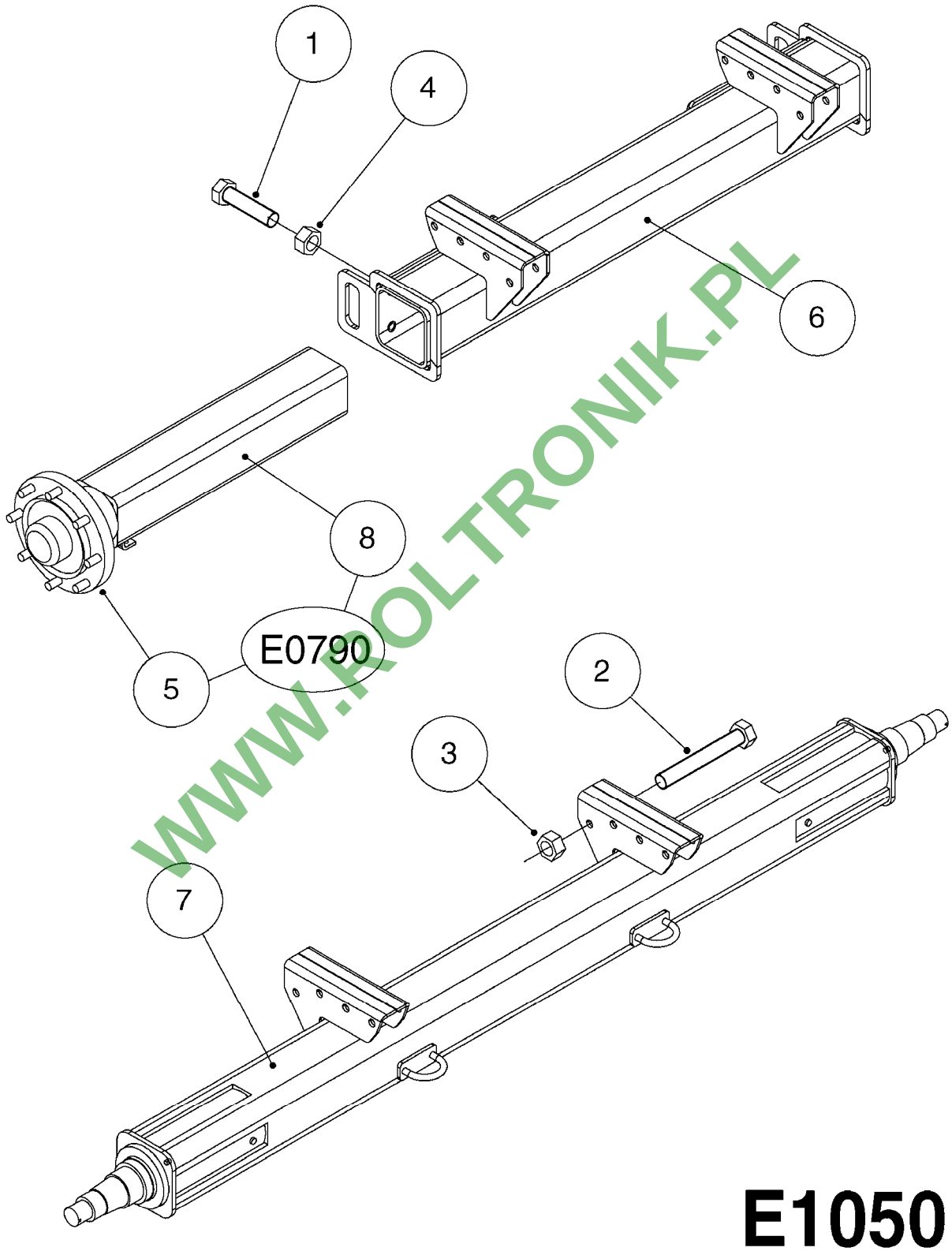

WWW.ROLTRONIK.PL

Pos.	parts-n°	order qty	description
1	430920	1	BOLT HEX M20x80MM
2	430979	1	BOLT HEX M20x140 8.8 DELTA
3	460806	1	NUT HEX M20X2.5 LOCK
4	461228	1	NUT HEX M20
5	28045703	1	HUB ASSY 10-13.19-11.02 25000#
6	63024303	1	AXLE W/M SUSP. FIXED CM"05"
7	63033603	1	AXLE NON-SUSPENDED NCM 44 120"
8	63033703	1	AXLE INSERT NCM 44/66/9000

WWW.ROLTRONIK.PL

HARDI	**Agroparts: www.HARDI-INTERNATIONAL.com**	
	NCM 4400/6600 SUSPENDED AXLE E1060-HIN, 01:01:16	Page 0
		Date 16.03.2016 13:55

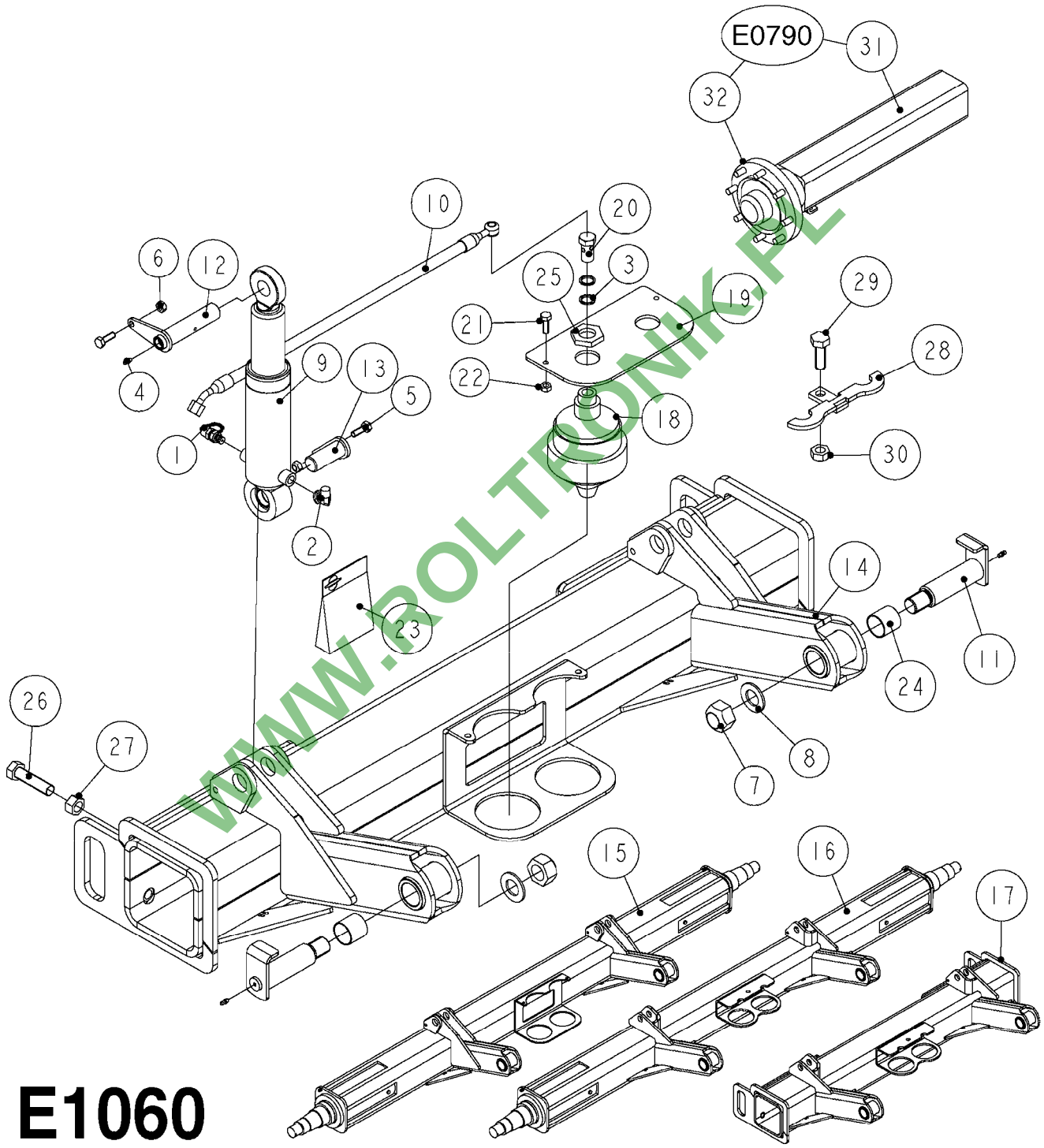

WWW.BOLTRONIK.PL

E1060

Pos.	parts-n°	order qty	description
1	231955	1	NIPPLE F. PRESS GAUGE 1/4" BSP
2	232278	1	NIPPLE 3/8"/90° W. UNION NUT NCM 4400
2	232293	1	ELBOW 90° 1/2"x1/2" NCM 6600
3	241356	1	DOWTYSEAL 1/2"
4	283699	1	GREASE NIPPLE M6X1
5	421002	1	BOLT HEX 8.8 DEL M10X30 FT DIN933 NCM 4400
5	421105	1	M10X45 MACHINE SCREW STAINLESS NCM 6600
6	460423	1	NUT HEX M10X1.5 LOCK
7	461316	1	NUT HEX LOCK M30X3.5
8	471131	1	WASHER, M30, Ø56/31.0X 4.0, SS
9	781136	1	HYDRAULIC SHOCK NCM4400 SUSP. NCM 4400
9	781137	1	HYDRAULIC SHOCK NCM6600 SUSP. NCM 6600
10	28051600	1	HYD. HOSE 3/8" L=745 OML45°/BA NCM 4400
10	28060300	1	HYD. HOSE 1/2" L=710 OML45°/BA NCM 6600
11	61030600	1	PIN THREADED Ø40/L=124 M30-3.0 NCM 4400
11	61037700	1	PIN THREADED Ø40/L=181 M30-3.5 NCM 6600
12	14044000	1	PIN Ø35 L=165 DELTA NCM 6600
12	61030800	1	PIN Ø30/L=127 NCM 4400
13	61031100	1	PIN Ø30/L=81 NCM 4400
13	61037600	1	PIN Ø34.8/L=94 NCM 6600
14	63027003	1	AXLE W/M SUSP. ADJ. NCM6600 NCM 6600
15	63026903	1	AXLE W/M SUSP. FIXED NCM6600 NCM 6600
16	63024403	1	AXLE W/M SUSP. FIXED CM"05" NCM 4400
17	63024203	1	AXLE W/M SUSP. ADJ. CM"05" NCM 4400
18	28023900	1	ACCUMULATOR 0.75L/70 BAR CM"05 NCM 4400
18	28059400	1	ACCUMULATOR NCM6600 SUSPENSION NCM 6600
19	16155600	1	ACCUMULATOR MT. PLATE 6600 NCM 6600
20	232291	1	BANJO BOLT 1/2" BSP
21	421046	1	BOLT HEX 8.8 DEL M8X25 FT A2 DIN933 NCM 6600
22	460143	1	NUT HEX M8 LOCK A2 DIN985 NCM 6600
23	28064100	1	GASKET SET FOR CYL. 781136 NCM 4400
23	28064200	1	GASKET SET FOR CYL. 781137 NCM 6600
24	210863	1	BUSHING DU FLNG. D40/44 L=26 NCM 4400
24	210865	1	BUSHING 40mm40mm DU NCM 6600

WWW.RO-TRONIK.PL

Pos.	parts-n°	order qty	description
25	14022800	1	NUT M33-1.5/NV=55/L=8
26	430920	1	BOLT HEX M20x80MM
27	461228	1	NUT HEX M20
28	61011703	1	ACCUMULATOR MT. BKT. NCM 4400 NCM 4400
29	430581	1	BOLT HEX 8.8 DEL M16X40 FT NCM 4400
30	460585	1	NUT HEX M16X2 LOCK NCM 4400
31	63023703	1	AXLE W/M CM44/66/9 W/SPIN.ADJ. NCM 4400
32	28045703	1	HUB ASSY 10-13.19-11.02 25000#

WWW.ROLTRONIK.PL

WHEELS FOR NEW COMMANDER
E1070-HIN, 01:01:16

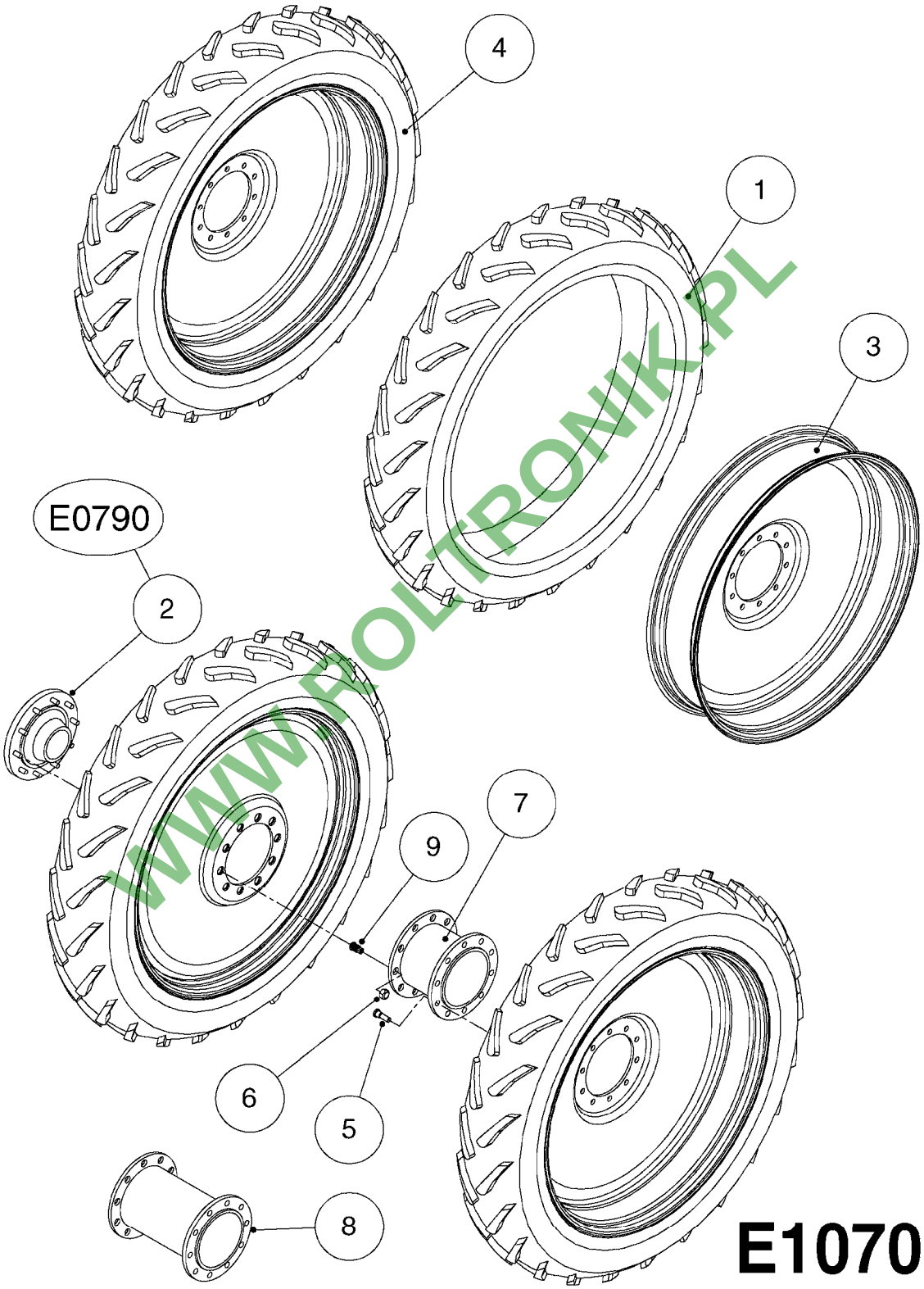

WWW.ROLTRONIK.PL

WHEELS FOR NEW COMMANDER
E1070-HIN, 01:01:16

Pos.	parts-n°	order qty	description
1	10615703	1	TIRE 320 90R46' RAD.TL 357774
2	28045703	1	HUB ASSY 10-13.19-11.02 25000#
3	28007103	1	RIM,10x46,5.75NOS,13.189BC
4	28031203	1	TIRE ASSY. 320/90R50" HL R.H.
4	28031303	1	TIRE ASSY. 320/90R50" HL L.H.
4	28037603	1	TIRE ASSY.320/90R50" R.H. DUAL
4	28037703	1	TIRE ASSY.320/90R50" L.H. DUAL
4	28038603	1	TIRE 320/90R50" 161A8B HI LOAD
4	70006303	1	WHEEL ASM. 320/90R46 LH
4	70006703	1	WHEEL ASM. 320/90R46 RH
5	28034803	1	STUD 3/4"NF/5/8"KNURL L=2-5/8"
6	46000303	1	NUT, BUD WHEEL, OUTER, RH
7	61011203	1	DUAL SPACER 22" ROW 50" TIRE
8	61011303	1	DUAL SPACER 30" ROW 50" TIRE
9	46000203	1	NUT, BUD WHEEL, INNER, RH

WWW.ROLTRONIK.PL

HARDI	**Agroparts: www.HARDI-INTERNATIONAL.com**	
	CHEMICAL FILLER-HOPPER NCM K0110-HIN, 01:01:16	Page 0 Date 16.03.2016 13:55

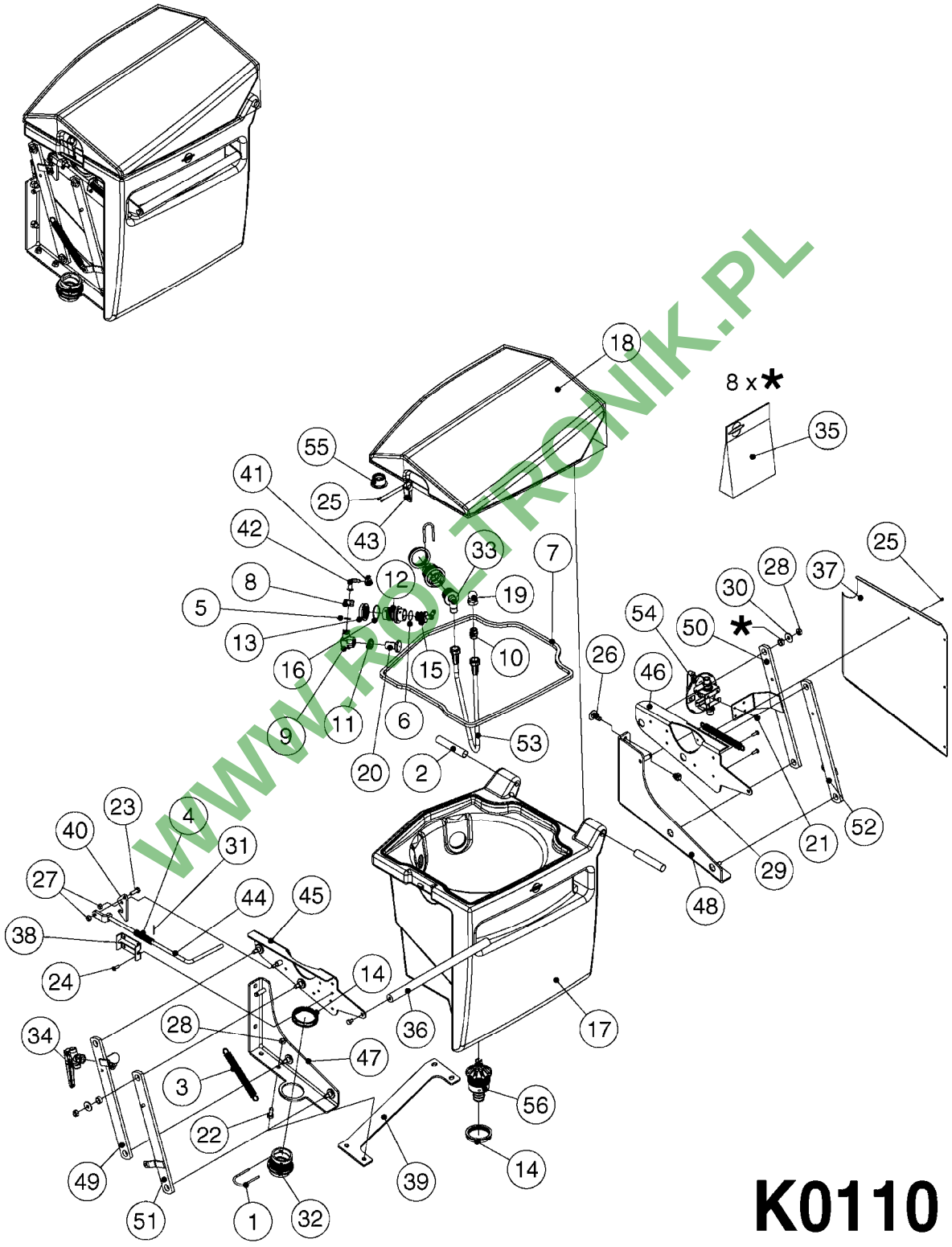

WWW.ROL-TRONIK.PL

Pos.	parts-n°	order qty	description
1	145996	1	FITT.DK S-67 FORK
2	151162	1	PIN F. LID HINGE CHEM-FILLER
3	220949	1	SPRING Ø20.0/3.0 L=240 BLACK
4	220951	1	SPRING D15/1.5 L=90 20V
5	242222	1	GASKET 19.0 X 10.0 X 3.3 EPDM
6	242355	1	O-RING D19.2X3.0 VITON F.S-40
7	242563	1	NEOPRENE SEAL 10X10
8	320084	1	FITT.DK NUT 1/2" BSP
9	320563	1	FITT.DK 3 WAY 1/2" 110 DEG.
10	320655	1	FITT.DK HN 1/2"-1/2" BSP
11	321307	1	FITT.DK NUT 1/2" BSP JAMB
12	322102	1	FITT.DK S-40 BULKHEAD
13	322106	1	FITT.DK S-40 BULKHEAD NUT
14	322108	1	FITT.DK S-67 BULKHEAD NUT
15	334237	1	FITT.DK S-40 ELB.3/8'
16	334259	1	GASKET F. S-40 BULKHEAD
17	351769	1	HOPPER FOR CHEMFILLER
18	351770	1	LID F. TURBO FILL NCM
19	371552	1	NOZZLE F.RINSING
20	372044	1	NOZZLE FOR CHEMFILLER
21	410185	1	BOLT HEX 8.8 DEL M6X16 A2
22	420604	1	BOLT HEX 8.8 DEL M10X25 FT DIN933
23	421046	1	BOLT HEX 8.8 DEL M8X25 FT A2 DIN933
24	440392	1	SCREW 6.3 X 25.0 DIN7981C TORX
25	440632	1	SCREW M4X13
26	451070	1	CARRIAGE BOLT M12X30
27	460143	1	NUT HEX M8 LOCK A2 DIN985
28	460423	1	NUT HEX M10X1.5 LOCK
29	460703	1	NUT HEX M12X1.75 LOCK DIN985
30	471140	1	WASHER D30/D10.5X2.5 STAINLESS
31	480798	1	ROLL PIN D3X30 DIN1481 RST
32	726464	1	FITT.DK S-67 BULKHEAD W/GASKET
33	726552	1	FIT.DK S-53X90 1/2" BSP,O-RING
34	727543	1	VALVE F.CHEM FILL JUG RINSE
35	741830	1	BUSHINGS F.PARALLELARMS
36	14036900	1	HAND GRIP FOR CHEMFILLER
37	16137400	1	PLATE BACK F. CHEM-FILL NCM
38	16137700	1	GUIDE BRACKET F.CHEMFILL LOCK
39	16138100	1	SUPPORT FOR CONSOLE
40	16149500	1	HOOK LATCH F.CHEMFILL'05
41	28029803	1	CLAMP HOSE GEAR P1/2" 6708
42	28054500	1	ANGLE HOSE BARB 90 1/2 10MM
43	28055800	1	LOCK (SNAP CLIP) SS
44	61038200	1	HANDLE F.CHEMFILL LOCK '05
45	63035000	1	MOUNT.BRACKET F.CHEMFILL RIGHT
46	63035100	1	MOUNT.BRACKET F.CHEMFILL LEFT
47	63035200	1	MT.BRACKET F.PARALLELARM LEFT
48	63035300	1	MT.BRACKET F.PARALLELARM RIGHT
49	63040700	1	INNER ARM F.CHEMFILL LEFT
50	63040800	1	INNER ARM F.CHEMFILL RIGHT
51	63040900	1	OUTER ARM F.CHEMFILL LEFT
52	63041000	1	OUTER ARM F.CHEMFILL RIGHT
53	63041300	1	RINSE PIPE F. CHEM-FILLER
54	72246800	1	VALVE 1/2" 2 POSITION
55	72339500	1	AIR VALVE F.CHEMFILLER
56	72726900	1	CHECK VALVE F.CHEMFILLER

WWW.PO-TRONIK.PL

HARDI	**Agroparts: www.HARDI-INTERNATIONAL.com**	
	DRAIN ASSEMBLY-PULL CORD TYPE K0180-HIN, 01:01:16	Page 0 Date 16.03.2016 13:55

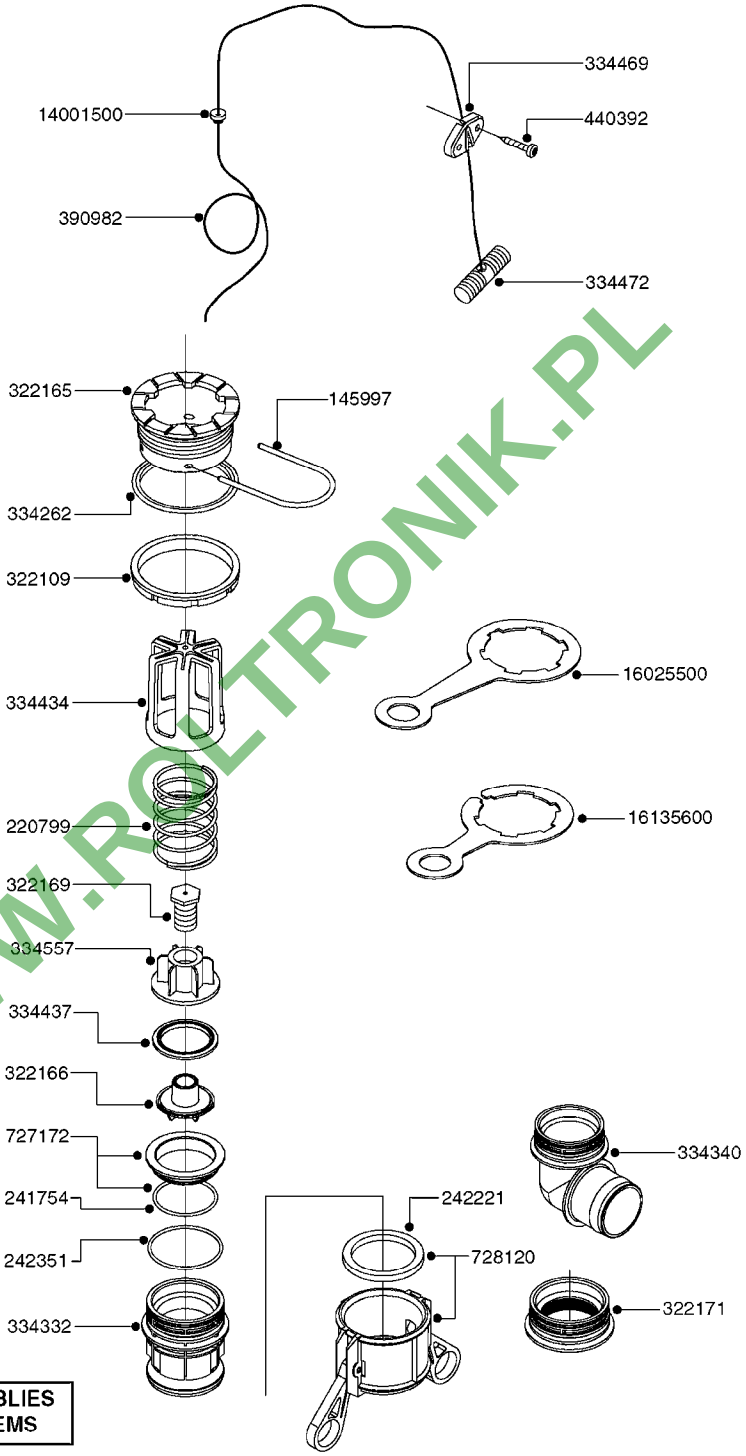

WWW.ROLTRONIK.PL

COMPLETE ASSEMBLIES
WHOLEGOODS ITEMS

727617 - COMPLETE ASSEMBLY (2" BSP THREADED FITTING & 126" CORD)
727742 - COMPLETE ASSEMBLY (2-1/2" ELBOW & 157.5" CORD)

K0180

DRAIN ASSEMBLY-PULL CORD TYPE
K0180-HIN, 01:01:16

parts-n°	order qty	description
145997	1	FITT.DK S-93 FORK
220799	1	SPRING F.TOP DRAIN
241754	1	O-RING D59.5X3
242221	1	GASKET F. S-93 QUICK COUPLERS
242351	1	O-RING D69.5X3.0 VITON F.S-93
322109	1	FITT.DK S-93 BULKHEAD NUT
322165	1	FITT.DK S-93 BULKHEAD SINGLE
322166	1	VALVE FLAP LOWER PART
322169	1	CORD PLUG F.TOP DRAIN
322171	1	FITT.DK S-93 THREAD INS.2"BSP
334262	1	GASKET F.S-93 BULKHEAD
334332	1	FITT.DK S-93 MALE QUICK COUP.
334340	1	FITT.DK S-93 ELBOW 2.5"
334434	1	CAGE F.SPRING BOTTOM DRAIN ASY
334437	1	SEAL FOR VALVE FLAP
334469	1	CLEVIS F.CORD TOP DRAIN ASSY.
334472	1	HANDLE FOR TOP DRAIN
334557	1	SPRING SEAT TOP DRAIN
390982	1	CORD NYLON 4000MM
440392	1	SCREW 6.3 X 25.0 DIN7981C TORX
727172	1	FITT.DK S-93 SEAT INSERT
727617	1	FITT.DK S-93 BOTTOM VALVE 2'
727742	1	TOP DRAIN CORD TYPE
728120	1	QUICK COUPLER CAP F.S93 DRAIN
14001500	1	GROMMET F.TOP DRAIN CORD
16025500	1	TANK SPACER SIGHT GAUGE
16135600	1	GUIDE FOR SIGHT GAUGE NAV/NCM

WWW.ROLTRONIK.PL

HARDI	**Agroparts: www.HARDI-INTERNATIONAL.com**	
	END NOZZLE KIT K0230-HIN, 01:01:16	Page 0 Date 16.03.2016 13:55

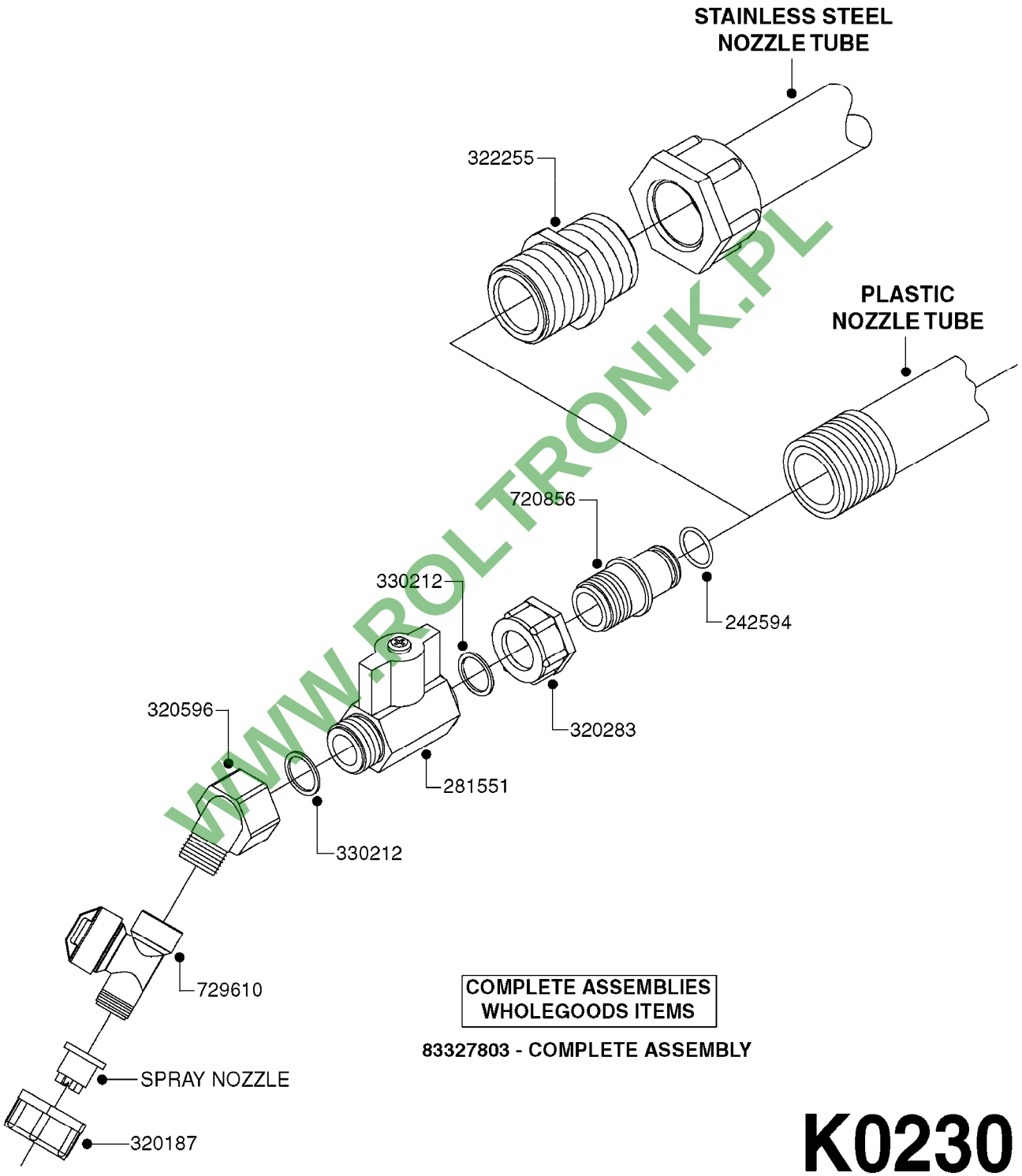

WWW.ROLTRONIK.PL

COMPLETE ASSEMBLIES
WHOLEGOODS ITEMS

83327803 - COMPLETE ASSEMBLY

K0230

END NOZZLE KIT
K0230-HIN, 01:01:16

Date 16.03.2016 13:55

parts-n°	order qty	description
242594	1	O-RING D14 X 1.78 SCH.70-EPDM
281551	1	BALL VALVE 1/2"
320187	1	FITT.DK CAP 3/8" BSP BLACK
320283	1	FITT.DK NUT 3/4"BSP
320596	1	FITT.DK ELB 3/8'-1/2'BSP 45DEG
322255	1	FITT.DK NIPPLE 3/4"X 3/4"
330212	1	O-RING D19/D14X2.4 F.1/2"NUT
720856	1	FITT.DK 1/2'BSP ASSY.F.3/4'NUT
729610	1	NOZZLE ASSY. NON DRIP 3/8 THRD
83327803	1	END NOZZLE KIT "04"

WWW.ROLTRONIK.PL

HARDI	**Agroparts: www.HARDI-INTERNATIONAL.com**	
	ELECTRIC END NOZZLE KIT '09 K0250-HIN, 01:01:16	Page 0
		Date 16.03.2016 13:55

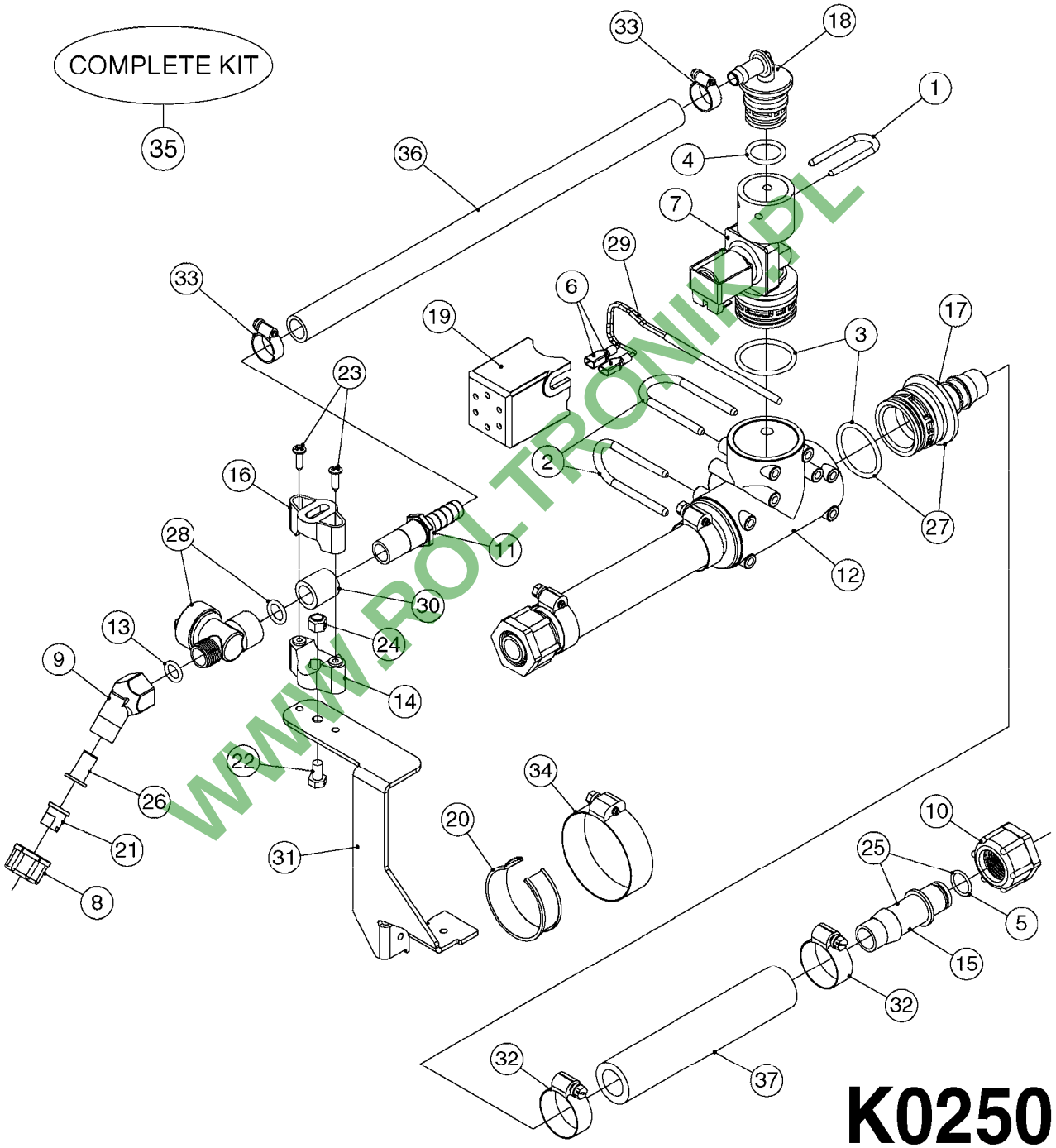

WWW.ROLTRONIK.PL

K0250

ELECTRIC END NOZZLE KIT '09
K0250-HIN, 01:01:16

Date 16.03.2016 13:55

Pos.	parts-nº	order qty	description
1	145994	1	FITT.DK S-40 FORK
2	145995	1	FITT.DK S-53 FORK
3	242354	1	O-RING D32.2X3.0 VITON F.S-53
4	242355	1	O-RING D19.2X3.0 VITON F.S-40
5	242594	1	O-RING D14 X 1.78 SCH.70-EPDM
6	261539	1	SPADE F.ELEC CONNEC BLUE INSUL
7	262104	1	VALVE, SOLENOID, S53/S40
8	320187	1	FITT.DK CAP 3/8" BSP BLACK
9	320191	1	FITT.DK ELB 3/8' BSP 45 DEGREE
10	320283	1	FITT.DK NUT 3/4"BSP
11	320891	1	FITT.DK HB 3/8'- 3/8' BSP
12	322352	1	FITT.DK S-53 TEE
13	330013	1	O-RING D15/D10X2.5 F.3/8"NUT
14	333012	1	NOZZLE HOLD. UPPER PART
15	334044	1	FITT.DK HB 3/4' F. 3/4' CAP
16	334220	1	YOKE, UPPER NOZZLE BODY
17	334229	1	FITT.DK S-53 STR.3/4"
18	334237	1	FITT.DK S-40 ELB.3/8'
19	334965	1	COVER FOR S53 SOLENOID VALVE
20	341291	1	RUBBER HOSE CLAMP COVER 130MM
21	370392	1	NOZZLE END FAN 1850-G 300
22	410546	1	BOLT HEX SS M6X12 FT
23	440665	1	SCREW M4.2X16 STAINLESS
24	460261	1	NUT HEX M6X1 LOCK A2 DIN985
25	724621	1	FITT.DK HB 3/4"ASSY F.3/4" NUT
26	725042	1	SCREEN 80 MESH W.GASKET, RED
27	726558	1	FITT.DK S53 STR. 3/4" W.ORING
28	729610	1	NOZZLE ASSY. NON DRIP 3/8 THRD
29	983087	1	ELEC. CABLE 2 WIRE X 0.75MM
30	10631003	1	HOSE R X CLEAR BRAID.X 1/2 12"
31	16110803	1	NOZZLE BRACKET VAR SPACINGS
32	28029903	1	CLAMP HOSE GEAR P3/4"-S1" 6712
33	28044903	1	CLAMP HOSE GEAR P3/8" 6706
34	28047003	1	CLAMP HOSE GEAR 30 X 50 6732
35	82613203	1	ELECTRIC END NOZZLE KIT 2009
36	92701703	1	HOSE R X3/8" X300PSI WP X0012"
37	92703203	1	HOSE R X3/4" X300PSI WP X0012"

WWW.PODTROJNIK.PL

HARDI	**Agroparts: www.HARDI-INTERNATIONAL.com**	
	ELECTRIC END NOZZLE KIT '12 K0260-HIN, 01:01:16	Page 0 Date 16.03.2016 13:55

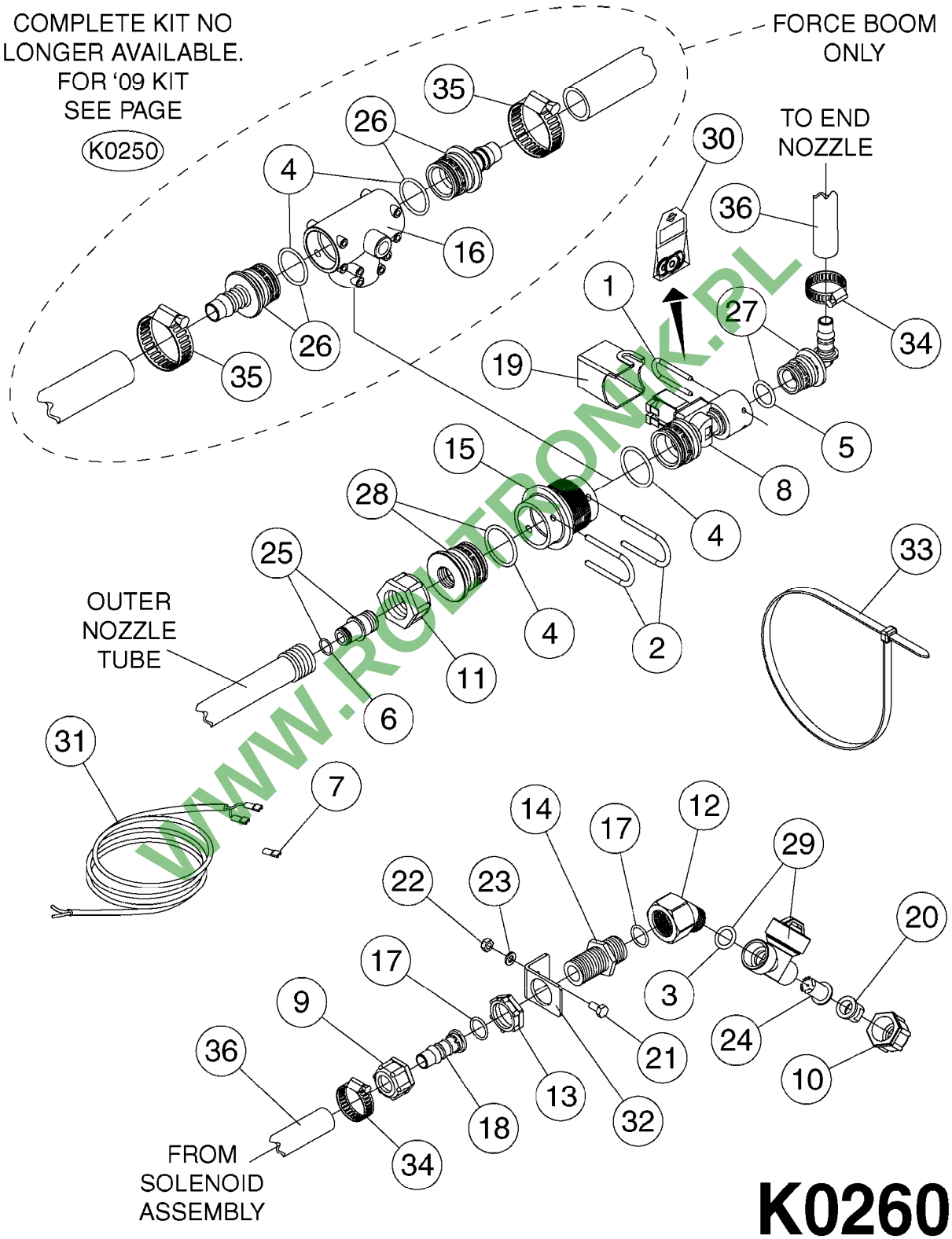

WWW.ROLTRONIK.PL

ELECTRIC END NOZZLE KIT '12
K0260-HIN, 01:01:16

Pos.	parts-nº	order qty	description
1	145994	1	FITT.DK S-40 FORK
2	145995	1	FITT.DK S-53 FORK
3	240177	1	O-RING D16.1/11.3 X 2.4
4	242354	1	O-RING D32.2X3.0 VITON F.S-53
5	242355	1	O-RING D19.2X3.0 VITON F.S-40
6	242594	1	O-RING D14 X 1.78 SCH.70-EPDM
7	261539	1	SPADE F.ELEC CONNEC BLUE INSUL
8	262104	1	VALVE, SOLENOID, S53/S40
9	320084	1	FITT.DK NUT 1/2" BSP
10	320187	1	FITT.DK CAP 3/8" BSP BLACK
11	320283	1	FITT.DK NUT 3/4"BSP
12	320596	1	FITT.DK ELB 3/8'-1/2'BSP 45DEG
13	321307	1	FITT.DK NUT 1/2" BSP JAMB
14	321742	1	FITT.DK BULKHEAD 1/2' BSP
15	322103	1	FITT.DK S-53 BULKHEAD
16	322352	1	FITT.DK S-53 TEE
17	330212	1	O-RING D19/D14X2.4 F.1/2"NUT
18	330687	1	FITT.DK HB 1/2" F. 1/2" NUT
19	334965	1	COVER FOR S53 SOLENOID VALVE
20	370366	1	NOZZLE END FAN 1850-G 150
21	410185	1	BOLT HEX 8.8 DEL M6X16 A2
22	460261	1	NUT HEX M6X1 LOCK A2 DIN985
23	471125	1	WASHER, M6, Ø12/ 6.4X 1.6, SS
24	614366	1	FILTER 50 MESH F.NOZZLE BLUE
24	614367	1	FILTER 80 MESH F.NOZZLE RED
24	614368	1	FILTER 100 MESH F.NOZZLE YEL.
25	720856	1	FITT.DK 1/2'BSP ASSY.F.3/4'NUT
26	726558	1	FITT.DK S53 STR. 3/4" W.ORING
27	726567	1	FITT.DK S-40 ELB.1/2" W.ORING
28	726694	1	PLUG,S53,1/2"FBSP THD W.ORING
29	729610	1	NOZZLE ASSY. NON DRIP 3/8 THRD
30	750722	1	REPAIR KIT FOR 3S SC CONTROL
31	983087	1	ELEC. CABLE 2 WIRE X 0.75MM
32	16180100	1	PLATE, END ROW NOZZLE
33	28025203	1	TIE STRAP L=23" x W=1/2"
34	28029803	1	CLAMP HOSE GEAR P1/2" 6708
35	28029903	1	CLAMP HOSE GEAR P3/4"-S1" 6712
36	92702103	1	HOSE R X1/2" X300PSI WP X0012"

WWW.PO-TRON.PL

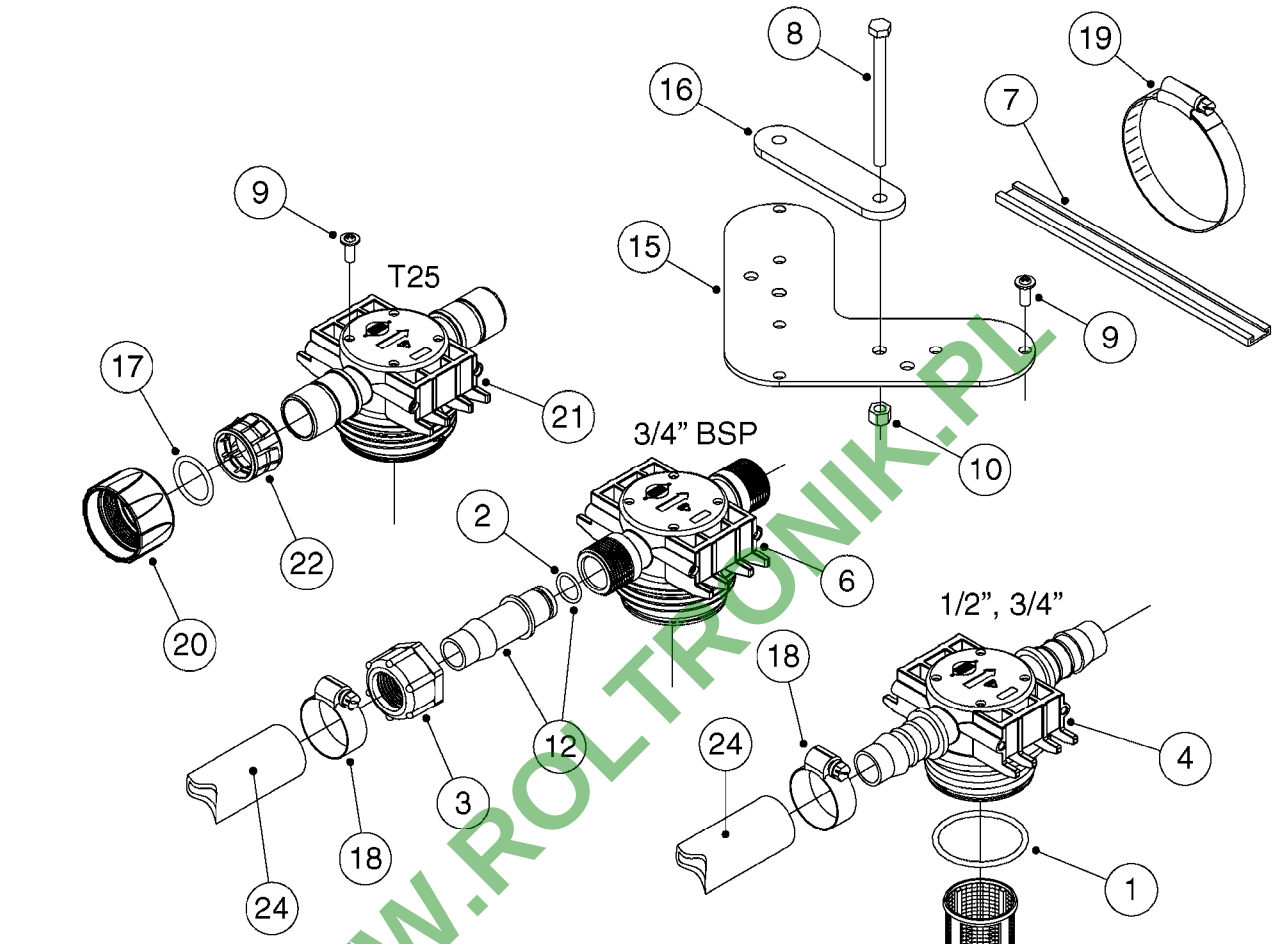

COMPLETE ASSEMBLIES

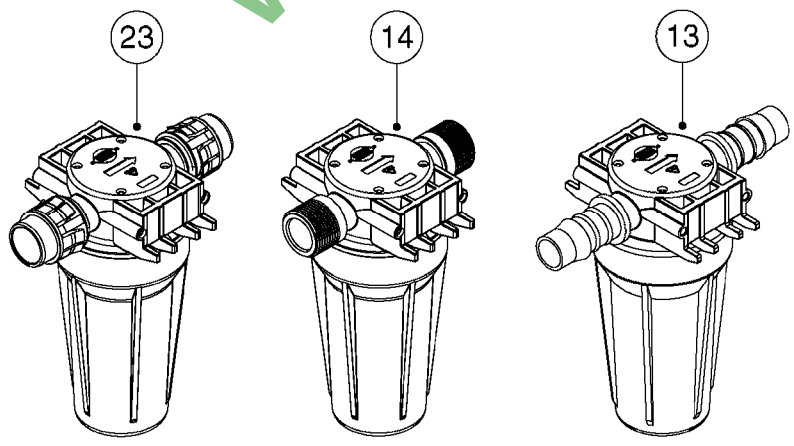

K0270

WWW.ROLTRONIK.PL

FILTER ASSEMBLIES-IN LINE
K0270-HIN, 01:01:16

Date 16.03.2016 13:55

Pos.	parts-n°	order qty	description
1	240925	1	O-RING D49.5X3 NITRIL
2	242594	1	O-RING D14 X 1.78 SCH.70-EPDM
3	320283	1	FITT.DK NUT 3/4"BSP
4	322241	1	FILTER HOUSING W.3/4' BARBS
4	322249	1	FILTER HOUSING W.1/2' BARBS
5	322242	1	FILTER BOWL / IN-LINE
6	322250	1	FILTER HOUSING W.3/4"BSP THRD
7	341291	1	RUBBER HOSE CLAMP COVER 130MM
7	341292	1	RUBBER HOSE CLAMP COVER 180MM
8	410605	1	BOLT HEX 8.8 DEL M6X80
9	440673	1	SCREW F.PLASTIC 5X12 SS
10	460261	1	NUT HEX M6X1 LOCK A2 DIN985
11	615443	1	FILTER ELEM.50 MESH BLUE
11	615444	1	FILTER ELEM.80 MESH RED
11	615445	1	FILTER ELEM.100 MESH YELLOW
12	716236	1	FITT.DK HB 1/2" ASSY. F. 3/4"
12	724621	1	FITT.DK HB 3/4"ASSY F.3/4" NUT
13	845205	1	FILTER IN-LINE 1/2' 50 MESH
13	845208	1	FILTER IN-LINE 3/4' 50 MESH
13	845209	1	FILTER IN-LINE 3/4' 80 MESH
14	845218	1	FILTER IN-LINE 3/4'50 MESH OML
14	845219	1	FILTER IN-LINE 3/4'80 MESH OML
15	16022203	1	PLATE 3.0 X 55 X 196
16	16022403	1	BRACKET 60MM TUBE
17	24263000	1	O-RING Ø24.4 X 3.1 NITRIL SH70
18	28029903	1	CLAMP HOSE GEAR P3/4"-S1" 6712
19	28047103	1	CLAMP HOSE GEAR 50 X 50 6740
19	28047203	1	CLAMP HOSE GEAR 60 X 80 6756
20	32239700	1	FITT.DK NUT T25
21	32239800	1	FITT.DK IN-LINE FILTER TOP T25
22	33515500	1	FITT.DK NUT LOCK RING T25
23	72700600	1	FILTER IN-LINE 80 MESH, T25
24	92702103	1	HOSE R X1/2" X300PSI WP X0012"
24	92703203	1	HOSE R X3/4" X300PSI WP X0012"

WWW.PCTRONIK.PL

HARDI	**Agroparts: www.HARDI-INTERNATIONAL.com**	
	FLUSH SYSTEM - NCM/NAVIGATOR K0370-HIN, 01:01:16	Page 0 Date 16.03.2016 13:55

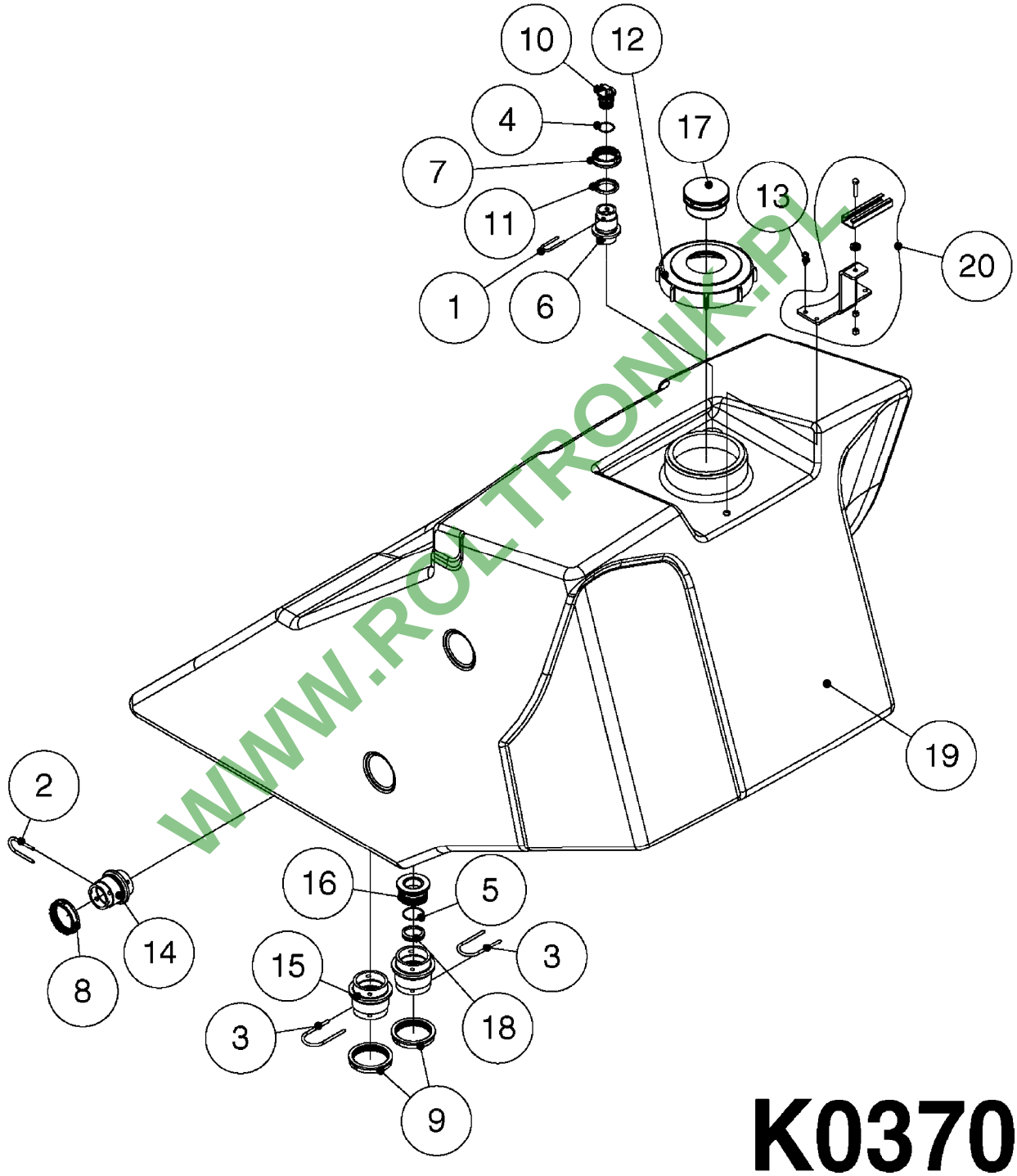

WWW.ROL-TRONIK.PL

K0370

FLUSH SYSTEM - NCM/NAVIGATOR
K0370-HIN, 01:01:16

Pos.	parts-n°	order qty	description
1	145994	1	FITT.DK S-40 FORK
2	145995	1	FITT.DK S-53 FORK
3	145996	1	FITT.DK S-67 FORK
4	242355	1	O-RING D19.2X3.0 VITON F.S-40
5	242504	1	O-RING D35x2 NITRIL
6	322102	1	FITT.DK S-40 BULKHEAD
7	322106	1	FITT.DK S-40 BULKHEAD NUT
8	322107	1	FITT.DK S-53 BULKHEAD NUT
9	322108	1	FITT.DK S-67 BULKHEAD NUT
10	334248	1	FITT.DK S-40 PLUG
11	334259	1	GASKET F. S-40 BULKHEAD
12	390847	1	LID F. RINSE TANK CM
13	440392	1	SCREW 6.3 X 25.0 DIN7981C TORX
14	726463	1	FITT.DK S53 BULKHEAD W/GASKET
15	726464	1	FITT.DK S-67 BULKHEAD W/GASKET
16	726695	1	FITT.DK S-67 X 1'BSP W.ORING
17	727038	1	VENT F.TANK (FAST FILL)
18	14014400	1	SEAT F.CHECK VALVE D41.8 S67
19	72285500	1	RINSE TANK W/FITTINGS NCM/NAV
20	72348600	1	HOSE MT. BKT NCM FLUSH TANK

WWW.ROLTRONIK.PL

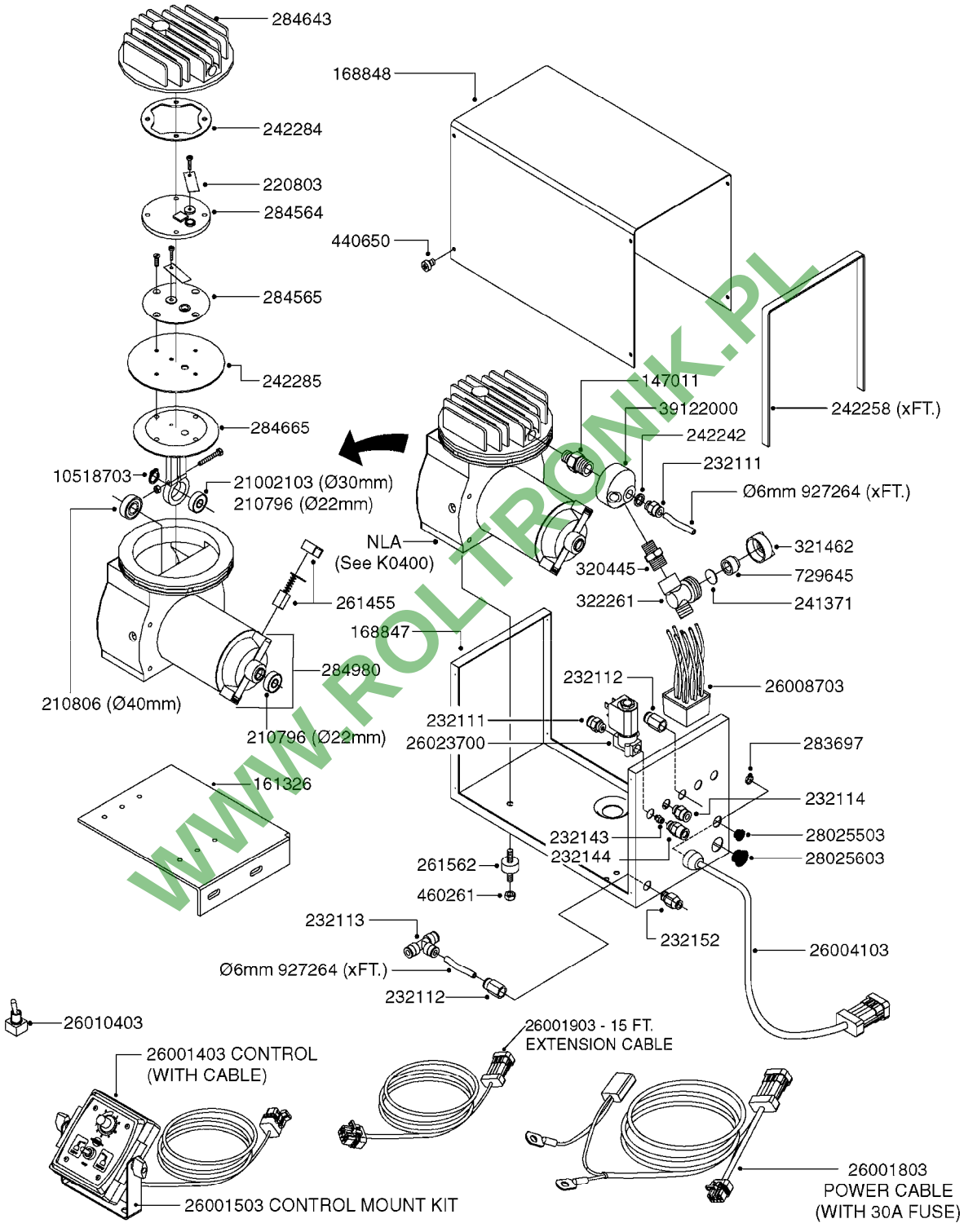

K0390

*Ø8mm 927306 (xFT.)
*Ø10mm 927330 (xFT.)

70019403 - COMPLETE ASSEMBLY

WWW.ROLTRONIK.PL

parts-nº	order qty	description
147011	1	HEX NIPPLE 3/8'X1/4'BSP BRASS
161326	1	MOUNT BKT. F. FOAM COMP.BOX 98
168847	1	ENCLOSURE LOWER F.MARKER
168848	1	COVER F. FOAM MARKER
210796	1	BEARING BALL D22/D8 X 7 608ZZ
210806	1	BEARING BALL D40/D17X12MM
220803	1	VALVE F. COMPRESSOR
232111	1	QUICK COUPLER 6MM X 1/8 EXT.
232112	1	QUICK COUPLER 6MM 1/8 INT.
232113	1	QUICK COUPLER 6MM T-PIECE
232114	1	COUPLER 1/8" THREADX8MM HOSE
232143	1	REDUCER 1/4'INT-1/8'EXT
232144	1	QUICK COUPLER 10MM X 1/4 EXT
232152	1	QUICK COUPLER 8MMX1/8 EXT.LONG
241371	1	DIAPHRAGM, NO-DRIP alt 241371
242242	1	O-RING F.AIR HOSE FITTING
242258	1	TRIM 3X10 SELF ADHESIVE 0012"
242284	1	HEAD GASKET F. COMPRESSOR
242285	1	DIAPHRAGM F. F/M COMP.
261455	1	BRUSH KIT-FOAM MARKER MOTOR
261562	1	RUBBER DAMPER 2XM6X25
283697	1	TIESTRAP 200MM
284564	1	PLATE F.COMPRESSOR HEAD
284565	1	PLATE F.COMPRESSOR HEAD
284643	1	COMPRESSOR HEAD F.FOAM MARKER
284665	1	CONNECTING ROD F.COMPRESSOR
284980	1	FLANGE REAR F. F.M.COMPRESSOR
320445	1	FITT.DK HN 1/4"X3/8" BSP
321462	1	CAP F.NO-DRIP ASSY.
322261	1	HOUSING F.SAFETY VALVE 3/8"
440650	1	SCREW 3.5x13 STAINLESS
460261	1	NUT HEX M6X1 LOCK A2 DIN985
729645	1	NON-DRIP SPRING ASSY.GREEN 10
927264	1	HOSE R X PE D6/D4 X 0012"
927306	1	HOSE R X PE D8/D6 X 0012"BLACK
927330	1	HOSE R X PE D10/D8 X 012"BLACK
10518703	1	SNAP-RING OUTER 8X1
21002103	1	BEARING, 6200 2ZJEM (SKF)
26001403	1	HC FOAM MARKR CONSOLE VS3.0.00
26001503	1	HC FOAM MARKER CONSOLE MT.KIT
26001803	1	POWER CABLE
26001903	1	15' 7-PIN EXTENSION CABLE
26004103	1	FOAM MARKER CNTRL MOD CABL STD
26008703	1	FOAM MARKER CONTROL SCII
26010403	1	TOGGLE SWITCH MICRO-TRAK F.M.
26023700	1	SOLENOID VAL 12V 1/8' FLO '07
28025503	1	PLUG F.DRILLED HOLE 1/2"
28025603	1	PLUG F.DRILLED HOLE 3/4"
39122000	1	DISTR.HOUSING F.FOAM MARKER'07
70019403	1	FOAM MARKER COMPRESSOR KIT STD

WWW.FOTRONIK.PL

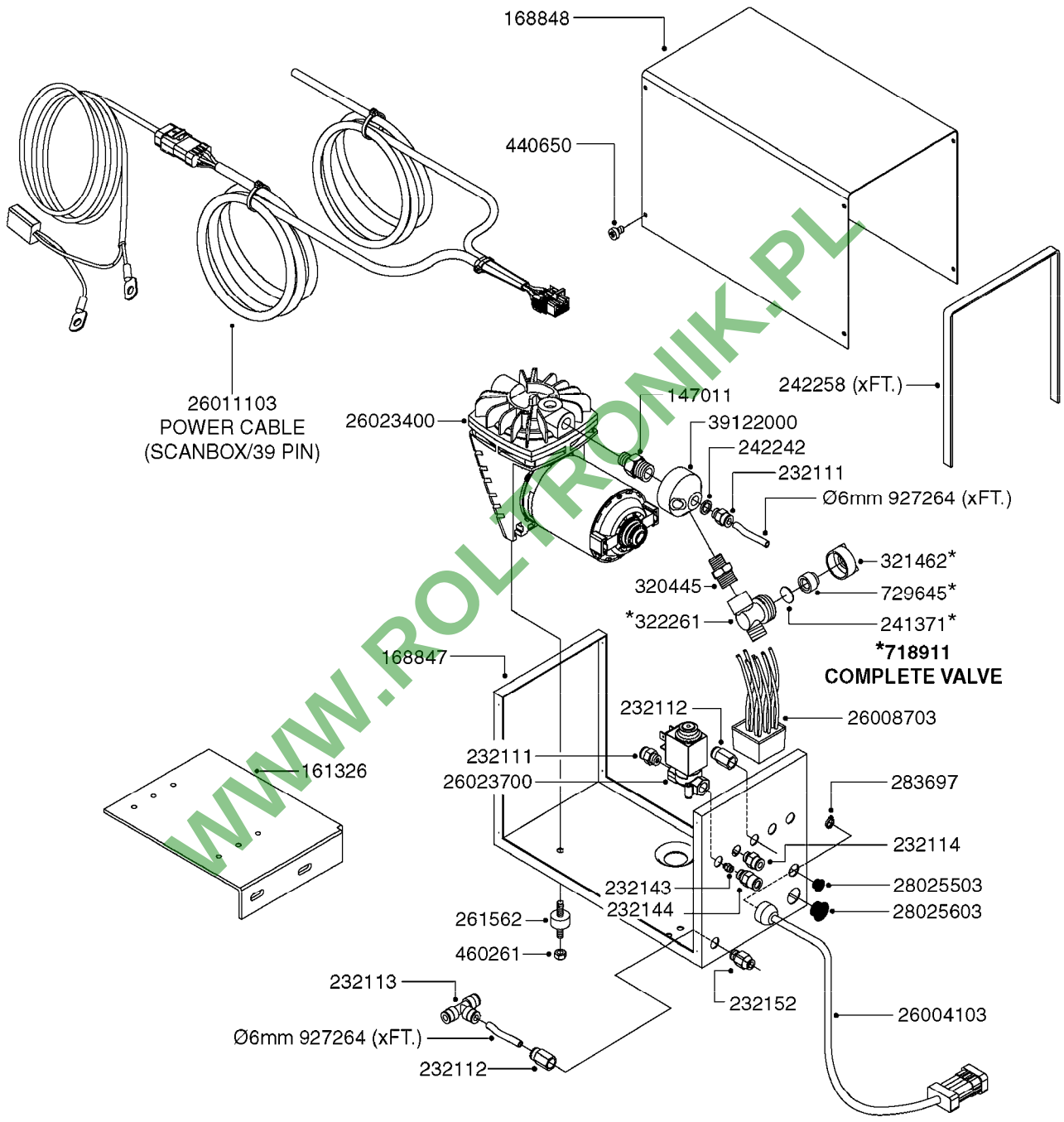

WWW.ROLTRONIK.PL

K0400

*Ø8mm 927306 (xFT.)
*Ø10mm 927330 (xFT.)

70062503 - COMPLETE ASSEMBLY

parts-nº	order qty	description
147011	1	HEX NIPPLE 3/8'X1/4'BSP BRASS
161326	1	MOUNT BKT. F. FOAM COMP.BOX 98
168847	1	ENCLOSURE LOWER F.MARKER
168848	1	COVER F. FOAM MARKER
232111	1	QUICK COUPLER 6MM X 1/8 EXT.
232112	1	QUICK COUPLER 6MM 1/8 INT.
232113	1	QUICK COUPLER 6MM T-PIECE
232114	1	COUPLER 1/8" THREADX8MM HOSE
232143	1	REDUCER 1/4'INT-1/8'EXT
232144	1	QUICK COUPLER 10MM X 1/4 EXT
232152	1	QUICK COUPLER 8MMX1/8 EXT.LONG
241371	1	DIAPHRAGM, NO-DRIP alt 241371
242242	1	O-RING F.AIR HOSE FITTING
242258	1	TRIM 3X10 SELF ADHESIVE 0012"
261562	1	RUBBER DAMPER 2XM6X25
283697	1	TIESTRAP 200MM
320445	1	FITT.DK HN 1/4"X3/8" BSP
321462	1	CAP F.NO-DRIP ASSY.
322261	1	HOUSING F.SAFETY VALVE 3/8"
440650	1	SCREW 3.5x13 STAINLESS
460261	1	NUT HEX M6X1 LOCK A2 DIN985
718911	1	VALVE (SAFETY) F.MARKER
729645	1	NON-DRIP SPRING ASSY.GREEN 10
927264	1	HOSE R X PE D6/D4 X 0012"
927306	1	HOSE R X PE D8/D6 X 0012"BLACK
927330	1	HOSE R X PE D10/D8 X 012"BLACK
26004103	1	FOAM MARKER CNTRL MOD CABL STD
26008703	1	FOAM MARKER CONTROL SCII
26011103	1	FOAMER POWER/CONTROL CABLE 39P
26023400	1	COMPRESSOR F.FOAM MARKER CM40
26023700	1	SOLENOID VAL 12V 1/8' FLO '07
28025503	1	PLUG F.DRILLED HOLE 1/2"
28025603	1	PLUG F.DRILLED HOLE 3/4"
39122000	1	DISTR.HOUSING F.FOAM MARKER'07
70062503	1	FOAM MARKER COMPRESSOR,STD,39P

WWW.FC-TRONIK.PL

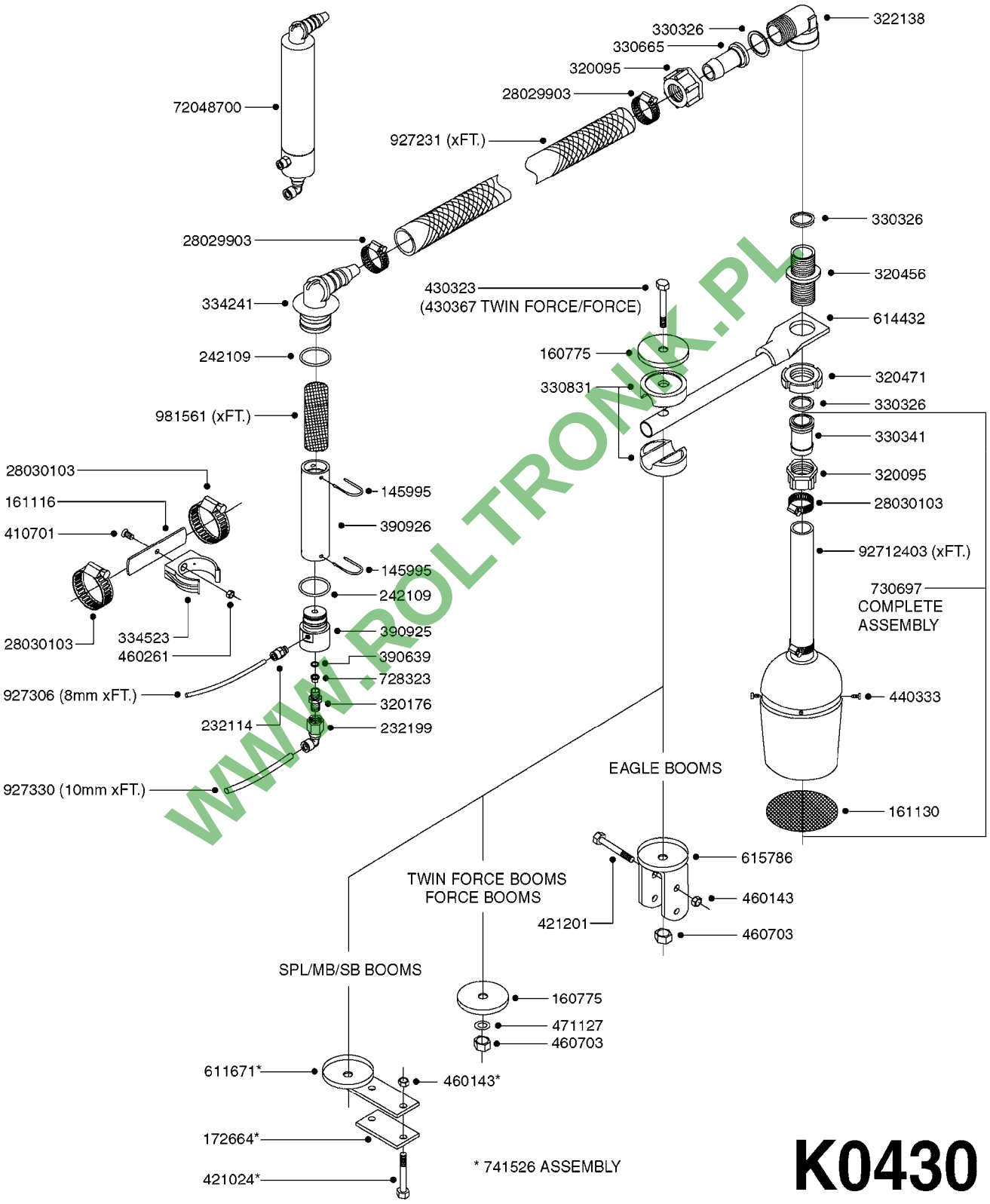

WWW.ROLTRONIK.PL

K0430

parts-nº	order qty	description
145995	1	FITT.DK S-53 FORK
160775	1	WASHER F. FRICTION PLATE
161116	1	FLATBAR PLATE 3 X 25 X 110
161130	1	FILTER SCREEN F/FOAM DROPPER
172664	1	FLATBAR BACKING PLATE
232114	1	COUPLER 1/8" THREADX8MM HOSE
232199	1	COUPLER 3/8' BSP-90/10MM HOSE
242109	1	O-RING D32.2x3.0 (USE 242354)
320095	1	FITT.DK NUT 1" BSP
320176	1	FITT.DK HN 3/8"X1/2" BSP
320456	1	FITT.DK BULKHEAD 1"BSP DOUBLE
320471	1	FITT.DK NUT 1" BSP JAMB
322138	1	FITT.DK ELB 1"M X 1"F BSP
330326	1	O-RING D30/D24X2 F.1"NUT
330341	1	FITT.DK HB 1" F. 1" NUT
330665	1	3/4' HOSE TAIL F/1' CAP
330831	1	FRICTION PLATE
334241	1	FITT.DK S-53 ELB.3/4"
334523	1	PIPE HOLDER D51.5
390639	1	O-RING F.NOZZLE FILTER
390925	1	FITTING F.FOAM MIX.CHAMB. STD
390926	1	TUBE,MIX CHAMB. FOAM MARK STD
410701	1	SCREW M6X16 GALV.
421024	1	BOLT HEX 8.8 DEL M8X60
421201	1	BOLT HEX 8.8 DEL M8X70
430323	1	BOLT HEX 8.8 DEL M12X60
430367	1	BOLT HEX 8.8 DEL M12X100 DIN931
440333	1	SCREW 3.5 X 9.5 SS
460143	1	NUT HEX M8 LOCK A2 DIN985
460261	1	NUT HEX M6X1 LOCK A2 DIN985
460703	1	NUT HEX M12X1.75 LOCK DIN985
471127	1	WASHER, M12, Ø24/13.0X 2.5, SS
611671	1	BREAK AWAY HOLDER F-MARKER
614432	1	BREAK AWAY ARM F. FOAM MARKER
615786	1	MOUNT BKT. F.FOAM DROPPER 98
728323	1	VALVE NON-RETURN
730697	1	FOAM DROPPER COMP. BLACK '97
741526	1	FOAM DROPPER MT. KIT MB-SPL
927231	1	HOSE R X PVCX3/4 CLR/BRD 0012"
927306	1	HOSE R X PE D8/D6 X 0012"BLACK
927330	1	HOSE R X PE D10/D8 X 012"BLACK
981561	1	SPONGE MAT. MIX.CHAMBER-x0012"
28029903	1	CLAMP HOSE GEAR P3/4"-S1" 6712
28030103	1	CLAMP HOSE GEAR P5/4-S1.5"6724
72048700	1	MIXING CHAMBER,FOAM MARK. STD
92712403	1	HOSE R X1" X300PSI WP X0012"

WWW.BOLTRONIK.PL

	Agroparts: www.HARDI-INTERNATIONAL.com	
HARDI	FOAM MARKER TANK - NCM/NAV K0470-HIN, 01:01:16	Page 0 Date 16.03.2016 13:55

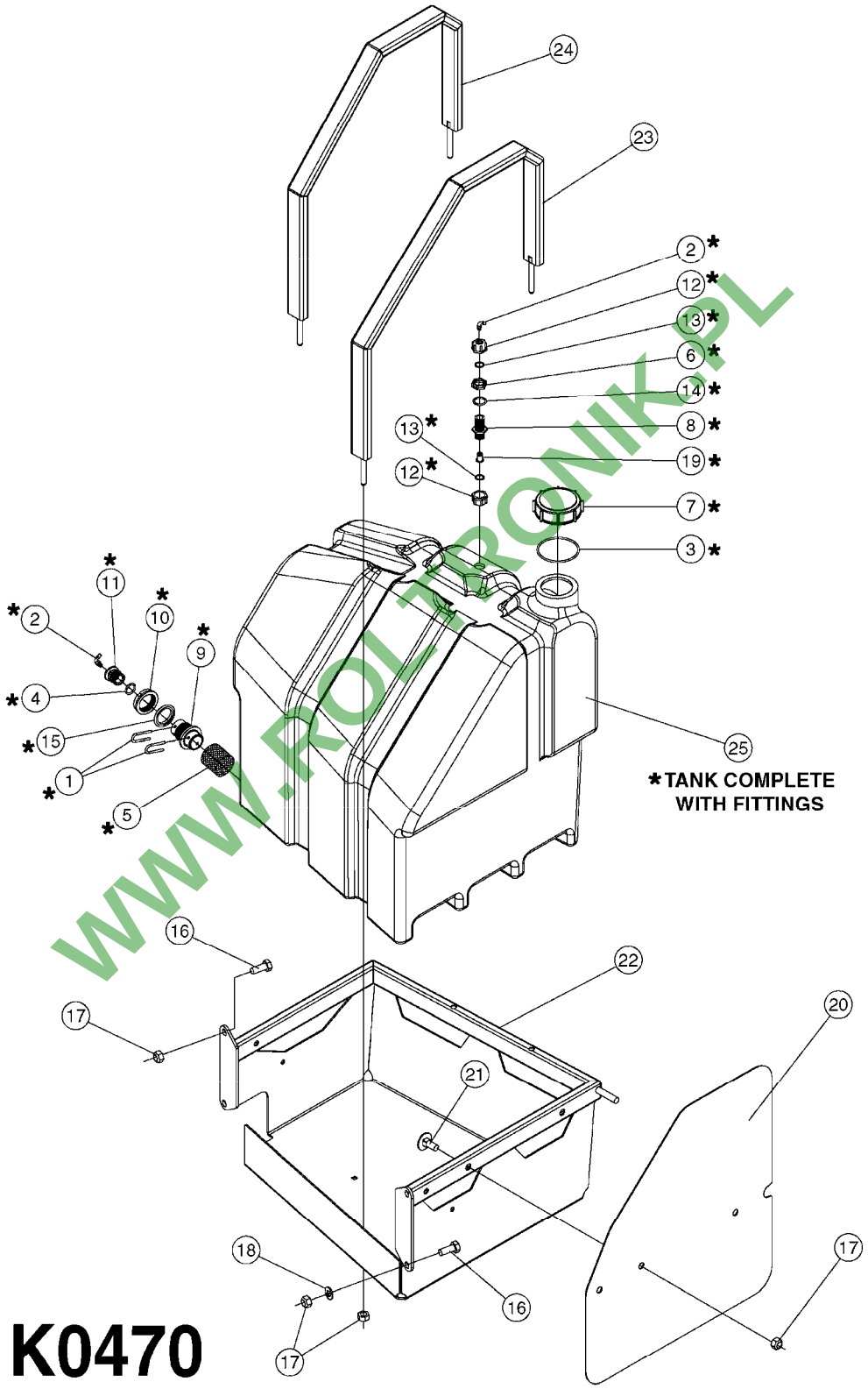

WWW.ROLTRONIK.PL

FOAM MARKER TANK - NCM/NAV
K0470-HIN, 01:01:16

Pos.	parts-n°	order qty	description
1	145994	1	FITT.DK S-40 FORK
2	232150	1	HOSE CONN. 90DEG. 1/8'X8MM PE
3	242043	1	O-RING 49.2 X 5.7
4	242355	1	O-RING D19.2X3.0 VITON F.S-40
5	284353	1	SPONGE FOR FOAM MARKER
6	321307	1	FITT.DK NUT 1/2" BSP JAMB
7	321322	1	SCREW CAP F. S80 X 4
8	321742	1	FITT.DK BULKHEAD 1/2' BSP
9	322102	1	FITT.DK S-40 BULKHEAD
10	322106	1	FITT.DK S-40 BULKHEAD NUT
11	322133	1	FITT.DK S-40 PLUG W 1/8 THREAD
12	322170	1	FITT.DK NUT 1/2"x 1/8"F BSP
13	330212	1	O-RING D19/D14X2.4 F.1/2"NUT
14	332592	1	O-RING D26/D20X3
15	334259	1	GASKET F. S-40 BULKHEAD
16	430286	1	BOLT HEX 8.8 DEL M12X30 FT
17	460703	1	NUT HEX M12X1.75 LOCK DIN985
18	471127	1	WASHER, M12, Ø24/13.0X 2.5, SS
19	728323	1	VALVE NON-RETURN
20	16137100	1	COVER PLATE F.CHEMLOCKER NCM
21	45001300	1	CARRIAGE BOLT M12X35 DIN603 A2
22	63039400	1	CHEMLOCKER FOR NCM BLACK
22	63061400	1	CHEMLOCKER FOR NAVIGATOR RED
23	63042200	1	FOAM TANK STRAP BLACK 451 WIDE
23	63068200	1	FOAM TANK STRAP RED 451 WIDE
24	63042300	1	FOAM TANK STRAP BLACK 403 WIDE
24	63068400	1	FOAM TANK STRAP RED 403 WIDE
25	72437700	1	FM TANK 25 GAL W/FTGS. CM/NAV

WWW.ROLTRONIK.PL

HARDI	**Agroparts: www.HARDI-INTERNATIONAL.com**	
	HOSE REEL - COMMANDER K0500-HIN, 01:01:16	Page 0 Date 16.03.2016 13:55

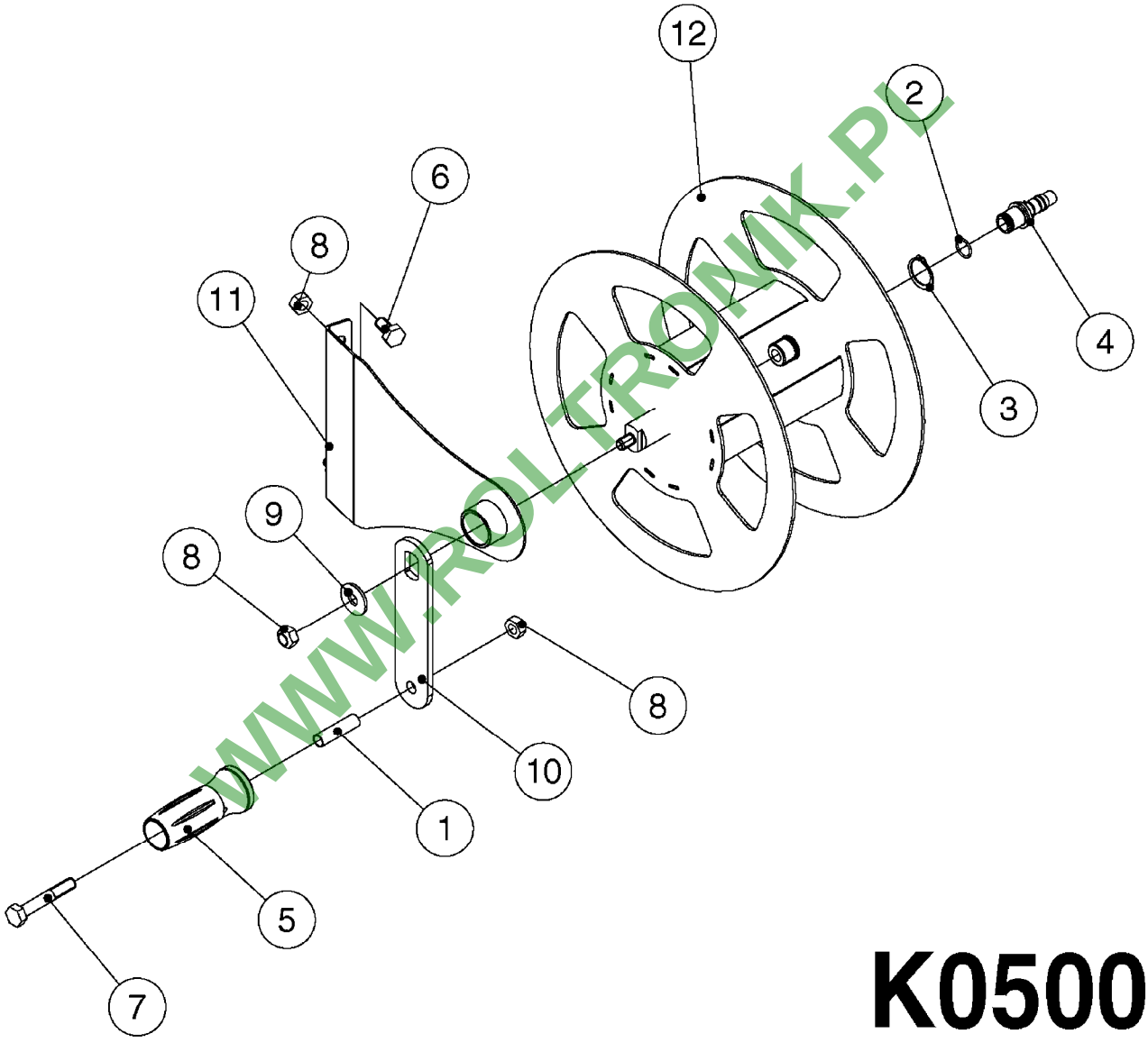

WWW.ROLTRONIK.PL

K0500

HOSE REEL - COMMANDER
K0500-HIN, 01:01:16

Date 16.03.2016 13:55

Pos.	parts-n°	order qty	description
1	159912	1	BUSHING 12.0/10.2 - 45.5
2	242003	1	O-RING D14.1X1.6 VITON
3	281982	1	SNAP-RING OUTER 26X1.2 DIN4711
4	332905	1	FITT.DK HB 1/2" F. 3/4" CAP
5	334104	1	GRIP
6	420604	1	BOLT HEX 8.8 DEL M10X25 FT DIN933
7	420626	1	BOLT HEX 8.8 DEL M10X20 FT
8	460423	1	NUT HEX M10X1.5 LOCK
9	471140	1	WASHER D30/D10.5X2.5 STAINLESS
10	16118400	1	ARM FOR HANDLE ON HOSE REEL
11	61032400	1	SIDE BRACKET F. HOSE REEL
12	63036500	1	HOSE REEL FOR HOSE

WWW.ROLTRONIK.PL

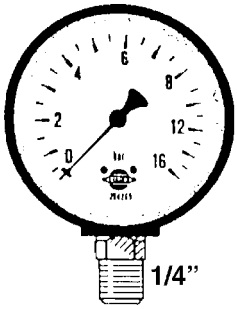

284269
0-8-16 bar
BRASS
2.5” GAUGE

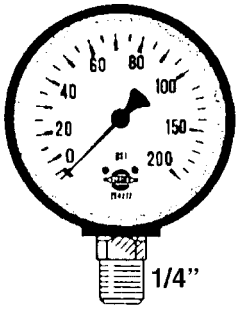

28026203
0-100-200 psi
STAINLESS
2.5” GAUGE

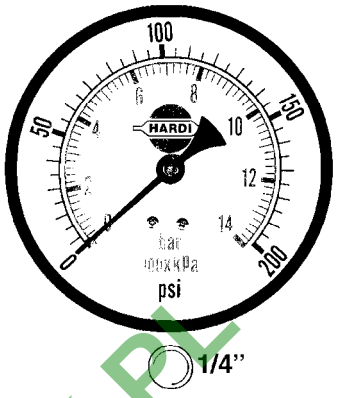

28014403
200 psi (14 bar)
STAINLESS
4” GAUGE

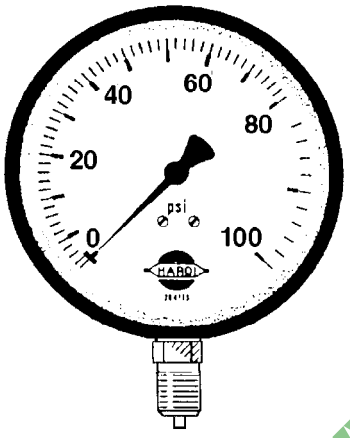

844086
100 bar (1400 psi)
BRASS
2.5” GAUGE

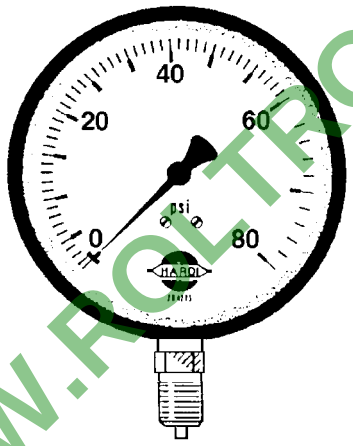

844088
80 bar (1200 psi)
STAINLESS
1.5” GAUGE

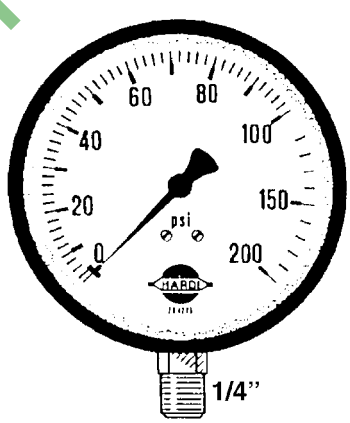

28026103
0-100-200 psi
STAINLESS
4” GAUGE

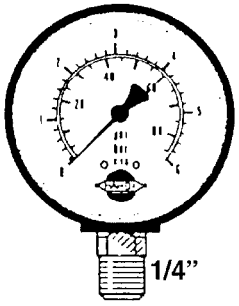

280637
6 bar (85 psi)
BRASS
2.5” GAUGE

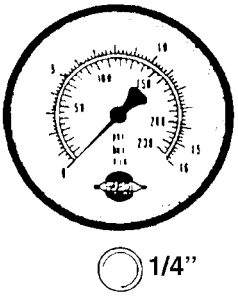

283754
16 bar (230 psi)
BRASS
2.5” GAUGE

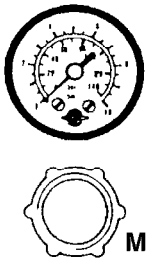

844082
10 bar (140 psi)
BRASS
1.5” GAUGE

K0560

WWW.ROLTRONIK.PL

PRESSURE GAUGES
K0560-HIN, 01:01:16

parts-n°	order qty	description
280637	1	GAUGE 2.5"BR BOTT.PSI85 BAR6
283754	1	GAUGE 2.5'BR REAR PSI200 BAR16
284269	1	GAUGE 2.5'BR BOTT.BAR16
844082	1	GAUGE 1.5'BR REAR PSI140BAR10
844086	1	GAUGE 2.5'BR BOTT.PSI1000BAR80
844088	1	GAUGE 2.5'BR BOTT PSI1200BAR80
28014403	1	GAUGE 4"BR REAR PSI200
28026103	1	GAUGE 200PSI/BR,4",1/4"BSP-BTM
28026203	1	GAUGE 200PSI/BR,2.5"1/4BSP-BTM

WWW.ROLTRONIK.PL

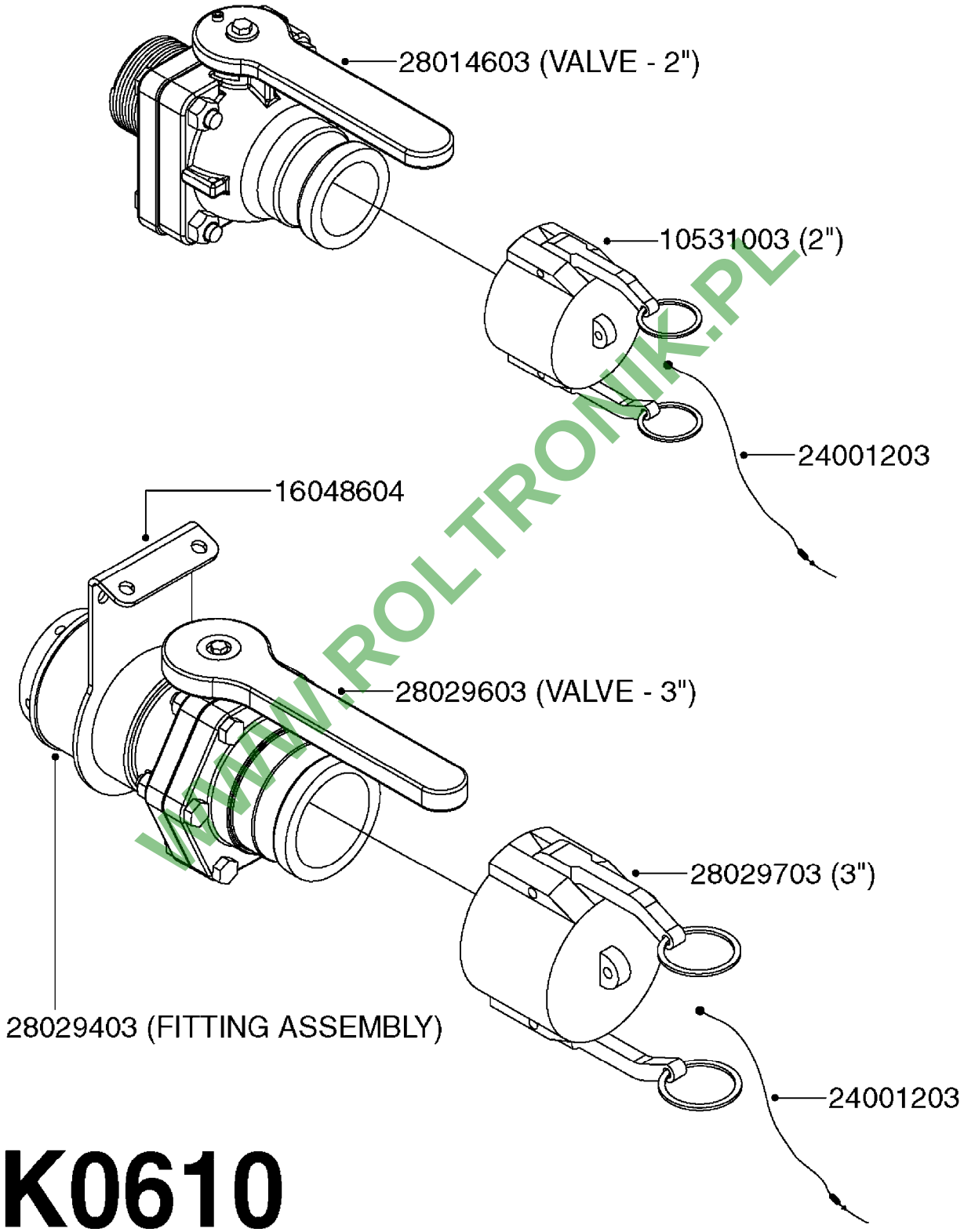

K0610

WWW.ROLTRONIK.PL

parts-nº	order qty	description
10531003	1	CAP F.MALE QUICK COUPLER 2"
16048604	1	QUICK FILL BKT. NAV. 575-1100
24001203	1	RBR LANYARD 11" F.QCK FILL CAP
28014603	1	VALVE STUBBY 2" BANJO
28029403	1	3"NPT MALE X S93 FEMALE
28029603	1	VALVE STUBBY 3" BANJO
28029703	1	CAP F.MALE QUICK COUPLER 3"

WWW.ROLTRONIK.PL

	Agroparts: www.HARDI-INTERNATIONAL.com	
HARDI	RINSE SYSTEM NOZZLE - LOW MOD. K0740-HIN, 01:01:16	Page 0 Date 16.03.2016 13:55

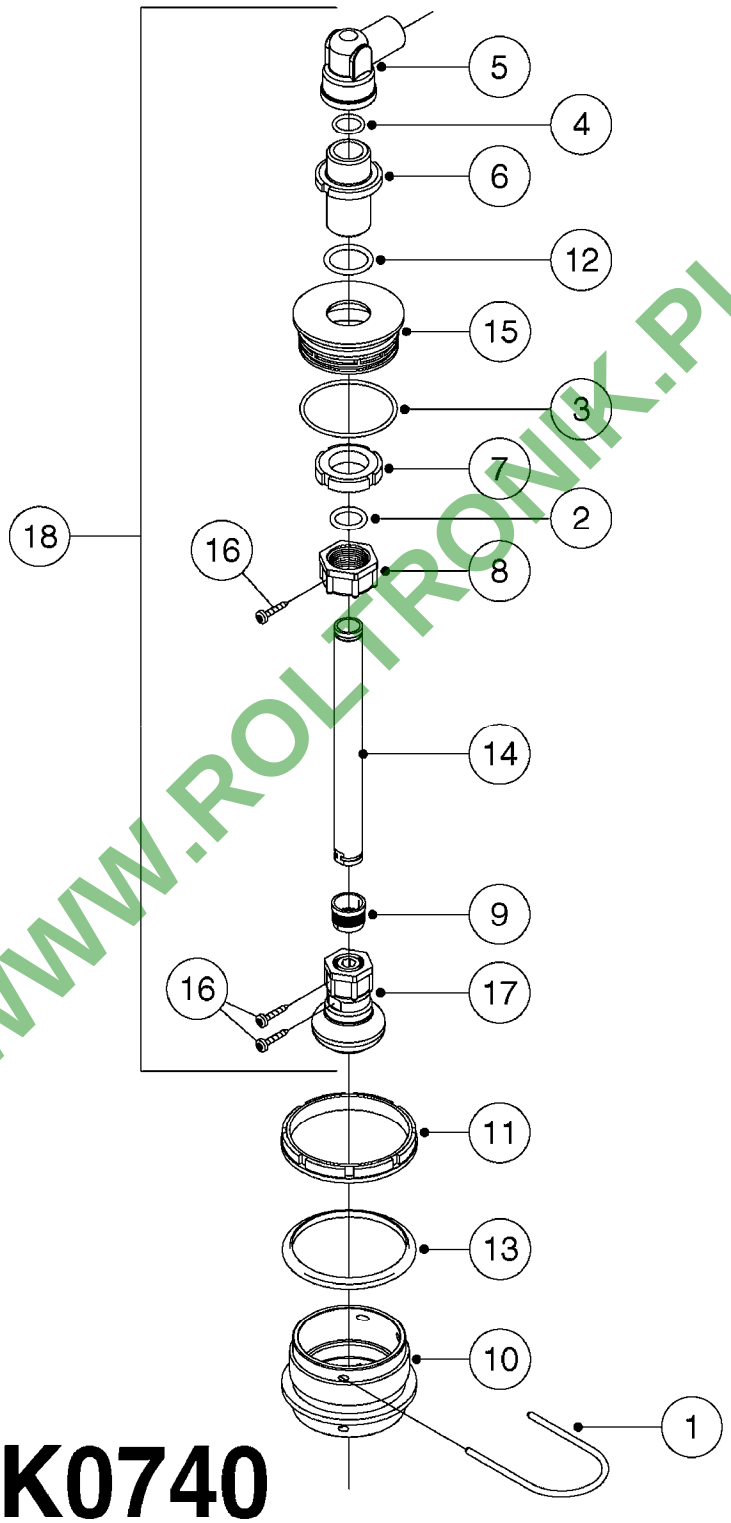

WWW.ROLTRONIK.PL

K0740

RINSE SYSTEM NOZZLE - LOW MOD.
K0740-HIN, 01:01:16

Date 16.03.2016 13:55

Pos.	parts-n°	order qty	description
1	145997	1	FITT.DK S-93 FORK
2	240306	1	O-RING D29/D21X4
3	242351	1	O-RING D69.5X3.0 VITON F.S-93
4	242355	1	O-RING D19.2X3.0 VITON F.S-40
5	320342	1	FITT.DK EL 3/4"M X 1"F BSP
6	320456	1	FITT.DK BULKHEAD 1"BSP DOUBLE
7	320471	1	FITT.DK NUT 1" BSP JAMB
8	320574	1	FITT.DK NUT 1" BSP SPECIAL
9	321484	1	BUSHING THREADED F.NOZZ.TUBE
10	322105	1	FITT.DK S-93 BULKHEAD DOUBLE
11	322109	1	FITT.DK S-93 BULKHEAD NUT
12	332577	1	O-RING D38/D30X4 F.1" PUR.
13	334262	1	GASKET F.S-93 BULKHEAD
14	341106	1	TUBE F.RINSE NOZZLE L=220
15	390485	1	FITT.DK S-93 PLUG W D34 HOLE
16	440665	1	SCREW M4.2X16 STAINLESS
17	728014	1	RINSE NOZZLE MOUNTED
18	72358000	1	TANK RINSE LOW MOD.ASSMBLY NCM

WWW.ROLTRONIK.PL

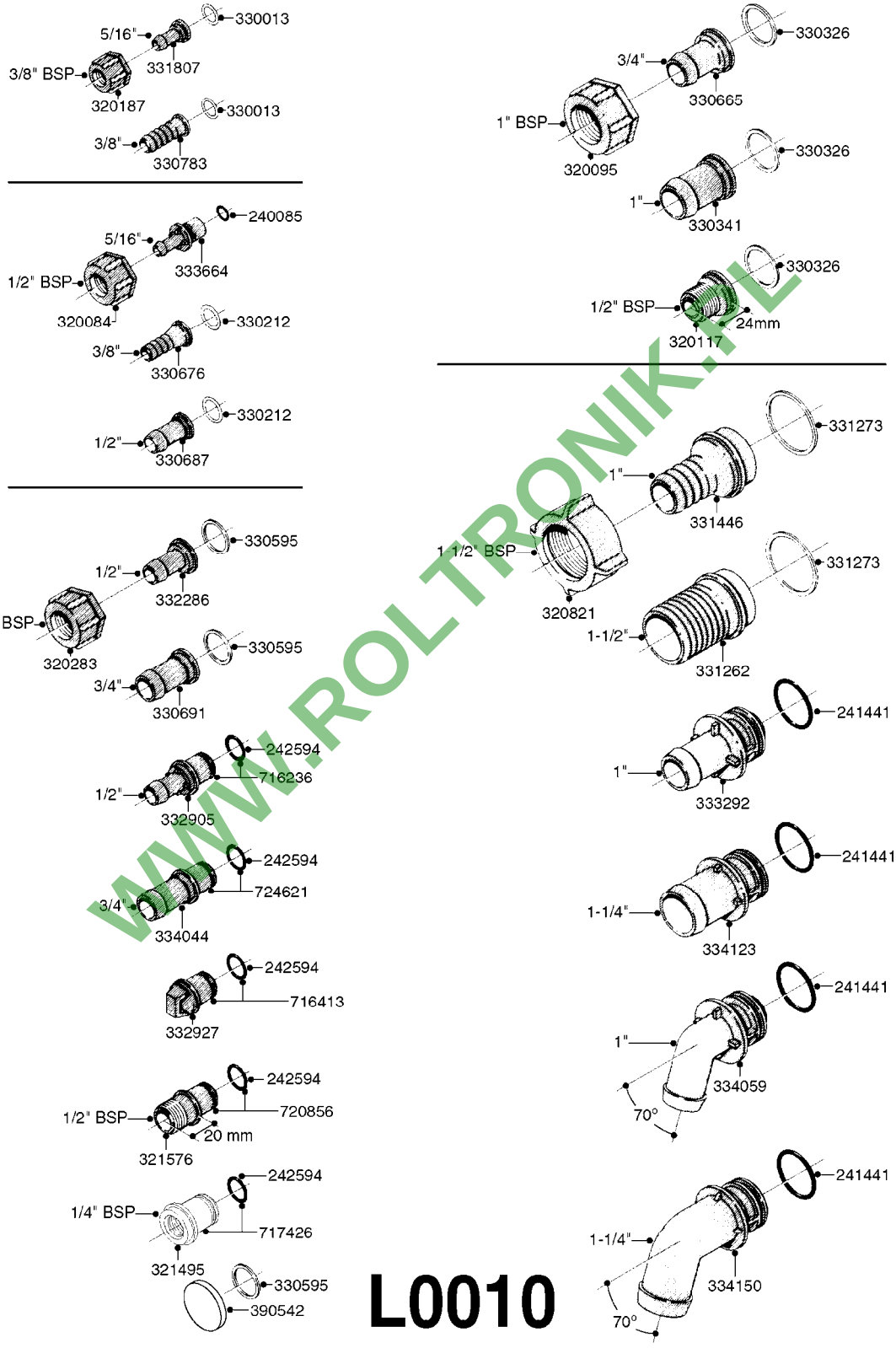

L0010

WWW.ROLTRONIK.PL

parts-nº	order qty	description
240085	1	O-RING D13,1/8,3X02,4 NITRIL
241441	1	O-RING D29.3X3
242594	1	O-RING D14 X 1.78 SCH.70-EPDM
320084	1	FITT.DK NUT 1/2" BSP
320095	1	FITT.DK NUT 1" BSP
320117	1	FITT.DK CONN.1/2"BSP F. 1" CAP
320187	1	FITT.DK CAP 3/8" BSP BLACK
320283	1	FITT.DK NUT 3/4"BSP
320821	1	FITT.DK NUT 1-1/2" BSP
321495	1	FITT.DK REDUC 1/4'BSP F.3/4'NT
321576	1	FITT.DK CONN 1/2"BSP F.3/4"NUT
330013	1	O-RING D15/D10X2.5 F.3/8"NUT
330212	1	O-RING D19/D14X2.4 F.1/2"NUT
330326	1	O-RING D30/D24X2 F.1"NUT
330341	1	FITT.DK HB 1" F. 1" NUT
330595	1	O-RING D24.6/D20X2.1 -3/4"
330665	1	3/4' HOSE TAIL F/1' CAP
330676	1	FITT.DK HB 3/8" F. 1/2" NUT
330687	1	FITT.DK HB 1/2" F. 1/2" NUT
330691	1	FITT.DK HB 3/4'F.3/4' NUT
330783	1	FITT.DK HB 3/8"F.3/8" NUT
331262	1	FITT.DK HB 1-1/2" F. 1-1/2"NUT
331273	1	O-RING D44/D38X2 F.1-1/2"
331446	1	FITT.DK HB 1" F.1-1/2" NUT
331807	1	FITT.DK HB 5/16" F.3/8" NUT
332286	1	FITT.DK HB 1/2" F. 3/4" NUT
332905	1	FITT.DK HB 1/2" F. 3/4" CAP
332927	1	PLUG F. NOZZLE TUBE 3/4'
333292	1	FITT.DK HB 1"O'RING F.1-1/2"
333664	1	FITT.DK HB 5/16' F. 1/2' NUT
334044	1	FITT.DK HB 3/4' F. 3/4' CAP
334059	1	FITT.DK EL 1" 110 DEG.F.1-1/2"
334123	1	FITT.DK HB 1-1/4"O-RNG F.1-1/2
334150	1	FITT.DK HB 1-1/4" 110 F.1-1/2"
390542	1	PLUG WASHER FOR 3/4'CAP NUT
716236	1	FITT.DK HB 1/2" ASSY. F. 3/4"
716413	1	FITT.DK PLUG ASSY. F.NOZ TUBE
717426	1	FITT.DK REDUC 1/4"BSP F.3/4"N
720856	1	FITT.DK 1/2'BSP ASSY.F.3/4'NUT
724621	1	FITT.DK HB 3/4"ASSY F.3/4" NUT

WWW.PCL-TRONIK.PL

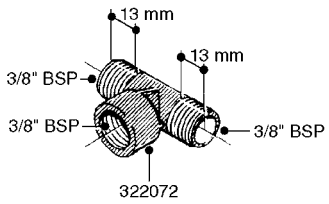

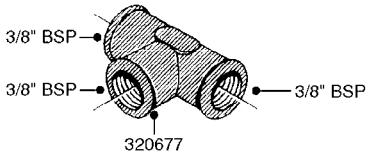

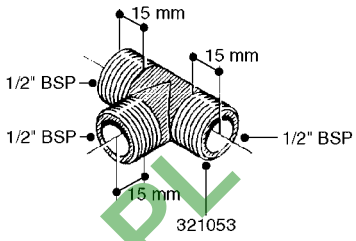

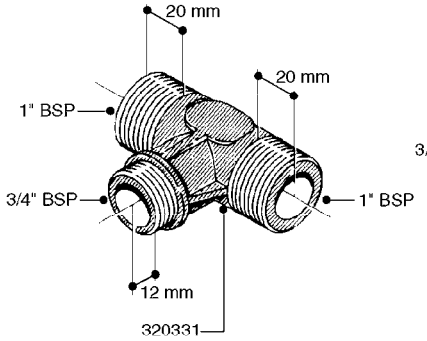

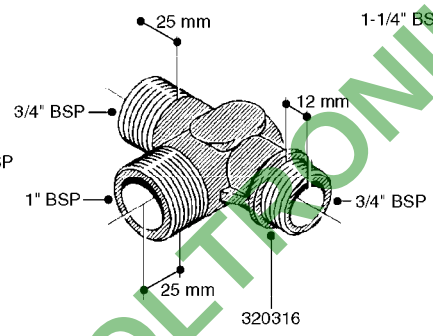

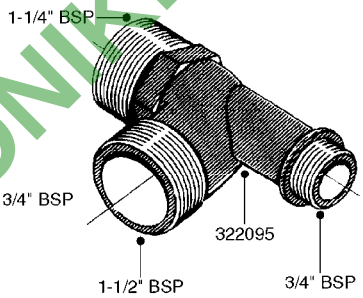

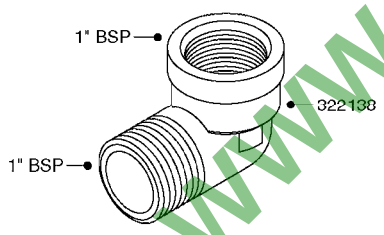

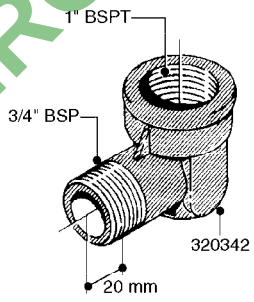

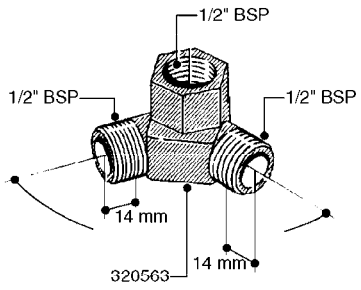

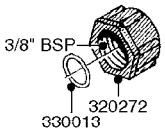

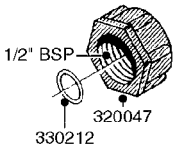

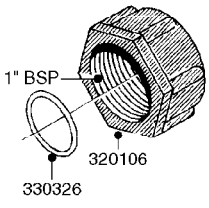

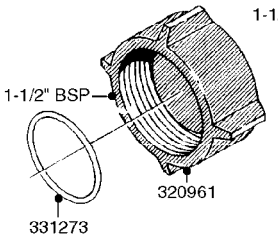

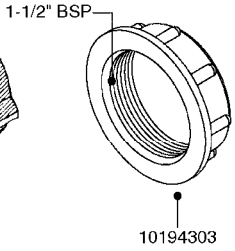

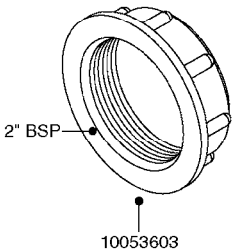

L0020

WWW.ROLTRONIK.PL

parts-n°	order qty	description
10053603	1	FITT. CAPNUT 2"BSP 5601
10194303	1	CAP BLANK 1 1/2 MCPHEE 210060
320047	1	FITT.DK CAPNUT 1/2" BSP
320106	1	FITT.DK CAPNUT 1" BSP
320272	1	FITT.DK CAPNUT 3/8' BSP
320316	1	FITT.DK TEE 3/4" X3/4" X1"BSP
320331	1	FITT.DK TEE 1" - 1" - 3/4" BSP
320342	1	FITT.DK EL 3/4"M X 1"F BSP
320563	1	FITT.DK 3 WAY 1/2" 110 DEG.
320677	1	NO LONGER AVAILABLE
320961	1	FITT.DK CAPNUT 1-1/2" BSP
321053	1	FITT.DK TEE 1/2 X1/2 X1/2" BSP
322072	1	FITT.DK TEE 3/8'X3/8'X3/8' BSP
322095	1	FITT.DK TEE 1-1/2 X1-1/4 X3/4" BSP
322138	1	FITT.DK ELB 1"M X 1"F BSP
330013	1	O-RING D15/D10X2.5 F.3/8"NUT
330212	1	O-RING D19/D14X2.4 F.1/2"NUT
330326	1	O-RING D30/D24X2 F.1"NUT
331273	1	O-RING D44/D38X2 F.1-1/2"

WWW.ROLTRONIK.PL

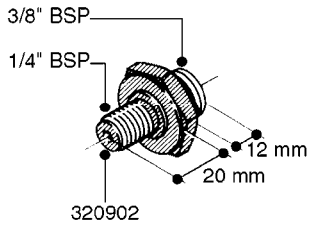

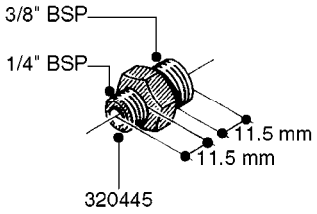

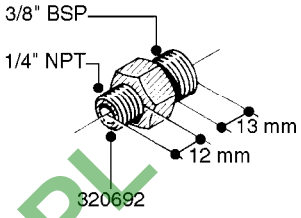

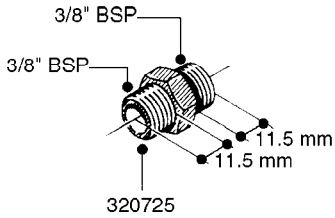

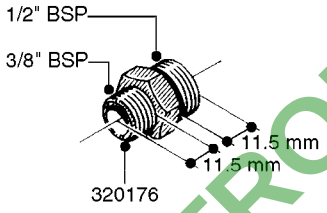

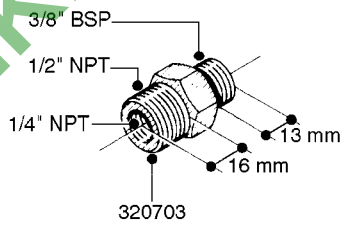

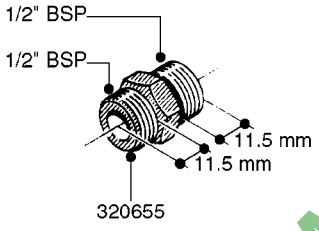

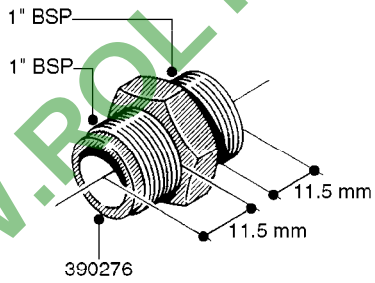

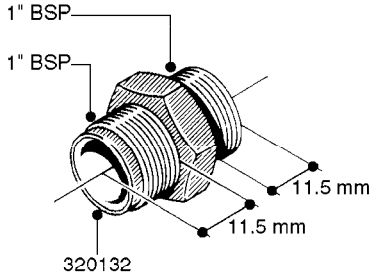

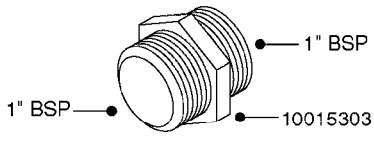

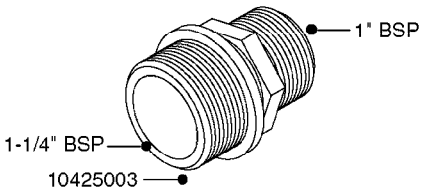

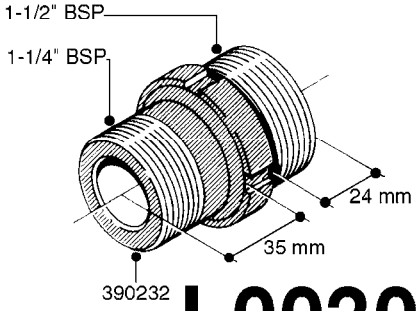

L0030

WWW.ROLTRONIK.PL

parts-n°	order qty	description
10015303	1	FITT.PO.HN 1.00X1.00 M1000
10425003	1	FITT.PO.HN 1.25X1.00 MCPHEE
320132	1	FITT.DK HN 1" BSP
320176	1	FITT.DK HN 3/8"X1/2" BSP
320445	1	FITT.DK HN 1/4"X3/8" BSP
320655	1	FITT.DK HN 1/2"-1/2" BSP
320692	1	FITT.DK HN 3/8'BSPX1/4'NPT
320703	1	FITT.DK HN 3/8BSP X1/2 &1/4NPT
320725	1	FITT.DK NIPPLE 3/8"-3/8" BSP
320902	1	FITT.DK HN 3/8'X 1/4' BSP
390232	1	FITT.DK HN 1-1/2' X 1-1/4' BSP
390276	1	FITT.DK HN 1'BSP

WWW.ROLTRONIK.PL

HARDI	**Agroparts: www.HARDI-INTERNATIONAL.com**	
	FITTINGS - NIPPLES & ELBOWS L0040-HIN, 01:01:16	Page 0 Date 16.03.2016 13:55

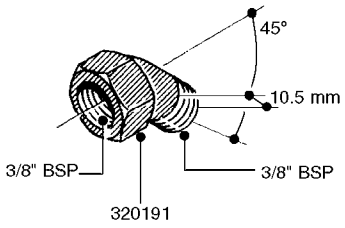

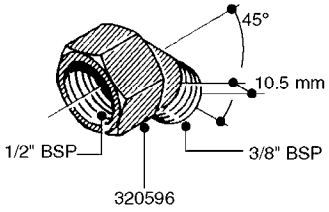

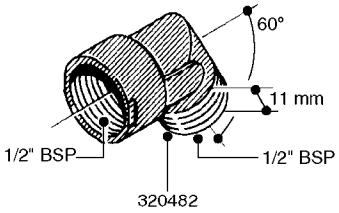

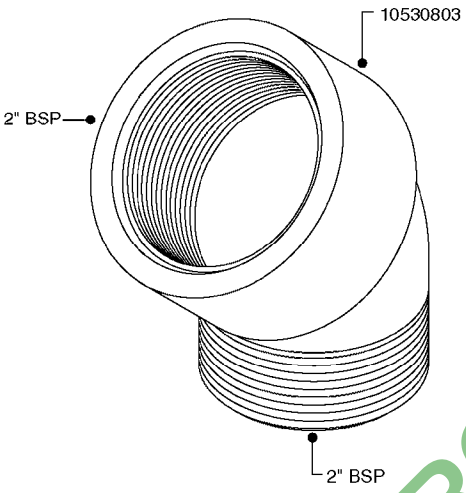

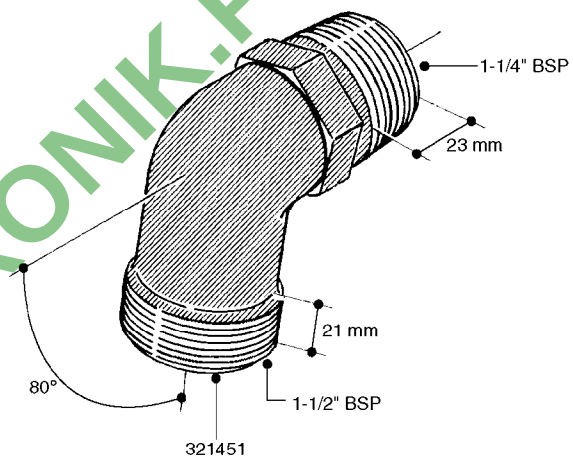

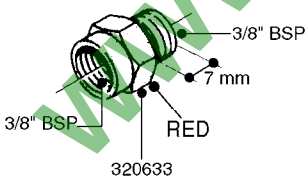

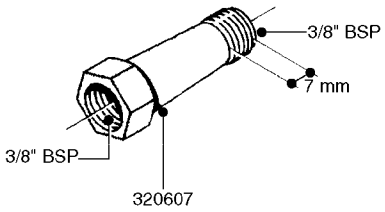

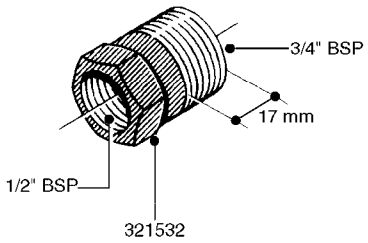

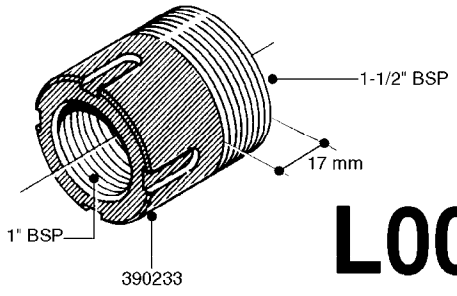

L0040

WWW.ROLTRONIK.PL

parts-n°	order qty	description
10530803	1	FITT.PO.SE 2.00X2.00 45 DEG.
320191	1	FITT.DK ELB 3/8' BSP 45 DEGREE
320482	1	FITT.DK ELB. 1/2" BSP 60 DEG.
320596	1	FITT.DK ELB 3/8'-1/2'BSP 45DEG
320607	1	FITT.DK HN 3/8M X 3/8F BSP LNG
320633	1	FITT.DK HN 3/8"M X 3/8"F BSP
321451	1	FITT.DK ELB.1-1/2 X1-1/4 80DEG
321532	1	FITT.DK REDUC 3/4' X 1/2' BSP
390233	1	FITT.DK REDUC 1-1/2" X 1" BSP

WWW.ROLTRONIK.PL

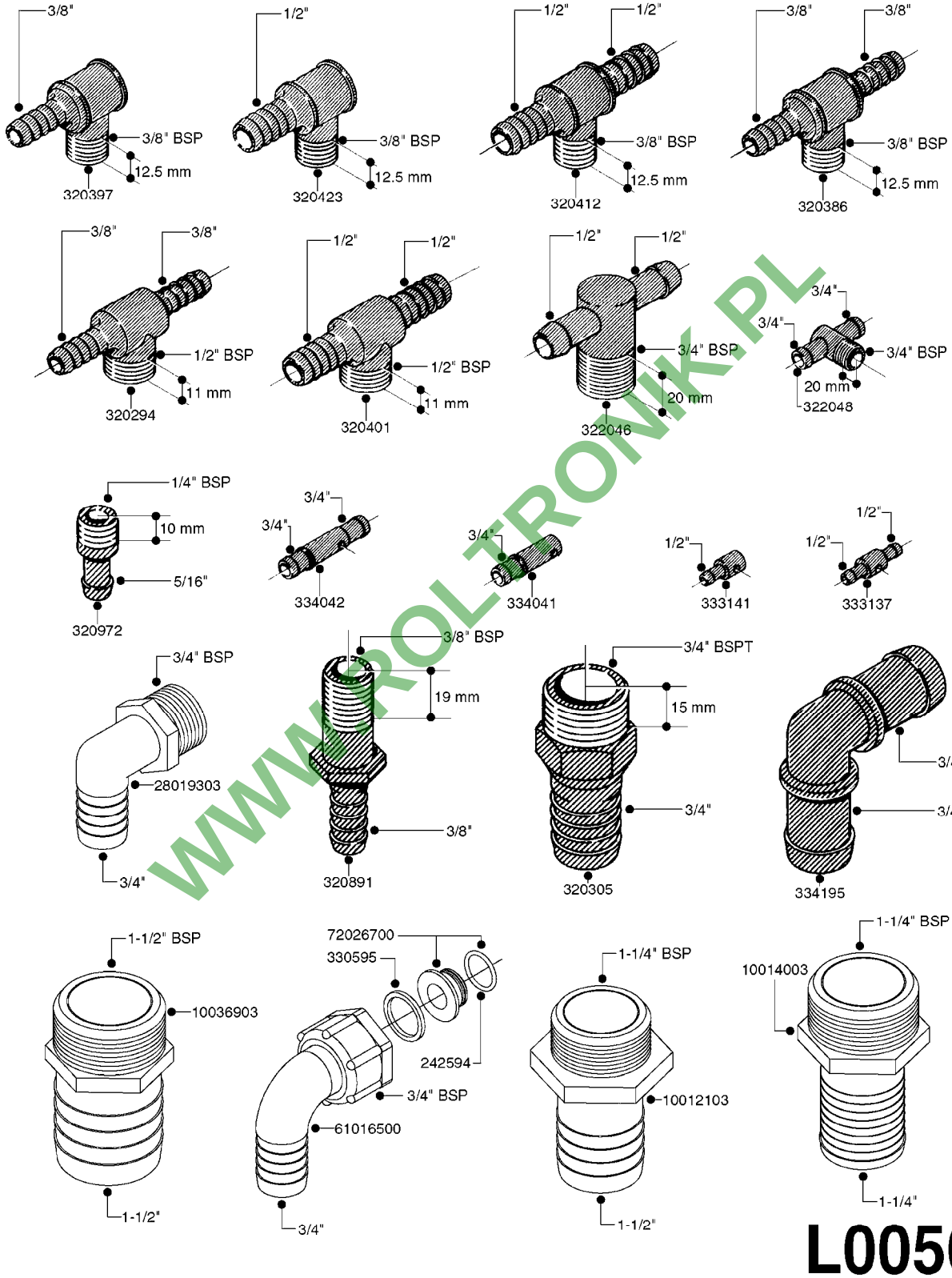

L0050

WWW.ROLTRONIK.PL

parts-n°	order qty	description
242594	1	O-RING D14 X 1.78 SCH.70-EPDM
320294	1	FITT.DK TEE 3/8X3/8HB X1/2"BSP
320305	1	FITT.DK HB 3/4'- 3/4' BSP
320386	1	FITT.DK TEE 3/8X3/8HB X3/8"BSP
320397	1	FITT.DK ELB 3/8"HB X 3/8" BSP
320401	1	FITT.DK TEE 1/2X1/2HB X1/2"BSP
320412	1	FITT.DK TEE 1/2X1/2HB X3/8'BSP
320423	1	FITT.DK ELB 1/2'HB X 3/8' BSP
320891	1	FITT.DK HB 3/8'- 3/8' BSP
320972	1	FITT.DK HB 5/16'- 1/4' BSP
322046	1	FITT.DK TEE 1/2X1/2HB X3/4'BSP
322048	1	FITT.DK TEE 3/4X3/4HB X3/4'BSP
330595	1	O-RING D24.6/D20X2.1 -3/4"
333137	1	FITT.DK CONN.1/2" F.NOZZ. DOUB
333141	1	FITT.DK CONN.1/2" F.NOZZ.SING
334041	1	FITT.DK CONN.3/4' F.NOZZ. SING
334042	1	FITT.DK CONN.3/4' F.NOZZ. DOUB
334195	1	FITT.DK ELB. 3/4"HB X 3/4"HB
10012103	1	FITT.PO.HB 1.25X1.50 IMB1012
10014003	1	FITT.PO.HB 1.25X1.25 IMB1010
10036903	1	FITT.PO.HB 1.50X1.50 IMB1212
28019303	1	FITTING HB ELB 3/4NPT-3/4HOSE
61016500	1	HOSE TAIL 3/4" 90°+RG CAP 3/4"
72026700	1	NOZZLE TUBE ADAPTER W/O-RING

WWW.ROLTRONIK.PL

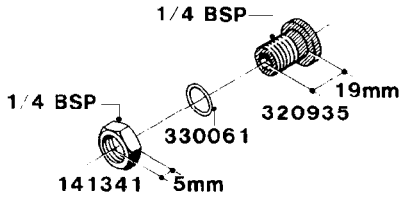

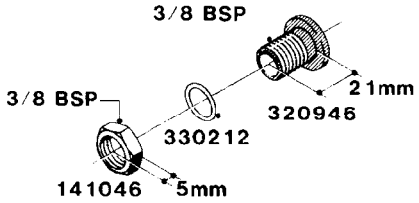

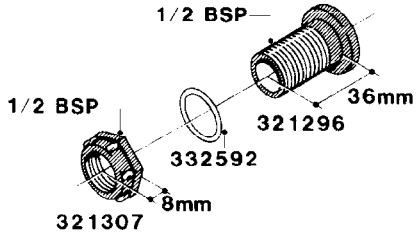

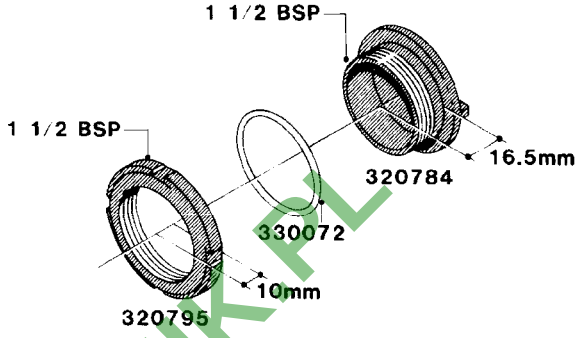

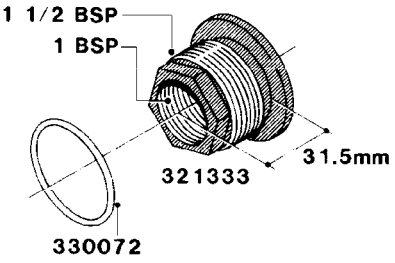

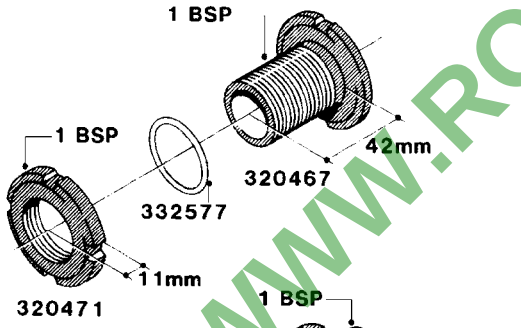

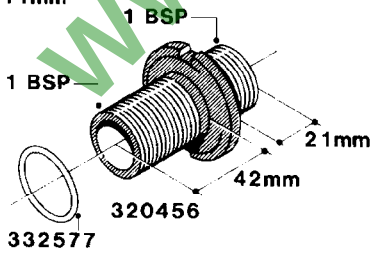

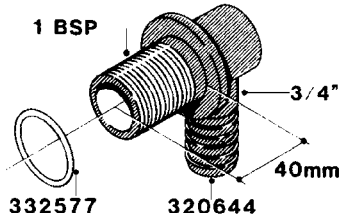

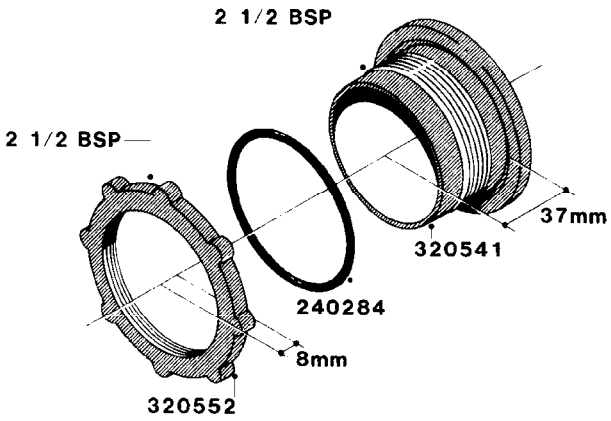

WWW.ROLTRONIK.PL

L0060

parts-nº	order qty	description
141046	1	NUT 3/8" BSP
141341	1	NUT 1/4' BSP
240284	1	O-RING D82,5/75 X 3,5
320456	1	FITT.DK BULKHEAD 1"BSP DOUBLE
320467	1	FITT.DK BULKHEAD 1"BSP SINGLE
320471	1	FITT.DK NUT 1" BSP JAMB
320541	1	FITT.DK BULKHEAD 2-1/2'BSP SIN
320552	1	FITT.DK NUT 2-1/2' BSP JAMB
320644	1	FITT.DK ELB.3/4"HB X 1" BSP
320784	1	FITT.DK CAP 1-1/2" BSP
320795	1	FITT.DK NUT 1-1/2" BSP JAMB
320935	1	FITT.DK BULKHEAD 1/4' BSP SING
320946	1	FITT.DK BULKHEAD 3/8' BSP SING
321296	1	FITT.DK BULKHEAD 1/2" BSP SING
321307	1	FITT.DK NUT 1/2" BSP JAMB
321333	1	FITT.DK BULK 1-1/2" X 1"F BSP
330061	1	O-RING D16/D11X2,5
330072	1	O-RING D53.5/D45.5X4
330212	1	O-RING D19/D14X2.4 F.1/2"NUT
332577	1	O-RING D38/D30X4 F.1" PUR.
332592	1	O-RING D26/D20X3

WWW.ROLTRONIK.PL

	Agroparts: www.HARDI-INTERNATIONAL.com	
HARDI	FITTINGS - S-40 L0070-HIN, 01:01:16	Page 0 Date 16.03.2016 13:55

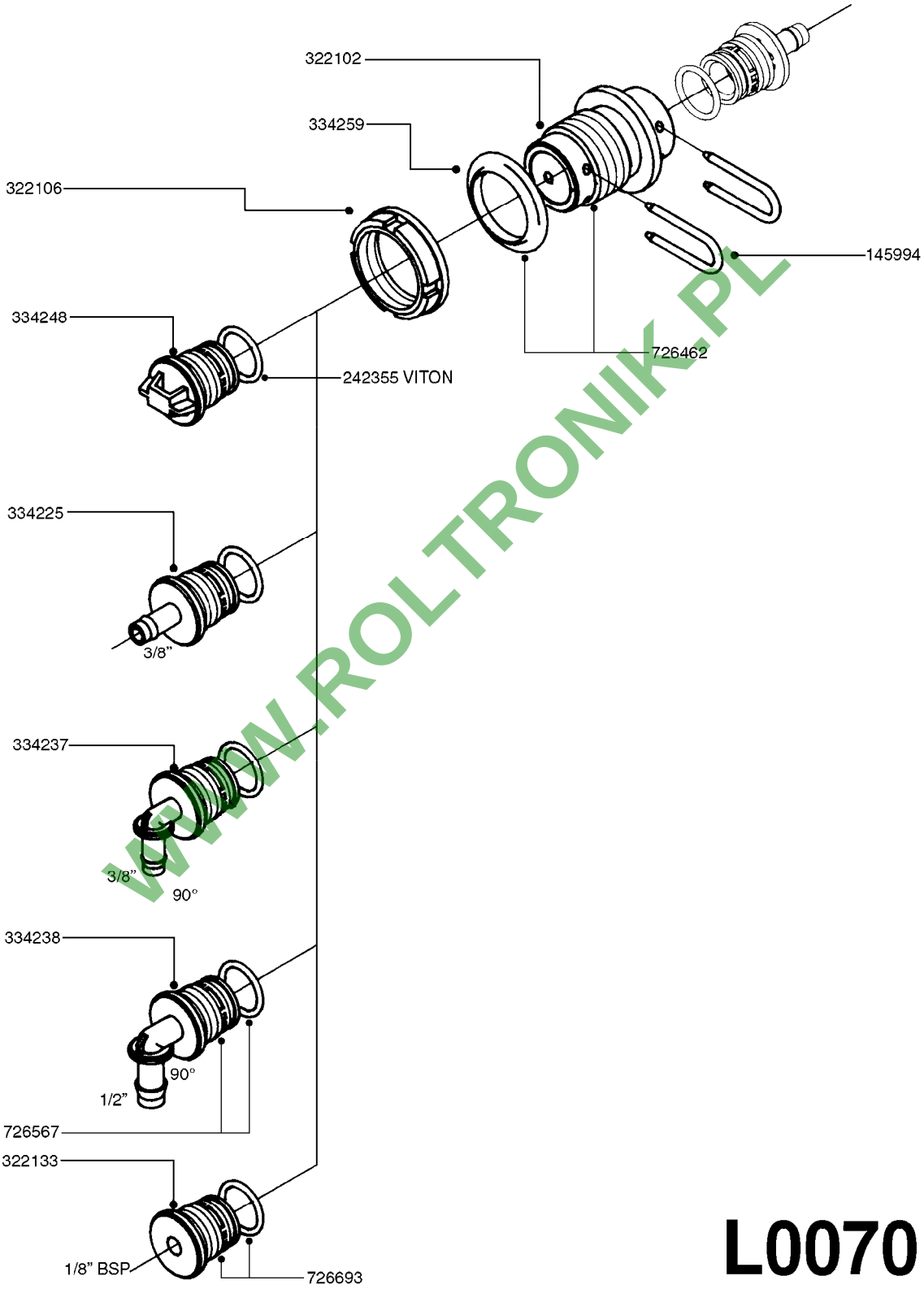

WWW.ROLTRONIK.PL

L0070

parts-n°	order qty	description
145994	1	FITT.DK S-40 FORK
242355	1	O-RING D19.2X3.0 VITON F.S-40
322102	1	FITT.DK S-40 BULKHEAD
322106	1	FITT.DK S-40 BULKHEAD NUT
322133	1	FITT.DK S-40 PLUG W 1/8 THREAD
334225	1	FITT.DK S-40 STR.3/8'
334237	1	FITT.DK S-40 ELB.3/8'
334238	1	FITT.DK S-40 ELB.1/2'
334248	1	FITT.DK S-40 PLUG
334259	1	GASKET F. S-40 BULKHEAD
726462	1	FITT. S40 BULHEAD W. GASKET
726567	1	FITT.DK S-40 ELB.1/2" W.ORING
726693	1	FITT.DK S-40 PLUG 1/8BSP ORING

WWW.ROLTRONIK.PL

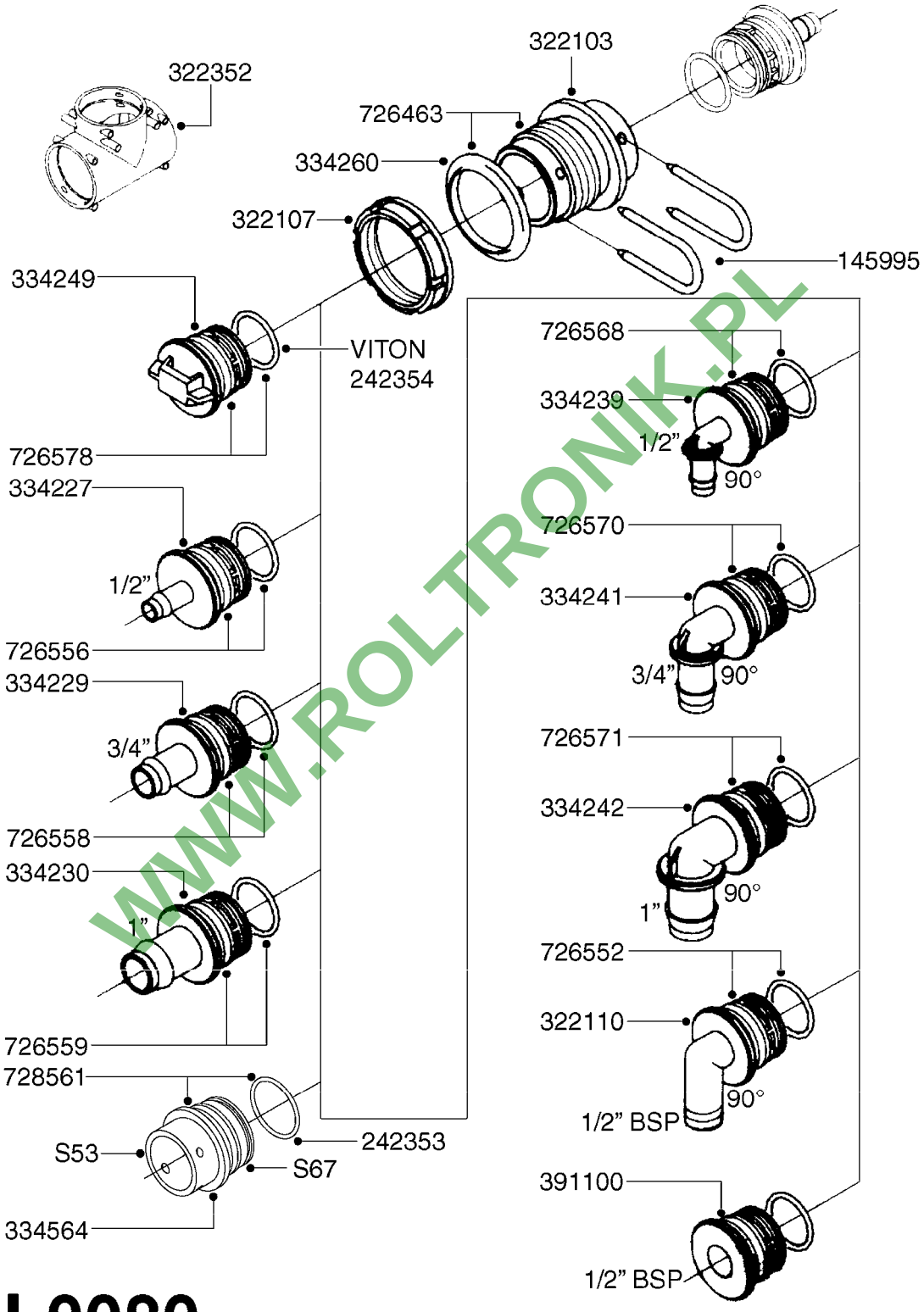

WWW.ROLTRONIK.PL

L0080

parts-nº	order qty	description
145995	1	FITT.DK S-53 FORK
242353	1	O-RING D44.2X3.0 VITON F.S-67
242354	1	O-RING D32.2X3.0 VITON F.S-53
322103	1	FITT.DK S-53 BULKHEAD
322107	1	FITT.DK S-53 BULKHEAD NUT
322110	1	FITT.DK S-53 ELB. 1/2" BSP
322352	1	FITT.DK S-53 TEE
334227	1	FITT.DK S-53 STR.1/2'
334229	1	FITT.DK S-53 STR.3/4"
334230	1	FITT.DK S-53 STR.1"
334239	1	FITT.DK S-53 ELB.1/2"
334241	1	FITT.DK S-53 ELB.3/4"
334242	1	FITT.DK S-53 ELB.1"
334249	1	FITT.DK S-53 PLUG
334260	1	GASKET F. S-53 BULKHEAD
334564	1	FITT.DK S-67 TO S-53 ADAPTER
391100	1	FITT.DK S-53THREAD INS.1/2"BSP
726463	1	FITT.DK S53 BULKHEAD W/GASKET
726552	1	FIT.DK S-53X90 1/2" BSP,O-RING
726556	1	FITT.DK S-53 HB 1/2" W/O-RING
726558	1	FITT.DK S53 STR. 3/4" W.ORING
726559	1	FITT DK. S-53 HB 1" W/O-RING
726568	1	FITT.DK.S-53 HB 1/2"90 W/ORING
726570	1	FITT.DK S-53 ELB.3/4" W.ORING
726571	1	FITT.DK S-53 ELB.1", W ORING
726578	1	FITT.DK S53 PLUG WITH O-RING
728561	1	FITT.DK. S67M - S53F REDUCER

WWW.ROLTRONIK.PL

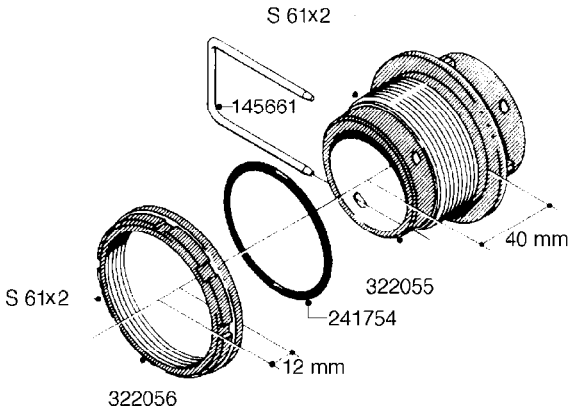

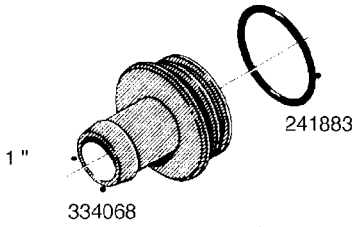

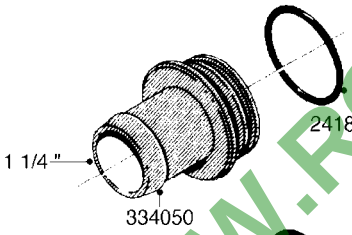

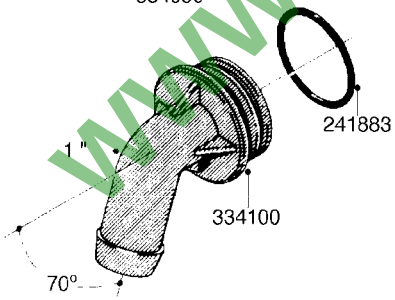

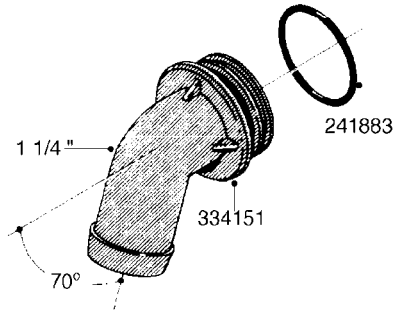

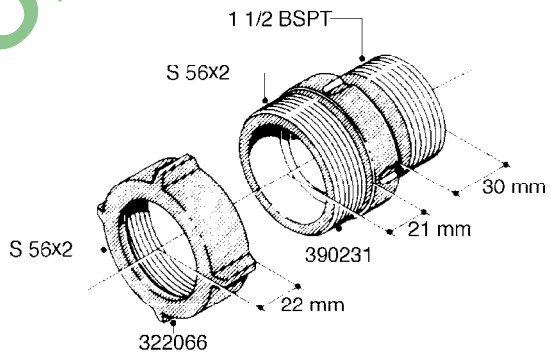

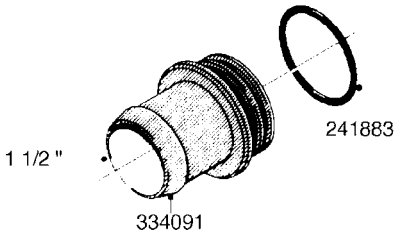

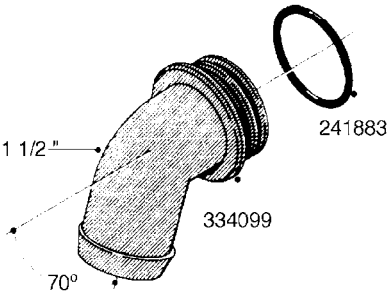

WWW.ROLTRONIK.PL

L0090

parts-nº	order qty	description
145661	1	FITT.DK S-61 FORK
241754	1	O-RING D59.5X3
241883	1	O-RING D39.2X3 NITRIL 242020
322055	1	FITT.DK S-61 BULKHEAD
322056	1	FITT.DK S-61 BULKHEAD NUT
322066	1	FITT.DK S-56 NUT
334050	1	FITT.DK S-61 STR.1-1/4"
334068	1	FITT.DK S-61 STR.1"
334091	1	FITT.DK S-61 STR.1-1/2'
334099	1	FITT.DK S-61 ELB.1-1/2"110 DEG
334100	1	FITT.DK S-61 ELB.1" 110 DEG.
334151	1	FITT.DK S-61 ELB.1-1/4"110 DEG
390231	1	FITT.DK NIPPLE 1-1/2 X S56

WWW.ROLTRONIK.PL

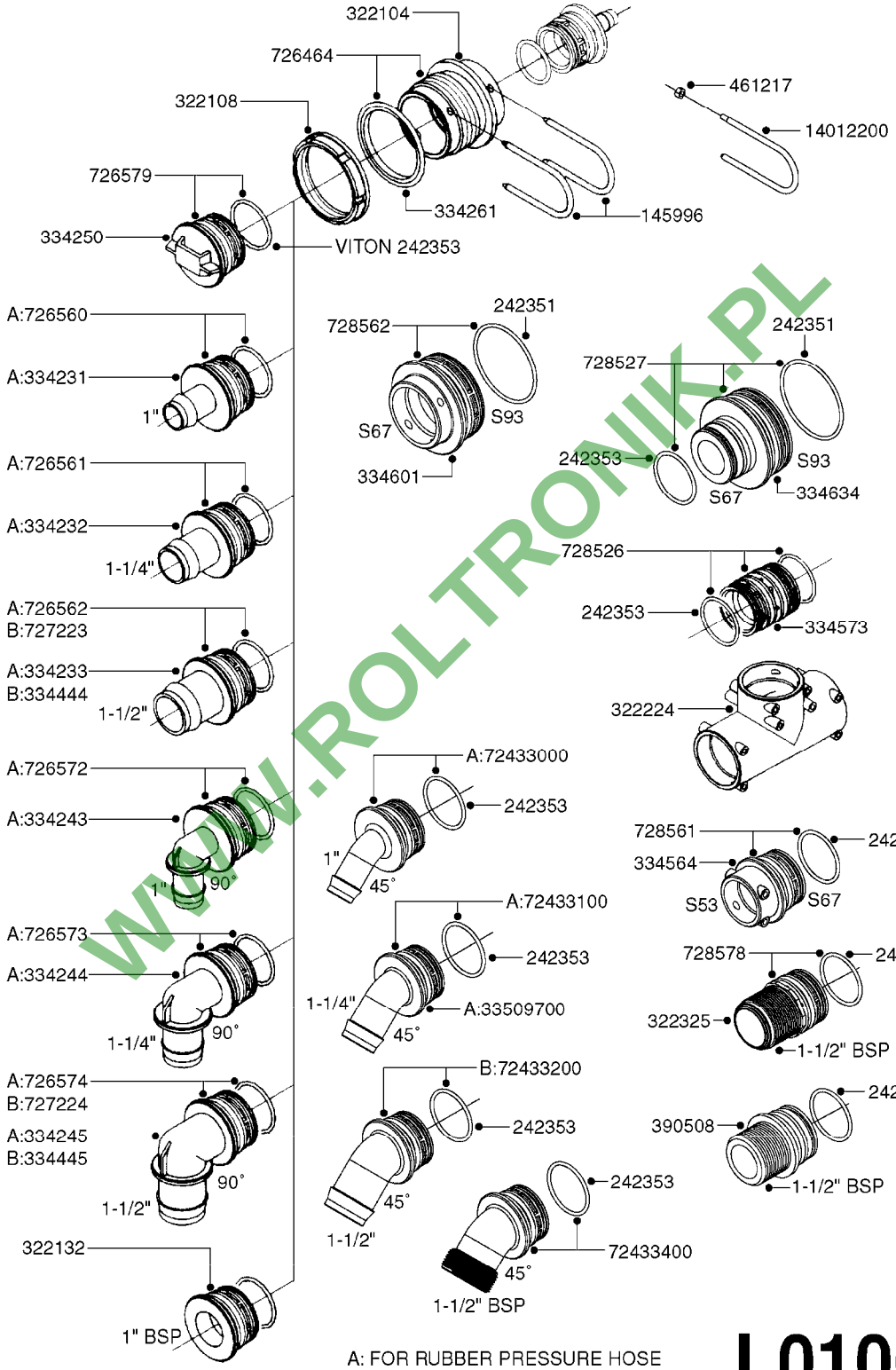

A: FOR RUBBER PRESSURE HOSE
B: FOR PVC SPIRAL HOSE

L0100

WWW.ROLTRONIK.PL

parts-n°	order qty	description
145996	1	FITT.DK S-67 FORK
242351	1	O-RING D69.5X3.0 VITON F.S-93
242353	1	O-RING D44.2X3.0 VITON F.S-67
322104	1	FITT.DK S-67 BULKHEAD
322108	1	FITT.DK S-67 BULKHEAD NUT
322132	1	FITT.DK S-67 THREAD INS.1'BSP
322224	1	FITT.DK S-67 TEE
322325	1	FITT.DK S-67 X 1-1/2"BSP LONG
334231	1	FITT.DK S-67 STR.1'
334232	1	FITT.DK S-67 STR.1-1/4'
334233	1	FITT.DK S-67 STR.1-1/2' RUBBER
334243	1	FITT.DK S-67 ELB.1"
334244	1	FITT.DK S-67 ELB.1-1/4"
334245	1	FITT.DK S-67 ELB. 1-1/2'RUBBER
334250	1	FITT.DK S-67 PLUG
334261	1	GASKET F. S-67 BULKHEAD
334444	1	FITT.DK S-67 STR.1-1/2" PVC
334445	1	FITT.DK S-67 ELB.1-1/2"
334564	1	FITT.DK S-67 TO S-53 ADAPTER
334573	1	FITT.DK S-67 CONNECTOR
334601	1	FITT.DK S-93 TO S67 ADAPTOR
334634	1	FITT.DK ADAPTER S-93M S67M
390508	1	FITT DK S67X1.5M BSPalt322325
461217	1	NUT HEX M5 LOCK
726464	1	FITT.DK S-67 BULKHEAD W/GASKET
726560	1	FITT.DK S-67 STR.1" W.O'RING
726561	1	FITT.DK S-67 STR.1-1/4" O'RING
726562	1	FITT.DK.S-67 HB 1-1/2"W.O-RING
726572	1	FITT.DK S-67 1" ELBOW 90 ASSY.
726573	1	FITT. S67 5/4" 90° W/O-RING
726574	1	FITT.DK S67X90,1.5HB PRESSURE
726579	1	FITT. S67 PLUG W/O-RING
727223	1	FITT.S67 1.5" STRAIT S W/ORING
727224	1	FITT.DK S67X90,1.5HB SUCTION
728526	1	FITT.DK S-67 CONNECT W. ORINGS
728527	1	ADAPTER S67M TO S93M W/ORING
728561	1	FITT.DK. S67M - S53F REDUCER
728562	1	FITT.DK S-93 TO S67 ADAPTOR
728578	1	FITT.DK S-67X1-1/2"BSP LG W/OR
14012200	1	FITT.DK S-67 FORK W/M5 THREADS
33509700	1	FITT.DK S-67 45° 1-1/4"
72433000	1	FITT.S67 1" 45° W/ORING
72433100	1	FITT.DK S-67 45° 1-1/4"W/ORING
72433200	1	FITT.S67 1-1/2" 45°PVC W/ORING
72433400	1	FITT.S67 1-1/2" 45°BSP W/ORING

WWW.PCL-TRONIK.PL

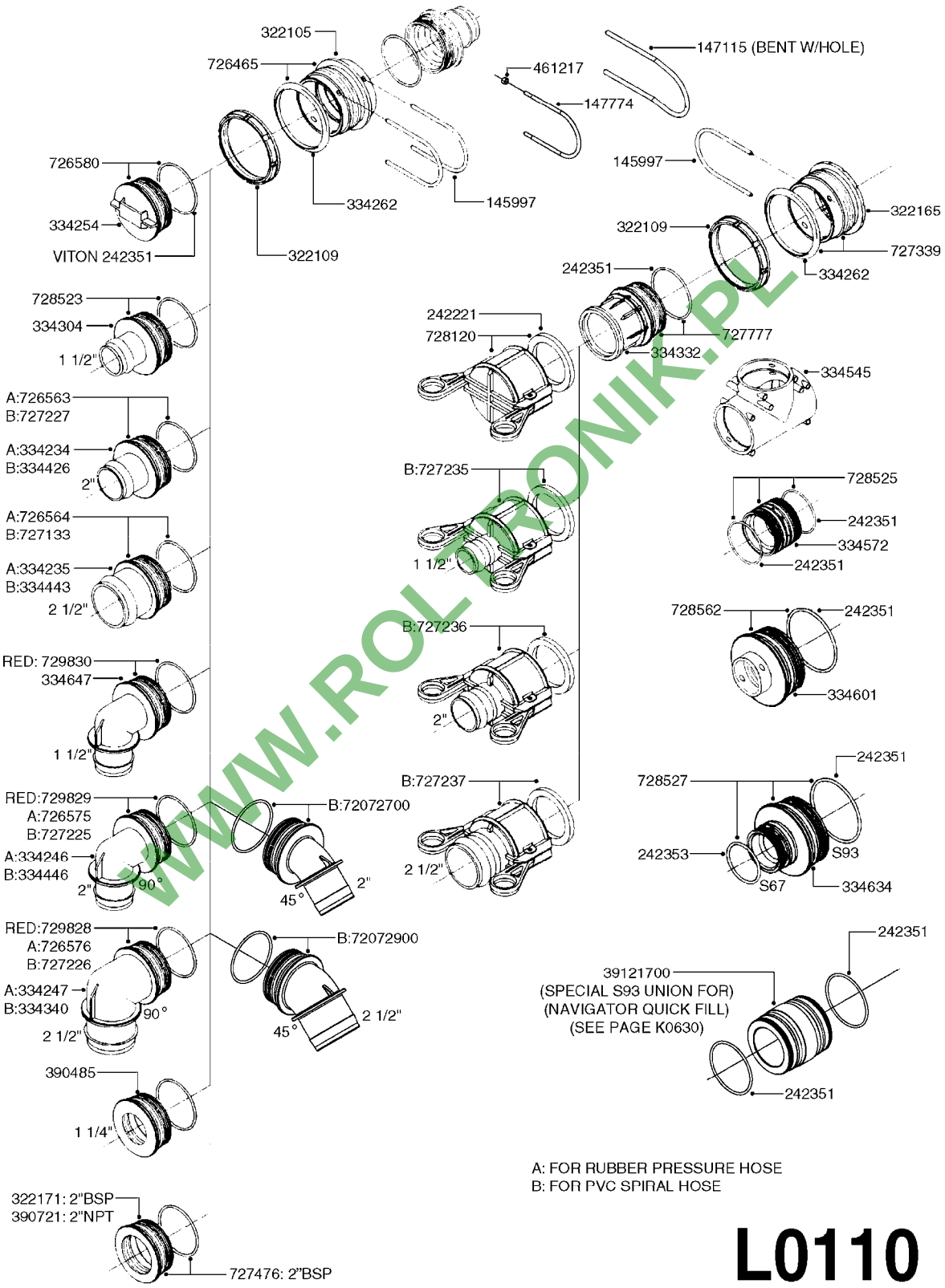

A: FOR RUBBER PRESSURE HOSE
B: FOR PVC SPIRAL HOSE

L0110

WWW.ROL-TRONIK.PL

parts-n°	order qty	description
145997	1	FITT.DK S-93 FORK
147115	1	FITT.DK S-93 FORK SPECIAL
147774	1	FITT.DK S-93 FORK W. M5 THREAD
242221	1	GASKET F. S-93 QUICK COUPLERS
242351	1	O-RING D69.5X3.0 VITON F.S-93
242353	1	O-RING D44.2X3.0 VITON F.S-67
322105	1	FITT.DK S-93 BULKHEAD DOUBLE
322109	1	FITT.DK S-93 BULKHEAD NUT
322165	1	FITT.DK S-93 BULKHEAD SINGLE
322171	1	FITT.DK S-93 THREAD INS.2"BSP
334234	1	FITT.DK S-93 STR.2" RUBBER
334235	1	FITT.DK S-93 STR.2-1/2'RUBBER
334246	1	FITT.DK S-93 ELB.2" PVC
334247	1	FITT.DK S-93 ELB.2-1/2'RUBBER
334254	1	FITT.DK S-93 PLUG
334262	1	GASKET F.S-93 BULKHEAD
334304	1	FITT.DK S-93 STR.1-1/2" PVC
334332	1	FITT.DK S-93 MALE QUICK COUP.
334340	1	FITT.DK S-93 ELBOW 2.5"
334426	1	FITT.DK S-93 STR.2'
334443	1	HOSE PIPE BR.21/2'-EVEN S
334446	1	FITT.DK S-93 ELB.2" PVC
334545	1	FITT.DK S-93 TEE
334572	1	FITT.DK S-93 ADAPTOR MALE MALE
334601	1	FITT.DK S-93 TO S67 ADAPTOR
334634	1	FITT.DK ADAPTER S-93M S67M
334647	1	FITT.DK S93 ELB 1-1/2" 90 PVC
390485	1	FITT.DK S-93 PLUG W D34 HOLE
390721	1	FITT.DK S-93 PLUG W/2'NPT THRE
461217	1	NUT HEX M5 LOCK
726465	1	FITT.DK S-93 BULKHEAD W/GASKET
726563	1	FITT.DK S-93 STR 2" W/O-RING
726564	1	HOSE TAIL 2 1/2' W.O-RING
726575	1	FITT.DK S-93 ELB. 2' RUBBER
726576	1	FITT. DK S-93 2 1/2" 90°
726580	1	FITT. S93 PLUG W/O-RING
727133	1	FITT. S93 2-1/2" STR. S W/O-RI
727225	1	FITT.DK S-93 ELB.2'PVC W/ORING
727226	1	FITT. S93 2-1/2" 90° S W/O-RIN
727227	1	FITT.DK S-93 STR.2' W/ORING
727235	1	QUICK COUPLER FEMALE W 1-1/2HB
727236	1	QUICK COUPLER FEMALE W 2'HB
727237	1	QUICK COUPLER FEMALE W2-1/2'HB
727339	1	FITT. S93 DRAIN BULKHEAD W/O-R
727476	1	FITT. DK S-93 2"FM THD W.ORING
727777	1	QUICK COUPLER S93 DRAIN W/O-RI
728120	1	QUICK COUPLER CAP F.S93 DRAIN
728523	1	FITT.DK S-93 STR.1-1/2"
728525	1	FITT. S93 CONNECTOR W/O-RINGS
728527	1	ADAPTER S67M TO S93M W/ORING
728562	1	FITT.DK S-93 TO S67 ADAPTOR
729828	1	FITT.DK S-93 ELB 2-1/2" RED
729829	1	FITT.DK S-93 ELB 2 RED
729830	1	FITT.DK S-93 ELB 1-1/2" 90 RED
39121700	1	FITT.DK S93 ADAP LG MALE MALE
72072700	1	FITT.DK S-93 45D 2" PVC
72072900	1	FITT.S93 2-1/2" 45°PVC W/ORING

WWW.ROTRONIK.PL

I.D.	PART # (ONE FOOT)	
3/8" 1/2" 3/4" 1" 1-1/4"	92701703 92702103 92703203 92712403 92734403	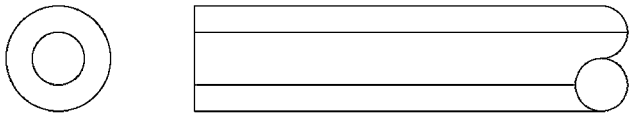 RUBBER HOSE SMOOTH, BLACK, TWO BLUE STRIPES
5/16" 3/8" 1/4" 1/2" 3/4"	927281 927284 927268 927269 927270	 PVC HOSE SHINY, BLACK, SMOOTH, TWO WHITE STRIPES
1" 1-1/4" 1-1/2" 2" 2-1/2"	92702403 92738900 92702603 92702703 92702803	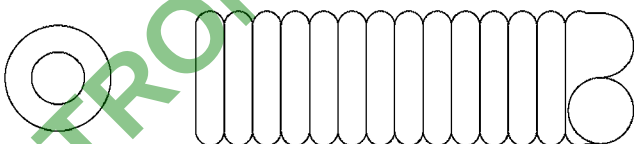 PVC SPIRAL SUCTION HOSE SHINY, RIBBED, GRAY
3/4"	927205	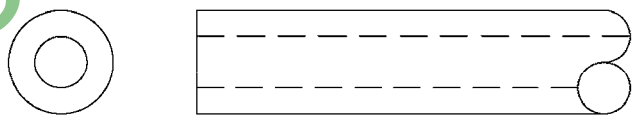 PVC HOSE CLEAR, SMOOTH
1/2" 3/4"	10631003 927231	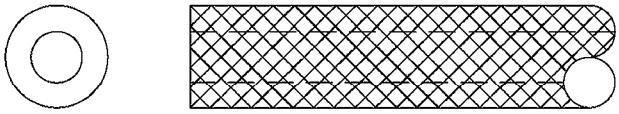 PVC HOSE SMOOTH, CLEAR, REINFORCED WITH WHITE MESH
4mm 6mm 8mm 10mm	927253 RED 927264 RED 927306 BLACK 927330 BLACK	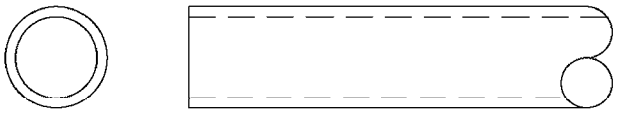 PVC AIR HOSE SMOOTH

WWW.ROLTRONIK.PL

L0120

BULK HOSE
L0120-HIN, 01:01:16

parts-n°	order qty	description
927205	1	HOSE R X CLEAR X 3/4 X 0012"
927231	1	HOSE R X PVCX3/4 CLR/BRD 0012"
927253	1	AIR HOSE, DIAMETER 4MM
927264	1	HOSE R X PE D6/D4 X 0012"
927268	1	HOSE R X PVC X 1/4 X 0012"
927269	1	HOSE R X PVC X 1/2 X 0012"
927270	1	HOSE R X PVC X 3/4 X 0012"
927281	1	HOSE R X PVC X 5/16 X 0012"
927284	1	HOSE 3/8 PVC W/ INSERT
927306	1	HOSE R X PE D8/D6 X 0012"BLACK
927330	1	HOSE R X PE D10/D8 X 012"BLACK
10631003	1	HOSE R X CLEAR BRAID.X 1/2 12"
92701703	1	HOSE R X3/8" X300PSI WP X0012"
92702103	1	HOSE R X1/2" X300PSI WP X0012"
92702403	1	HOSE PVC SUCT GRAY 1"
92702603	1	HOSE PVC SUCT GRAY 1-1/2"
92702703	1	HOSE PVC SUCT GRAY 2"
92702803	1	HOSE PVC SUCT GRAY 2.5"
92703203	1	HOSE R X3/4" X300PSI WP X0012"
92712403	1	HOSE R X1" X300PSI WP X0012"
92734403	1	HOSE R X5/4" X200PSI WP X0012"
92738900	1	HOSE R X PVC X 1-1/4" 0012"

WWW.ROLTRONIK.PL

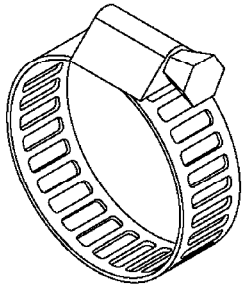

1-1/2" OR SMALLER CLAMPS

Hose Size	Pressure	Suction	Clamp Code
3/8"	28029803		6706
1/2"	28029803		6706
3/4"	28029903		6712
1"	28030003	28029903	6716
1-1/4"	28030103		6724
1-1/2"		28030103	6724
2"		28030203	235-67
2-1/2"		28030303	235-74
3"		28030403	235-82

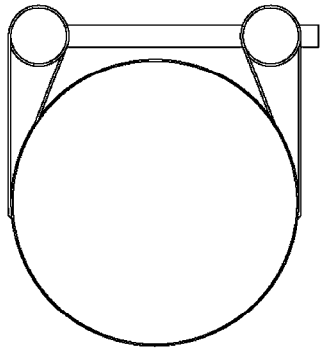

2" OR LARGER CLAMPS

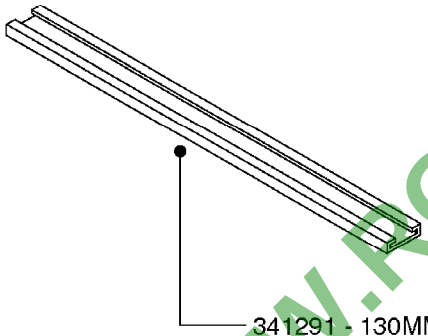

341291 - 130MM
341292 - 180MM
341301 - 230MM

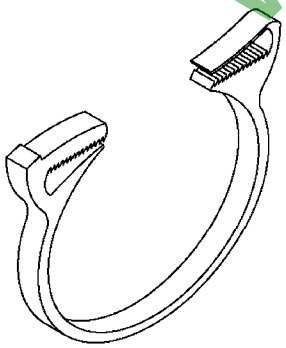

5/16" - 334686
3/8" - 334533
1/2" - 334534
3/4" - 334531
1" - 334680

WWW.ROLTRONIK.PL

L0130

HOSE CLAMPS
L0130-HIN, 01:01:16

Date 16.03.2016 13:55

parts-n°	order qty	description
334531	1	CLAMP HOSE PLASTIC 3/4"
334533	1	CLAMP HOSE PLASTIC 3/8"
334534	1	CLAMP HOSE PLASTIC 1/2"
334680	1	CLAMP HOSE PLASTIC 1"
334686	1	CLAMP HOSE PLASTIC 5/16'
341291	1	RUBBER HOSE CLAMP COVER 130MM
341292	1	RUBBER HOSE CLAMP COVER 180MM
341301	1	RUBBER HOSE CLAMP COVER 230MM
28029803	1	CLAMP HOSE GEAR P1/2" 6708
28029903	1	CLAMP HOSE GEAR P3/4"-S1" 6712
28030003	1	CLAMP HOSE GEAR P1" 6716
28030103	1	CLAMP HOSE GEAR P5/4-S1.5"6724
28030203	1	CLAMP HOSE T-BOLT S2" 235-67
28030303	1	CLAMP HOSE T-BOLT S2.5" 235-76
28030403	1	CLAMP HOSE T-BOLT S3" 235-82

WWW.ROLTRONIK.PL

HARDI	**Agroparts: www.HARDI-INTERNATIONAL.com**	
	BOOM AND WORKING LIGHT KIT M0010-HIN, 01:01:16	Page 0 Date 16.03.2016 13:55

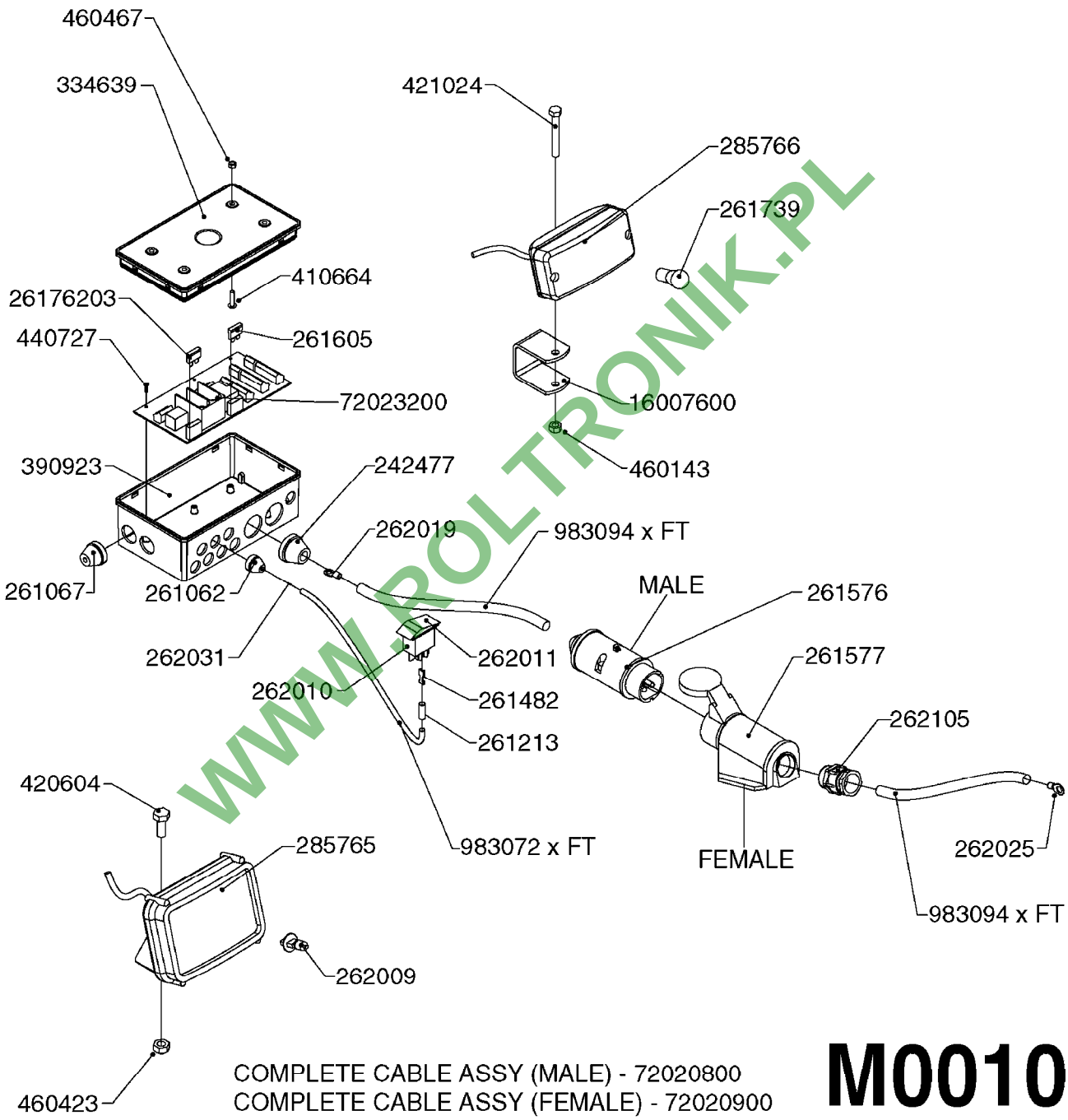

COMPLETE CABLE ASSY (MALE) - 72020800
COMPLETE CABLE ASSY (FEMALE) - 72020900

M0010

WWW.ROLTRONIK.PL

parts-nº	order qty	description
242477	1	GROMMET 14-20 GREY
261062	1	GROMMET
261067	1	GROMMET 10-14 GREY
261213	1	WIRE 6.4MM BLACK
261482	1	SPADE TERMINAL 6.3X.8 1.0-2.5m
261576	1	PLUG ELEC.2 POLE MALE F.PILOT
261577	1	PLUG ELEC.2 POLE FEMALE- PILOT
261605	1	FUSE 25A F. HP3050
261739	1	BULB 12V 21W REPALCEMENT
262009	1	BULB 12V/55W HVID REPLACEMENT
262010	1	SWITCH, 1 TERMINAL
262011	1	RED TOGGLE F. SWITCH 262010
262019	1	RING TERMINAL 10MM 2X6
262025	1	RING TERMINAL 10MM2 08
262031	1	RING TERMINAL 0.75MM 2
262105	1	PLUG CASE M25X1.5 11-18 GRAY
285765	1	BOOM LIGHT
285766	1	SERVICE WORK LIGHT
334639	1	COVER F.EC PLASTIC BOX -LOWER
390923	1	PLASTIC BOX ELECTRICAL
410664	1	BOLT HEX M5 X 20
420604	1	BOLT HEX 8.8 DEL M10X25 FT DIN933
421024	1	BOLT HEX 8.8 DEL M8X60
440727	1	SCREW F. PLASTIC 3X10 SS
460143	1	NUT HEX M8 LOCK A2 DIN985
460423	1	NUT HEX M10X1.5 LOCK
460467	1	NUT HEX M5 GALV.
983072	1	ELEC. CABLE 3 WIRE X 0.75MM
983094	1	CABLE 10MM2 X 12"
16007600	1	BRACKET F. WORK LIGHT CM+
26176203	1	FUSE 5.0A QUICK-ACT.
72020800	1	CABLE 2X10MM2/MALE PLUG L=4500
72020900	1	CABLE 2X10MM2/FEM. PLUG L=5000
72023200	1	BOARD FOR FIELD LIGHTS

WWW.POLTRONIK.PL

HARDI	**Agroparts: www.HARDI-INTERNATIONAL.com**	
	BOOM AND WORKING LIGHT KIT 09 M0020-HIN, 01:01:16	Page 0 Date 16.03.2016 13:55

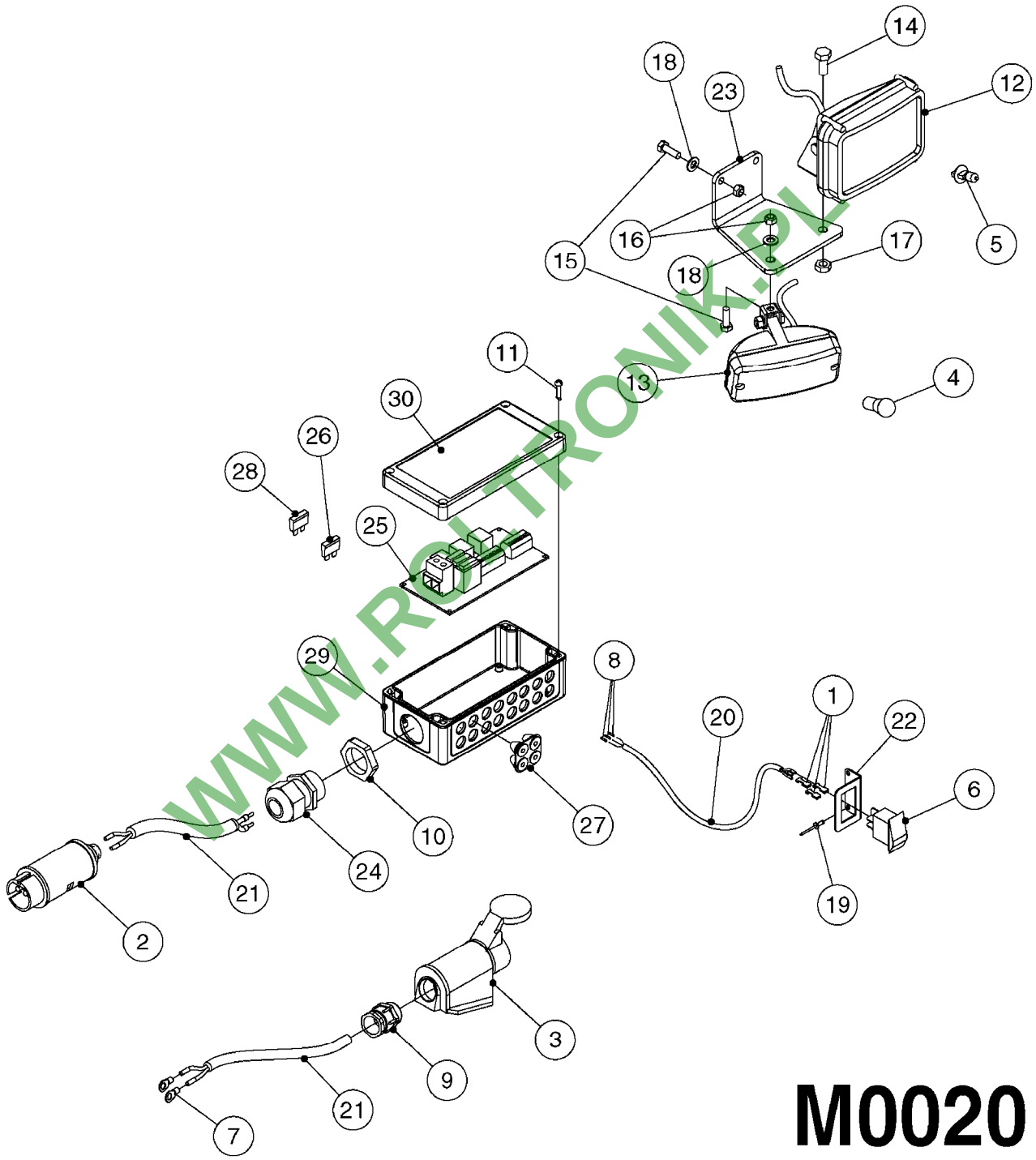

WWW.ROLTRONIK.PL

M0020

BOOM AND WORKING LIGHT KIT 09
M0020-HIN, 01:01:16

Date 16.03.2016 13:55

Pos.	parts-n°	order qty	description
1	261482	1	SPADE TERMINAL 6.3X.8 1.0-2.5m
2	261576	1	PLUG ELEC.2 POLE MALE F.PILOT
3	261577	1	PLUG ELEC.2 POLE FEMALE- PILOT
4	261739	1	BULB 12V 21W REPALCEMENT
5	262009	1	BULB 12V/55W HVID REPLACEMENT
6	262010	1	SWITCH, 1 TERMINAL
7	262025	1	RING TERMINAL 10MM2 08
8	262031	1	RING TERMINAL 0.75MM 2
9	262105	1	PLUG CASE M25X1.5 11-18 GRAY
10	262107	1	NUT F. BULKHEAD CABLE BLACK
11	280258	1	SCREW F. BOX LID 1/4" L=18
12	285765	1	BOOM LIGHT
13	285766	1	SERVICE WORK LIGHT
14	420604	1	BOLT HEX 8.8 DEL M10X25 FT DIN933
15	421046	1	BOLT HEX 8.8 DEL M8X25 FT A2 DIN933
16	460143	1	NUT HEX M8 LOCK A2 DIN985
17	460423	1	NUT HEX M10X1.5 LOCK
18	471126	1	WASHER, M8, Ø16/ 8.4X 1.6, SS
19	480804	1	RIVET Ø4.8x14.5
20	983072	1	ELEC. CABLE 3 WIRE X 0.75MM
21	983094	1	CABLE 10MM2 X 12"
22	16129600	1	MOUNT PLATE SWITCH WORKING LHT
23	16142400	1	BRACKET FOR LIGHTS NCM
24	26022800	1	BULKHEAD F. CABLE 15-18 BLACK
25	26024500	1	WORK LIGHT PCB 07
26	26176203	1	FUSE 5.0A QUICK-ACT.
27	28048200	1	WIRE GROMET RUBBER 4 HOLE
28	28048600	1	FUSE AUTO 15 AMP.
29	33508700	1	BOX BOTTOM 160X80X40 BLACK 1-HOLE
30	33508800	1	LID 160X80X15 BLK W/SCREWS

WWW.ROLTRONIK.PL

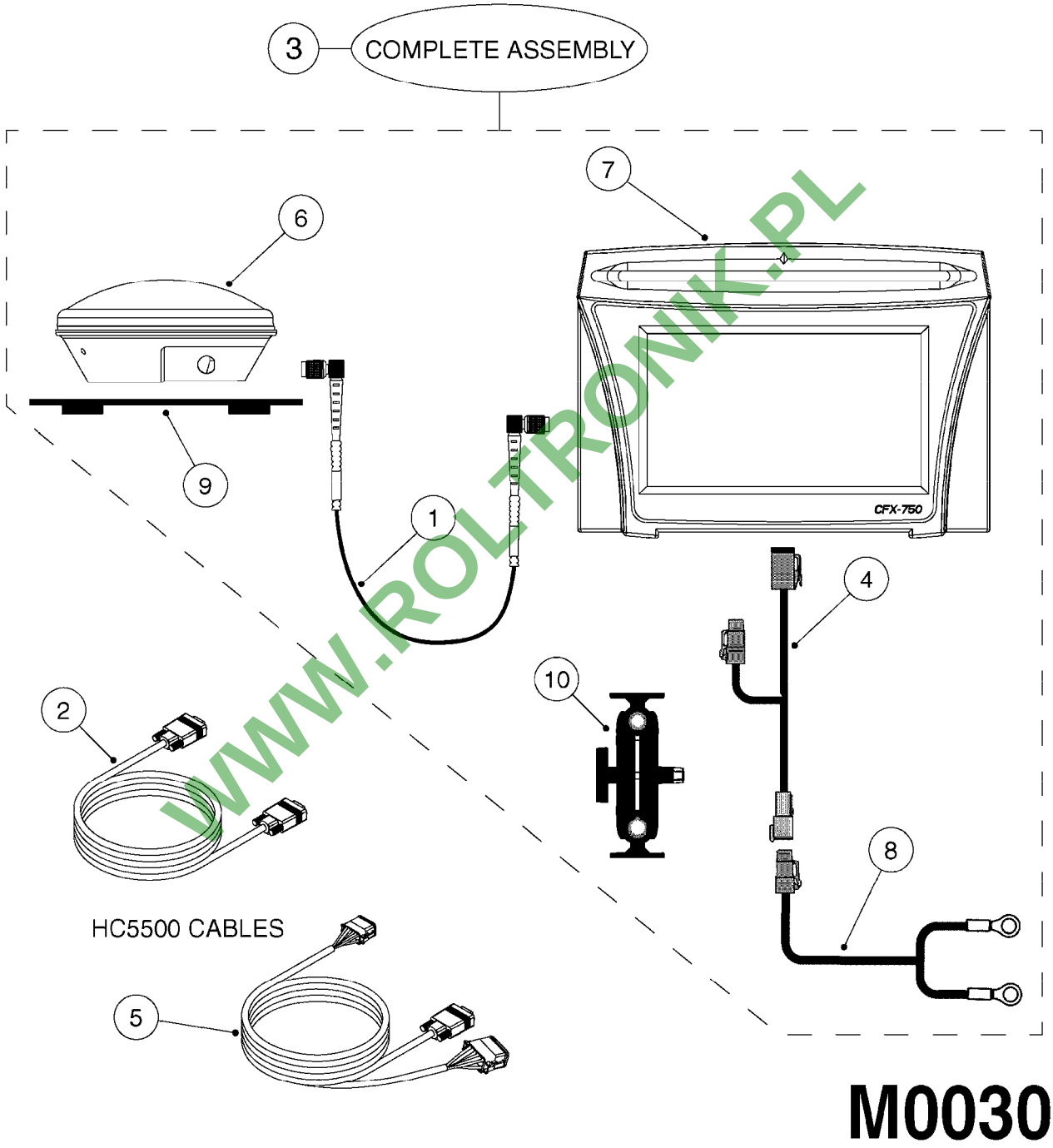

WWW.ROLTRONIK.PL

M0030

CFX-750 DISPLAY, DGPS
M0030-HIN, 01:01:16

Pos.	parts-n°	order qty	description
1	26007603	1	CABLE, ANTENNA, EZGUIDEPLUS
2	26012003	1	NULL MODEM CABLE
3	26021403	1	CFX-750 DISPLAY, DGPS
4	26021603	1	CABLE, POWER BUS, CAN CFX-750
5	26021703	1	CABLE, ASC INTERFACE, CFX-750
6	26021803	1	AG-25 ANTENNA L1/L2 GLN
7	26022103	1	CFX-750 DISPLAY ONLY
8	26022603	1	CFX-750 Basic Power Cable
9	28048203	1	EZ-GUIDE 500 MOUNT F.AG15 ANT.
10	28048303	1	EZ-GUIDE 250/500 RAM MNT.1.5"

WWW.ROLTRONIK.PL

EZ-GUIDE PLUS LIGHT BAR
M0040-HIN, 01:01:16

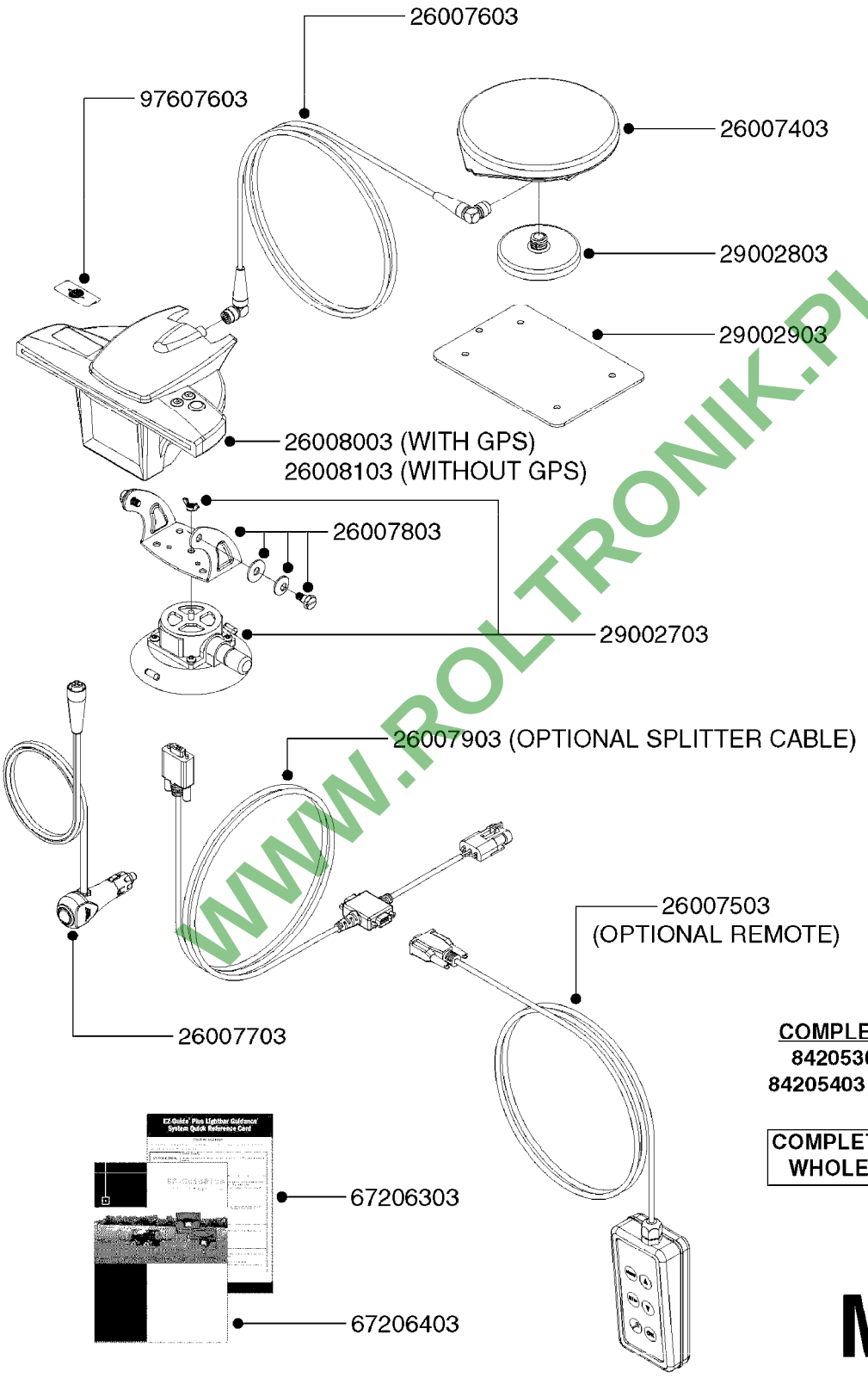

WWW.ROLTRONIK.PL

COMPLETE ASSEMBLY:
84205303 (WITH GPS)
84205403 (WITHOUT GPS)

COMPLETE ASSEMBLIES WHOLEGOODS ITEMS

M0040

EZ-GUIDE PLUS LIGHT BAR
M0040-HIN, 01:01:16

Date 16.03.2016 13:55

parts-n°	order qty	description
26007403	1	ANTENNA,HURRICANE F. EZGUIDEPL
26007503	1	REMOTE KEYPAD EZ-GUIDE PLUS
26007603	1	CABLE, ANTENNA, EZGUIDEPLUS
26007703	1	CABLE, POWER F. EZGUIDEPLUS
26007803	1	BRACKET KIT F. EZGUIDEPLUS
26007903	1	EZ-Guide 500 External Interfac
26008003	1	LIGHT BAR ASSM WITH GPS
26008103	1	LIGHT BAR ASSM WITHOUT GPS
29002703	1	VACUUM CUP 4 1/2" 1420I
29002803	1	MOUNT, MAG F. ANTENNA
29002903	1	PLATE, F. ANTENNA MOUNT
67206303	1	QUICK REFERENCE CARD EZ-GUIDE+
67206403	1	MANUAL EZ GUIDE PLUS
84205303	1	EZ GUIDE PLUS W GPS, NO LABLE
84205403	1	EZ GUIDE PLUS W/O GPS,NO LABLE
97607603	1	DECAL COMPANY 45MM X 20MM

WWW.ROLTRONIK.PL

EZ-STEER STEERING SYSTEM
M0050-HIN, 01:01:16

Page 0

Date 16.03.2016 13:55

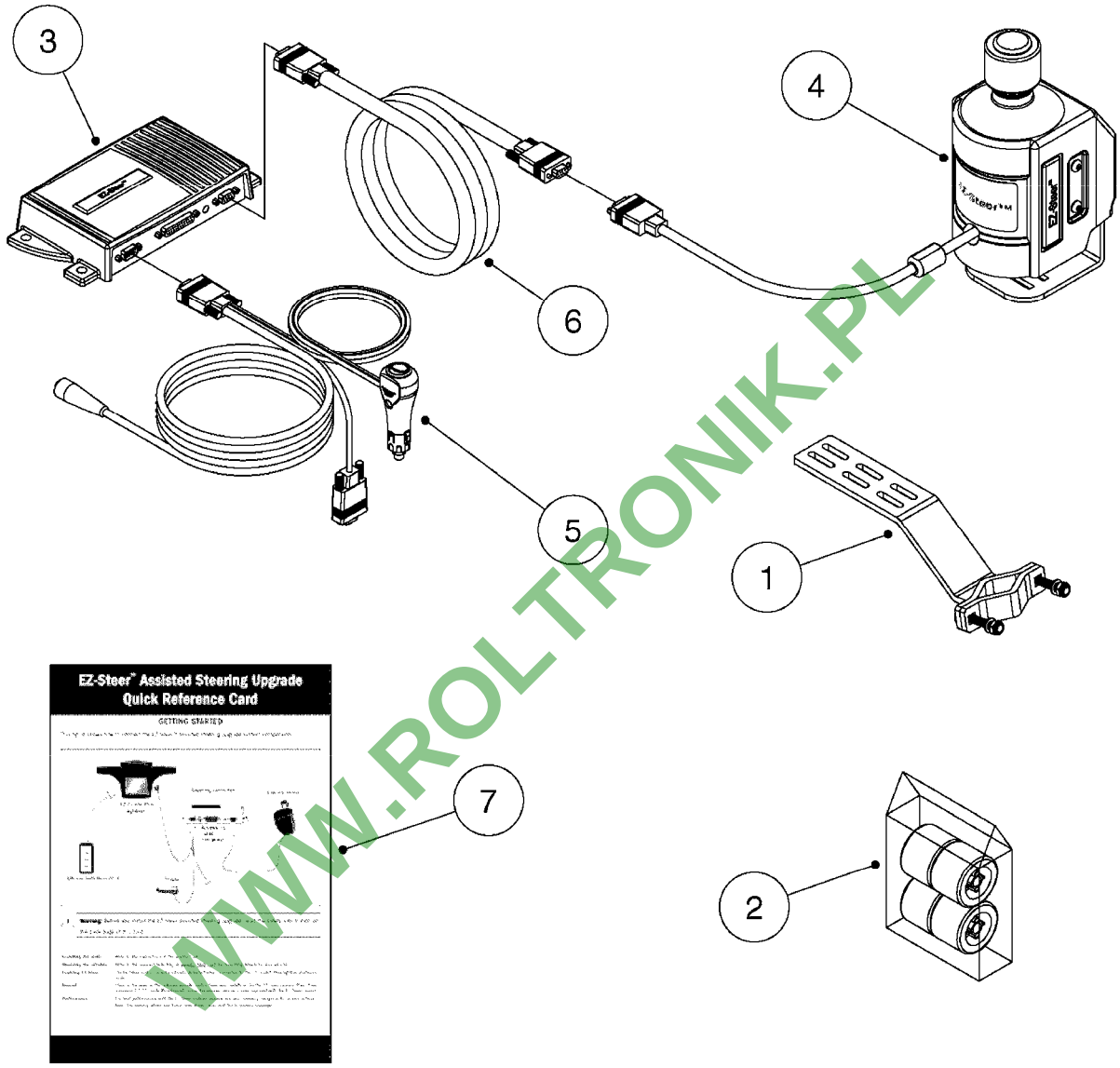

COMPLETE ASSEMBLY 8

COMPLETE ASSEMBLIES
WHOLEGOODS ITEMS

M0050

WWW.ROLTRONIK.PL

Pos.	parts-n°	order qty	description
1	26008803	1	EZ-STR.BKT-JD 4000,8000 4WD
1	26008903	1	EZ-STR.BKT-JD80002WD,7X20,9000
1	26009003	1	EZ-STR.BKT-CASE IH 7100/7200
1	26009103	1	EZ-STR.BKT-JD COMBINE&ROGATOR
1	26009203	1	EZ-STR.BKT-JD 6000,7000
1	26009303	1	EZ-STR.BKT-BUHLER,NH VERSATILE
1	26009403	1	EZ-STR.BKT-STEIGER,NH VERSATIL
1	26009503	1	EZ-STR.BKT-INTERNATIONAL TRUCK
1	26009603	1	EZ-STR.BKT-AGCHEM TERRAGATOR
1	26009703	1	EZ-STR.BKT-CASE IH MXM
1	28036903	1	EZ-STR.BKT-CASE IH COMB.1600
1	28037003	1	EZ-STR.BKT-JD 89XX,71XX,72XX
1	28037103	1	EZ-STR.BKT-JD 8000/9000
1	28037203	1	EZ-STR.T2 TERRAIN COMP.UPDATE
1	28037303	1	EZ-STR.BKT-SPR.COUPE 3000/4000
1	28038203	1	EZ-STR.BKT-FENDT 924
1	28046503	1	EZ-STR.BKT-AGCO DT/RT,MF64/74
1	28047803	1	EZ-STR.BKT.-NH TVT,CASE IH CVX
1	28050203	1	EZ-STR.BKT-CASE JX(U),NH TL(A)
1	28055203	1	EZ-STR.BKT-CASE MXM/N.HOLLAND
1	28055903	1	EZ-STR.BKT-WILMAR EAGLE
2	26009803	1	EZ-STEER FOAM WHEELS 4-PK
3	26009903	1	EZ-STEER CONTROLLER
4	26010003	1	EZ-STEER MOTOR KIT
5	26010103	1	EZ-STEER POWER CABLE
6	26010203	1	EZ-STEER MOTOR CABLE 3M
7	67210803	1	QUICK REFERENCE CARD EZ-STEER
8	84205503	1	EZ-STEER SYSTEM COMPLETE

WWW.ROLTRONIK.PL

EZ-GUIDE 500 LIGHTBAR
M0060-HIN, 01:01:16

Page 0

Date 16.03.2016 13:55

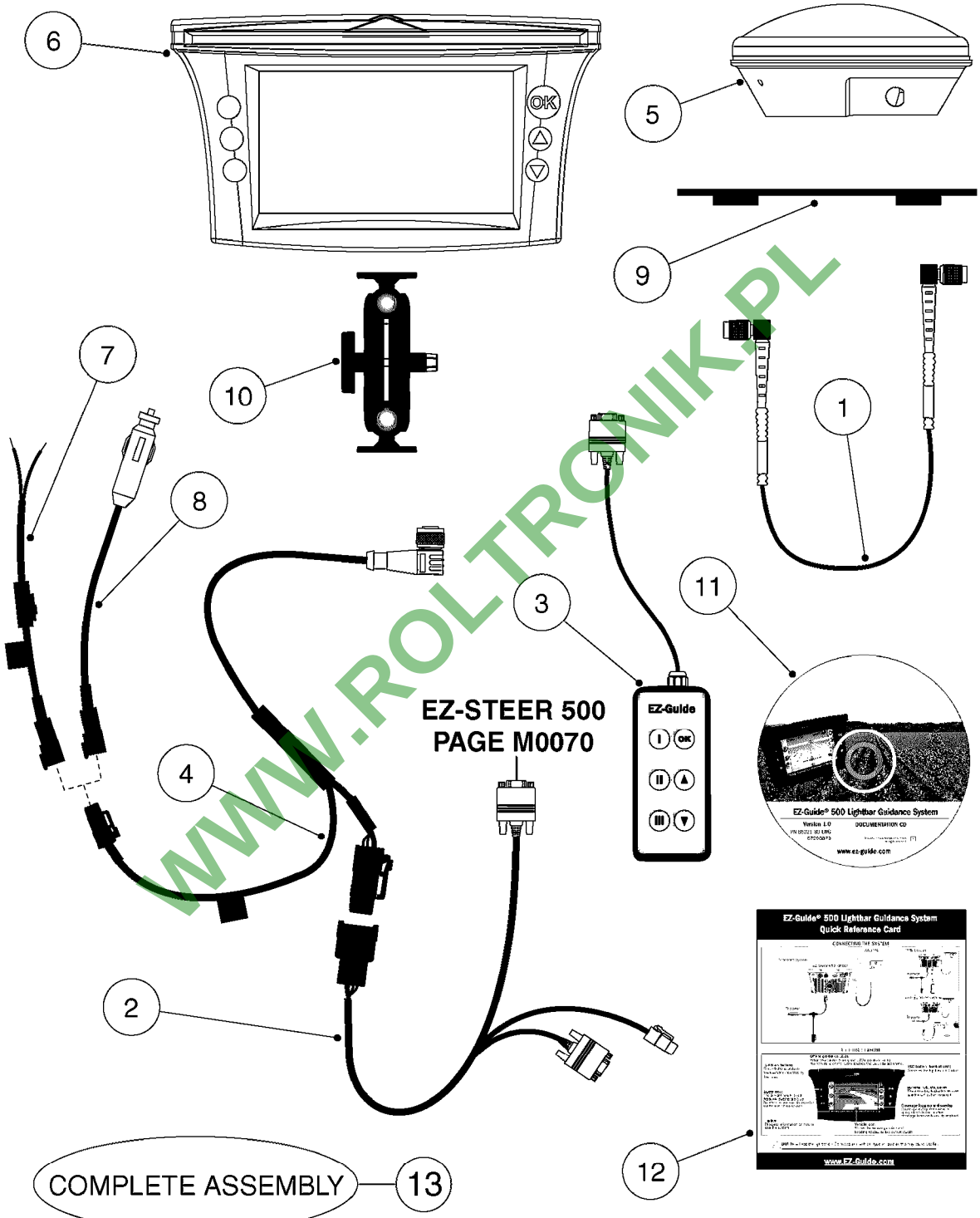

WWW.ROLTRONIK.PL

COMPLETE ASSEMBLIES
WHOLEGOODS ITEMS

M0060

EZ-GUIDE 500 LIGHTBAR
M0060-HIN, 01:01:16

Pos.	parts-n°	order qty	description
1	26007603	1	CABLE, ANTENNA, EZGUIDEPLUS
2	26012203	1	EZ-STEER/GUIDE 500 ADAPT.CABLE
3	26015303	1	REMOTE KEYPAD EZGUIDE 500/250
3	28048403	1	DECAL - REMOTE OVERLAY 500/250
4	26015403	1	EZ-GUIDE 500 CABLE POWER/CAN90
5	26015503	1	EZ-GUIDE 500 Z PLUS ANTENNA
5	26015603	1	ANTENNA AG15 L1,EZ GDE 500/250
6	26015703	1	EZ-GUIDE 500 DGPS DISPLAY
6	26015803	1	EZ-GUIDE 500 OMNISTAR DISPLAY
7	26016103	1	EZ-GUIDE 500 CABLE UNTERM.FUSE
8	26016203	1	EZ-GUIDE 500 POWER CONN.CABLE
9	28048203	1	EZ-GUIDE 500 MOUNT F.AG15 ANT.
10	28048303	1	EZ-GUIDE 250/500 RAM MNT.1.5"
11	29003803	1	EZ-GUIDE 500 CD,GET.STARTED V1
12	67215403	1	EZ-GUIDE 500 QUICK REF.CARD V1
13	84208303	1	EZ GUIDE 500 LIGHTBAR (DGPS)
13	84208403	1	EZ GUIDE 500 LIGHTBAR (XP/HP)
13	84208503	1	EZ GUIDE 500 LIGHTBAR (RTK)

WWW.ROLTRONIK.PL

EZ-STEER 500 STEERING SYSTEM
M0070-HIN, 01:01:16

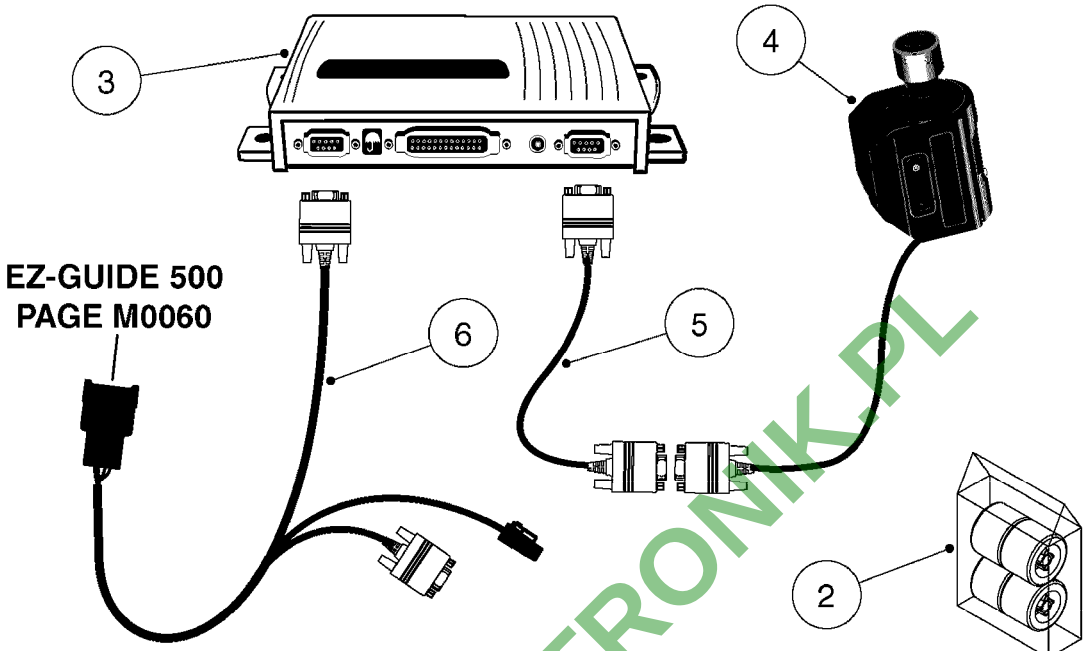

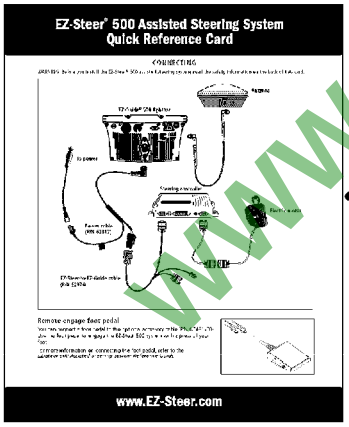

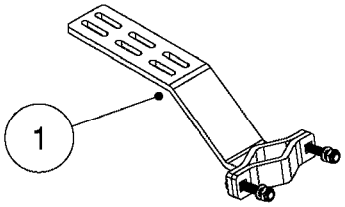

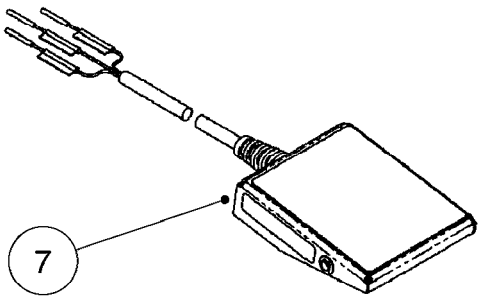

COMPLETE ASSEMBLY 9

COMPLETE ASSEMBLIES
WHOLEGOODS ITEMS

M0070

WWW.ROLTRONIK.PL

Pos.	parts-n°	order qty	description
1	26008803	1	EZ-STR.BKT-JD 4000,8000 4WD
1	26008903	1	EZ-STR.BKT-JD80002WD,7X20,9000
1	26009003	1	EZ-STR.BKT-CASE IH 7100/7200
1	26009103	1	EZ-STR.BKT-JD COMBINE&ROGATOR
1	26009203	1	EZ-STR.BKT-JD 6000,7000
1	26009303	1	EZ-STR.BKT-BUHLER,NH VERSATILE
1	26009403	1	EZ-STR.BKT-STEIGER,NH VERSATIL
1	26009503	1	EZ-STR.BKT-INTERNATIONAL TRUCK
1	26009603	1	EZ-STR.BKT-AGCHEM TERRAGATOR
1	26009703	1	EZ-STR.BKT-CASE IH MXM
1	28036903	1	EZ-STR.BKT-CASE IH COMB.1600
1	28037003	1	EZ-STR.BKT-JD 89XX,71XX,72XX
1	28037103	1	EZ-STR.BKT-JD 8000/9000
1	28037203	1	EZ-STR.T2 TERRAIN COMP.UPDATE
1	28037303	1	EZ-STR.BKT-SPR.COUPE 3000/4000
1	28038203	1	EZ-STR.BKT-FENDT 924
1	28046503	1	EZ-STR.BKT-AGCO DT/RT,MF64/74
1	28047803	1	EZ-STR.BKT.-NH TVT,CASE IH CVX
1	28050203	1	EZ-STR.BKT-CASE JX(U),NH TL(A)
1	28055203	1	EZ-STR.BKT-CASE MXM/N.HOLLAND
1	28055903	1	EZ-STR.BKT-WILMAR EAGLE
2	26009803	1	EZ-STEER FOAM WHEELS 4-PK
3	26009903	1	EZ-STEER CONTROLLER
4	26010003	1	EZ-STEER MOTOR KIT
5	26010203	1	EZ-STEER MOTOR CABLE 3M
6	26012203	1	EZ-STEER/GUIDE 500 ADAPT.CABLE
7	26012503	1	EZ-STR.FOOT SWITCH & ACC.CABLE
8	67214803	1	EZ-STR.REF.GUIDE V3 SPARE
8	67214903	1	EZ-STEER QUICK REF.CARD V3
8	67215203	1	EZ-STEER 500 QUICK REF.CARD V1
8	67215303	1	MANUAL EZ-STEER 500 REF V1
9	84208603	1	EZ-STEER 500/250 SYS. COMPLETE

WWW.PODTRAK.PL

EZ-GUIDE 250 LIGHTBAR
M0080-HIN, 01:01:16

Page 0

Date 16.03.2016 13:55

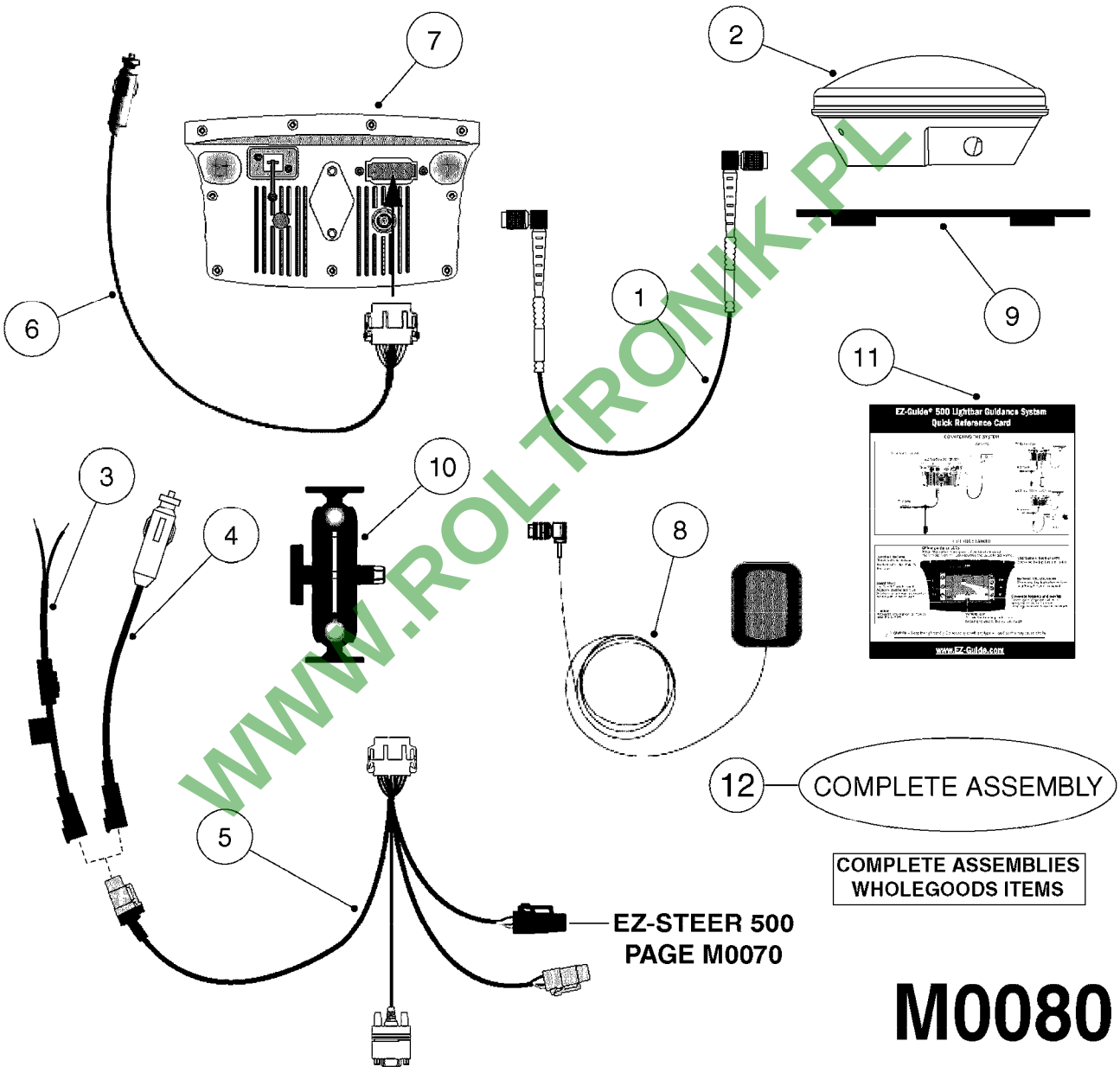

COMPLETE ASSEMBLIES
WHOLEGOODS ITEMS

M0080

WWW.ROLTRONIK.PL

EZ-GUIDE 250 LIGHTBAR
M0080-HIN, 01:01:16

Date 16.03.2016 13:55

Pos.	parts-n°	order qty	description
1	26007603	1	CABLE, ANTENNA, EZGUIDEPLUS
2	26015603	1	ANTENNA AG15 L1,EZ GDE 500/250
3	26016103	1	EZ-GUIDE 500 CABLE UNTERM.FUSE
4	26016203	1	EZ-GUIDE 500 POWER CONN.CABLE
5	26017303	1	EZ-GUIDE 250 ALL PORT CABLE
6	26017703	1	EZ-GUIDE 250 POWER CABLE
7	26017803	1	EZ-GUIDE 250 LIGHTBAR DISPLAY
8	26017903	1	EZ-GUIDE 250 PATCH ANTENNA
9	28048203	1	EZ-GUIDE 500 MOUNT F.AG15 ANT.
10	28048303	1	EZ-GUIDE 250/500 RAM MNT.1.5"
11	67217403	1	EZ-GUIDE 250 QUICK REF.CARD
12	84210603	1	EZ GUIDE 250 LIGHTBAR

WWW.ROLTRONIK.PL

HARDI	**Agroparts: www.HARDI-INTERNATIONAL.com**	
	COMMON SENSORS AND BRACKETS M0130-HIN, 01:01:16	Page 0 Date 16.03.2016 13:55

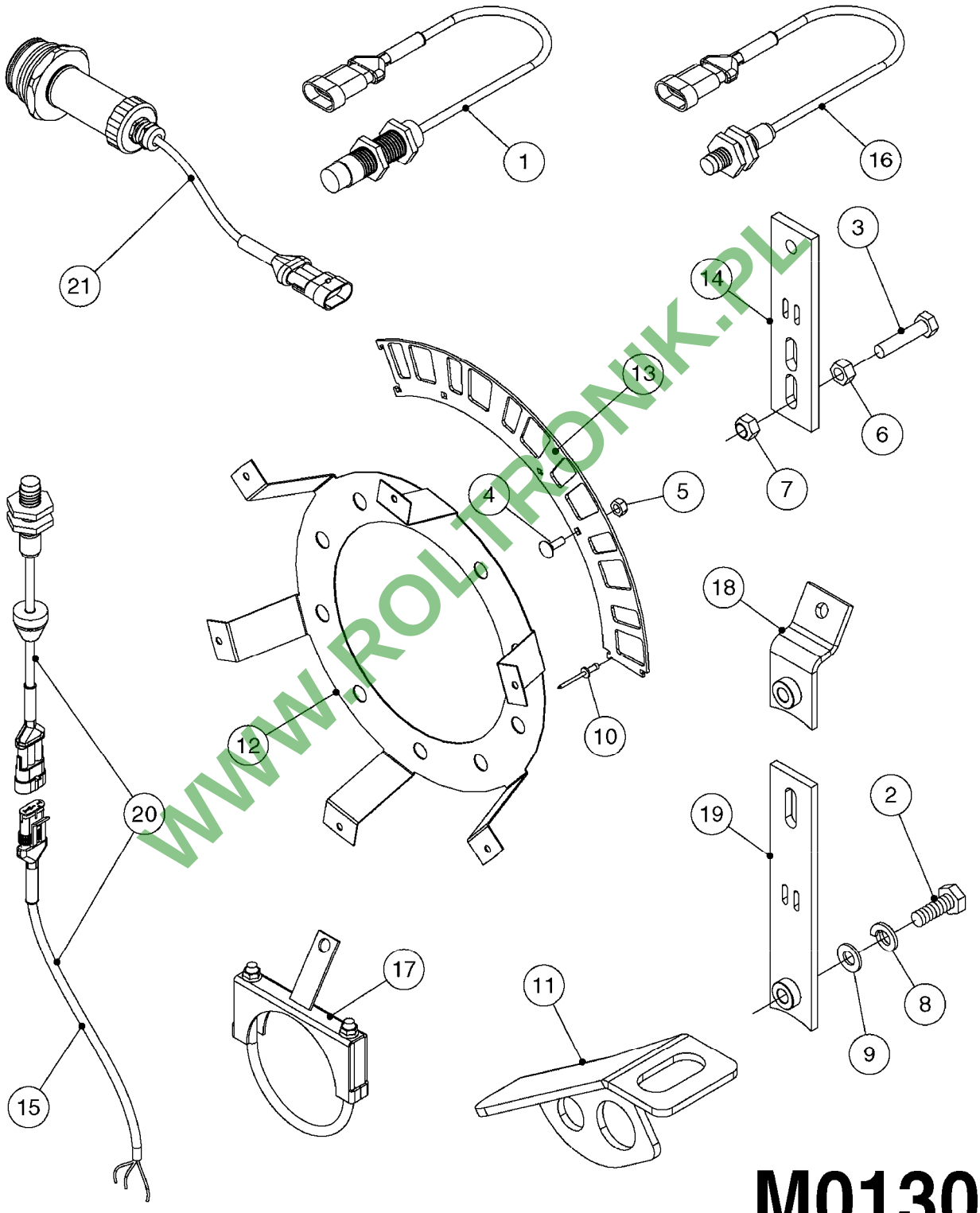

WWW.ROLTRONIK.PL

M0130

Pos.	parts-n°	order qty	description
1	285855	1	SENSOR INDUCTIVE M18 W/WIRE
2	430286	1	BOLT HEX 8.8 DEL M12X30 FT
3	430870	1	BOLT HEX 8.8 DEL M12X55 FT
4	440695	1	BOLT CARRIAGE M8X25
5	460143	1	NUT HEX M8 LOCK A2 DIN985
6	460386	1	NUT HEX M12X1.75
7	460703	1	NUT HEX M12X1.75 LOCK DIN985
8	470466	1	WASHER D21.1/D12.2X2.5 LOCK
9	471127	1	WASHER, M12, Ø24/13.0X 2.5, SS
10	480804	1	RIVET Ø4.8x14.5
11	16020300	1	BRACKET FOR SPEED SENSOR
12	16094703	1	WHEEL SENSOR MT BKT
13	16138203	1	SPEED SENSOR RING NCM 2009 1/3
14	16138403	1	PLATE F. SPEED SENSOR
15	26006100	1	CABLE L = 5.00M, AMP, MALE, 3P
16	28047500	1	SPEED SENSOR HM
17	61000603	1	SPEED SNS MNT CLAMP F/DLS 4.5"
18	61010703	1	SPEED SENSOR BKT NCM NON-S OLD
19	61015803	1	SPEED SENSOR BKT NCM 2010
20	72050100	1	TWIN RPM SENSOR HN
21	72534000	1	TANK LEVEL ELEC SENSOR KIT 9M

WWW.ROLTRONIK.PL

HARDI	**Agroparts: www.HARDI-INTERNATIONAL.com**	
	PRESSURE SENSOR - AMP M0140-HIN, 01:01:16	Page 0 Date 16.03.2016 13:55

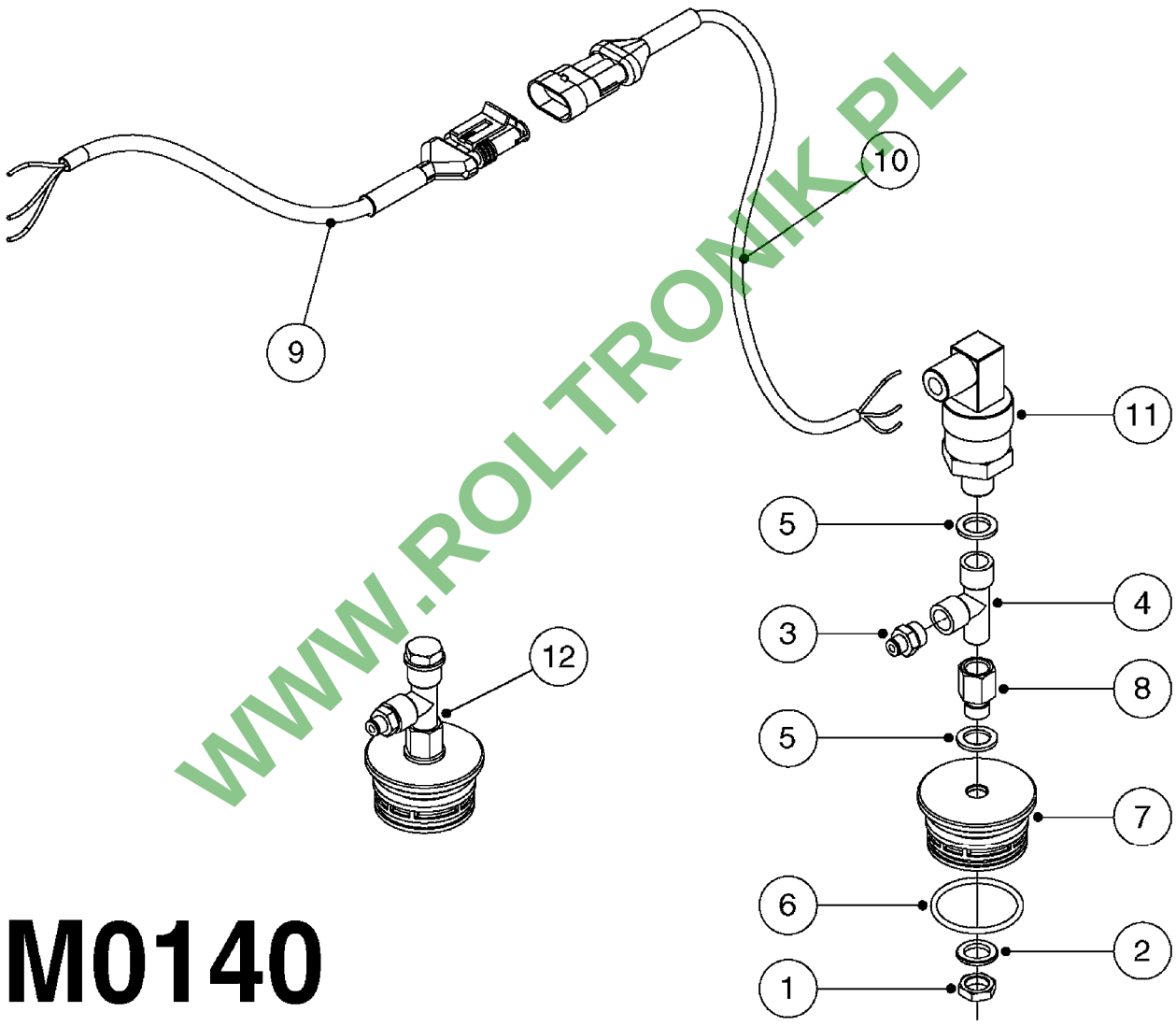

M0140

WWW.ROLTRONIK.PL

PRESSURE SENSOR - AMP
M0140-HIN, 01:01:16

Date 16.03.2016 13:55

Pos.	parts-n°	order qty	description
1	141341	1	NUT 1/4' BSP
2	145631	1	WASHER D21.5/D13.5X2.5 BRASS
3	232230	1	QUICK COUPLER 1/4"BSP X 4 MM
4	232285	1	TEE 1/4"MALE RUN X 2 1/4"FEMAL
5	241404	1	DOWTY SEAL 1/4"
6	242353	1	O-RING D44.2X3.0 VITON F.S-67
7	391135	1	FITT. S67 PLUG W/13.2Ø HOLE
8	14076900	1	NIPPLE 1/4" I-1/4" U L=28.5 SS
9	26007000	1	CABLE L = 0.20M, AMP, MALE, 3P
10	26007300	1	CABLE L = 1.00M, AMP, FEMALE, 3P
11	26026200	1	PRESSURE TRANS. 0-10BAR 4-20mA
12	72553900	1	S67 W/T-PIECE F. PRES. TRANS.

WWW.ROLTRONIK.PL

HARDI	**Agroparts: www.HARDI-INTERNATIONAL.com**	
	ANGLE SENSOR NCM M0150-HIN, 01:01:16	Page 0 Date 16.03.2016 13:55

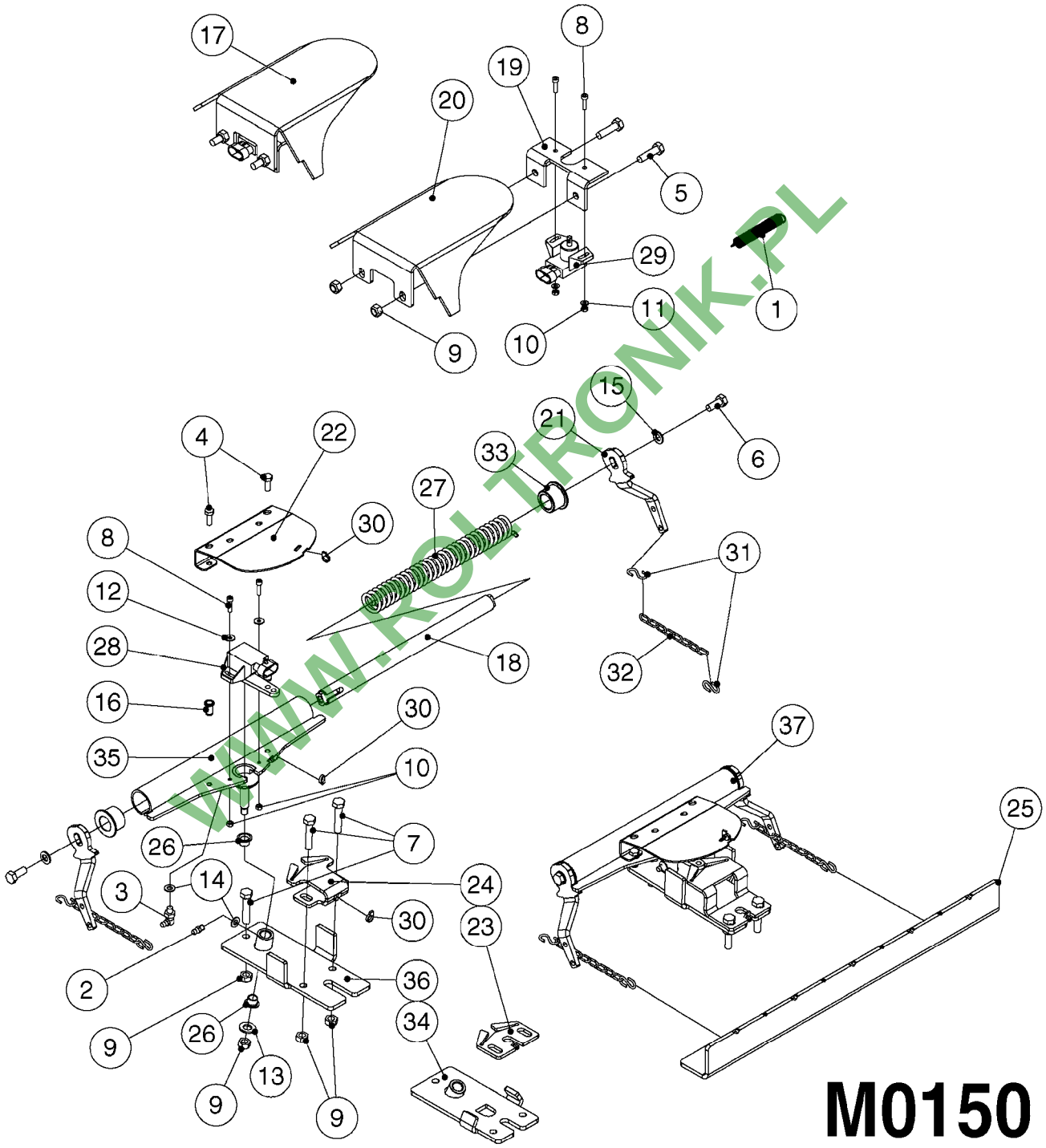

WWW.ROLTRONIK.PL

M0150

ANGLE SENSOR NCM
M0150-HIN, 01:01:16

Date 16.03.2016 13:55

Pos.	parts-n°	order qty	description
1	220947	1	SPRING D13.0/1,2 L=90 RST
2	283699	1	GREASE NIPPLE M6X1
3	283772	1	GREASE NIPPLE H3 M6 X 4 90°
4	410185	1	BOLT HEX 8.8 DEL M6X16 A2
5	420567	1	BOLT HEX 8.8 DEL M8X30 FT
6	420582	1	BOLT HEX 8.8 DEL M8X20 FT A2
7	420744	1	BOLT HEX 8.8 DEL M8X40
8	450902	1	BOLT ALLEN HEAD M4 X 16MM
9	460143	1	NUT HEX M8 LOCK A2 DIN985
10	461145	1	NUT HEX M4 LOCK
11	471037	1	SCREW A 4,3 DIN 125
12	471087	1	WASHER D12.0/4.3X1.0
13	471122	1	WASHER, M10, Ø20/10.5X 2.0, SS
14	471125	1	WASHER, M6, Ø12/ 6.4X 1.6, SS
15	471126	1	WASHER, M8, Ø16/ 8.4X 1.6, SS
16	480811	1	BLIND FASTENER M6 STAINLESS
17	741841	1	ANGLE SENSOR AND BRACKET REAR
18	14052100	1	AXLE D19 L=294/2XM8 STAINLESS
19	16125700	1	BRACKET FOR ANGLE SENSOR
20	16142200	1	GUARD PLATE FOR SENSOR
21	16173200	1	PLATE 6.0X134X42/2XD6/2XBENDS
22	16173400	1	PLATE 2.0X145.3X130/3XBENDS
23	16173600	1	PLATE 4.0X70X56 NCM 4400
24	16174100	1	PLATE 4.0X120X70/2XBENDS NCM 6600
25	16174300	1	BKT F. TRACTOR NCM STEE-UPDATE
26	21089300	1	BUSHING D12/10 L=9
27	22096500	1	TORSION SPRING D24/4.0 L=242
28	26005700	1	ANGLE SENSOR 70° 0.5-4.5 VDC
29	26005800	1	ANGULAR SENSOR 120° 0.5-4.5 VDC
30	28024103	1	TIE STRAP L=8" x W=3/16"
31	28045800	1	S-HOOK 3MM STAINLESS STEEL
32	28058400	1	CHAIN SS 8x16x2.0 L=600
33	39124400	1	BUSHING D28.5/19.1 L=21
34	61019200	1	FRONT SENSOR BRACKET NCM4400
35	61019300	1	FRONT SENSOR MT.THREADED HOLES
36	61019500	1	FRONT SENSOR BRACKET NCM6600
37	72564800	1	STEERING SENSOR NCM4400 FRONT STEERING SENSOR COMPLETE NCM4400
37	72565000	1	STEERING SENSOR NCM6600 FRONT STEERING SENSOR COMPLETE NCM6600

WWW.PDF-TRON.PL

HARDI	**Agroparts: www.HARDI-INTERNATIONAL.com**	
	TRAFFIC LIGHT KIT M0160-HIN, 01:01:16	Page 0 Date 16.03.2016 13:55

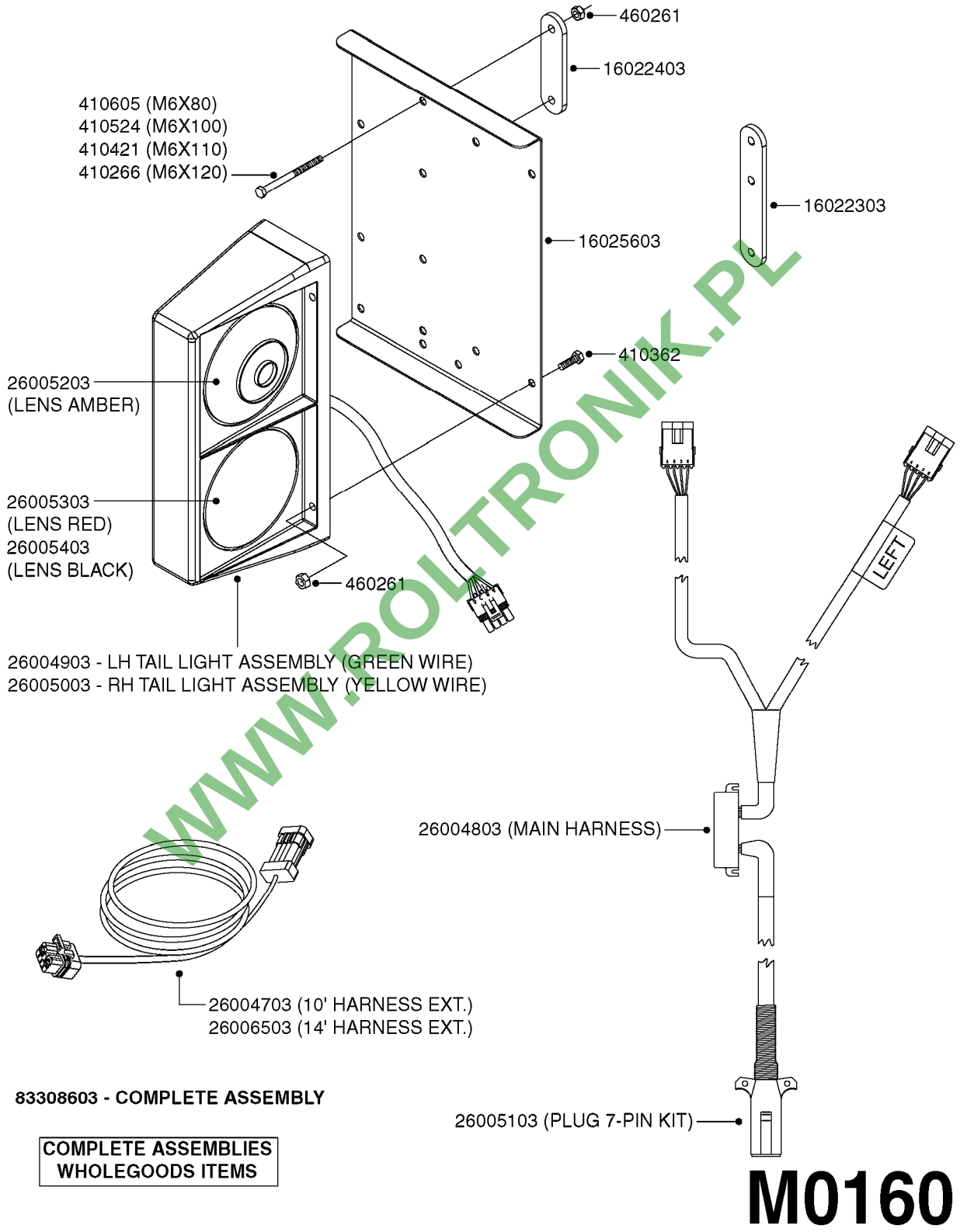

83308603 - COMPLETE ASSEMBLY

COMPLETE ASSEMBLIES WHOLEGOODS ITEMS

M0160

WWW.ROLTRONIK.PL

TRAFFIC LIGHT KIT
M0160-HIN, 01:01:16

Date 16.03.2016 13:55

parts-n°	order qty	description
410266	1	BOLT HEX 8.8 DEL M6X120
410362	1	BOLT HEX 8.8 SS M6X20 FT
410421	1	BOLT HEX M6X110 DIN931-A2 SS
410524	1	BOLT HEX 8.8 DEL M6X100
410605	1	BOLT HEX 8.8 DEL M6X80
460261	1	NUT HEX M6X1 LOCK A2 DIN985
16022303	1	BRACKET 100MM TUBE
16022403	1	BRACKET 60MM TUBE
16025603	1	BRACKET TAIL LIGHT DUAL LAMP
26004703	1	HARNESS 13' EXT 4 WIRE WP
26004803	1	HARNESS MAIN TAIL LIGHT
26004903	1	TAIL LIGHT GREEN WIRE LH
26005003	1	TAIL LIGHT YELLOW WIRE RH
26005103	1	PLUG 7-PIN AG TAIL LIGHT
26005203	1	LENS AMBER BEFORE 2009
26005303	1	LENS RED BEFORE 2009
26005403	1	LENS BLACK BEFORE 2009
26006503	1	HARNESS 14' EXT 4 WIRE WP
83308603	1	TRAFFIC LIGHT KIT

WWW.ROLTRONIK.PL

HARDI	**Agroparts: www.HARDI-INTERNATIONAL.com**	
	SYSTEM OVERVIEW HC5500 M0180-HIN, 01:01:16	Page 0 Date 16.03.2016 13:55

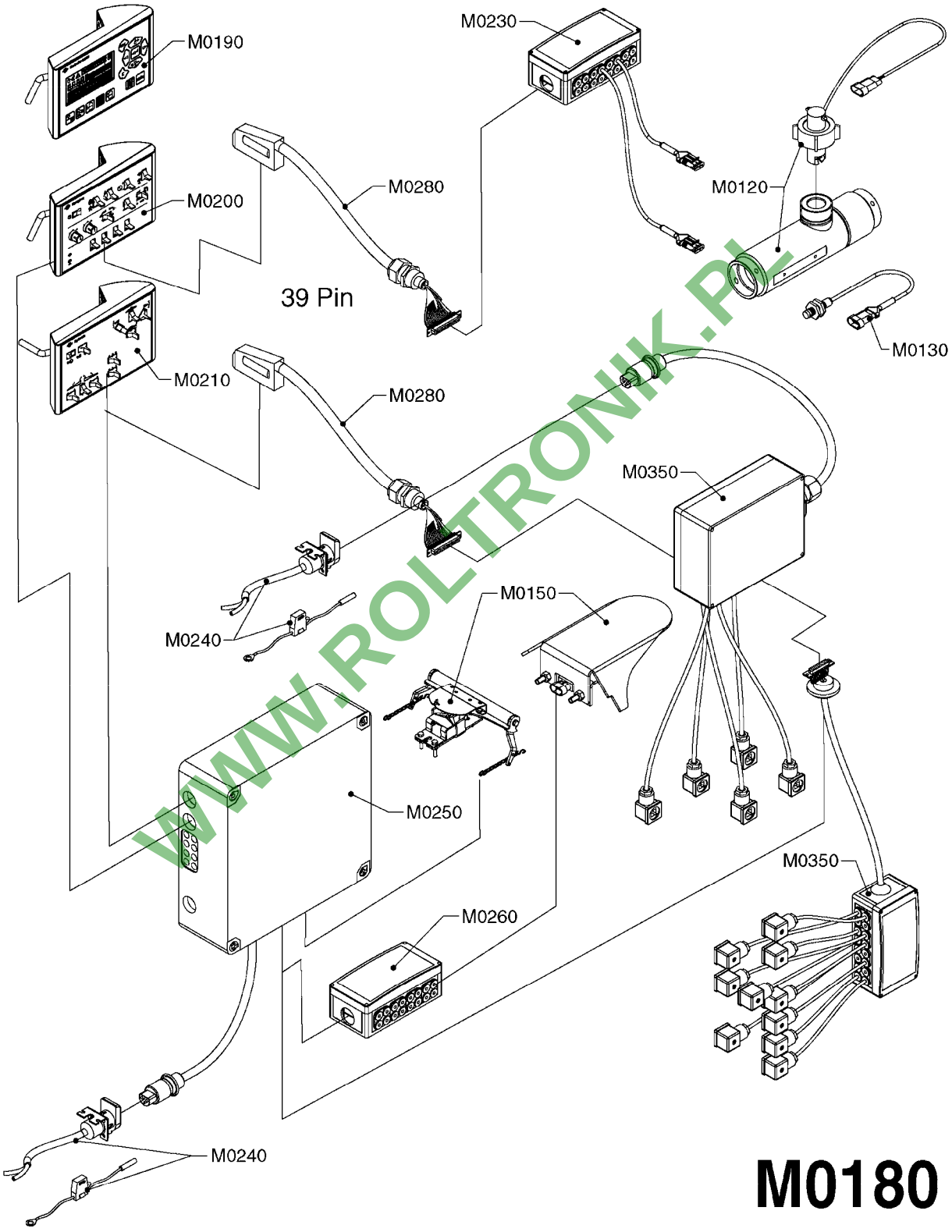

WWW.ROLTRONIK.PL

SYSTEM OVERVIEW HC5500
M0180-HIN, 01:01:16

parts-nº	order qty	description

WWW.ROLTRONIK.PL

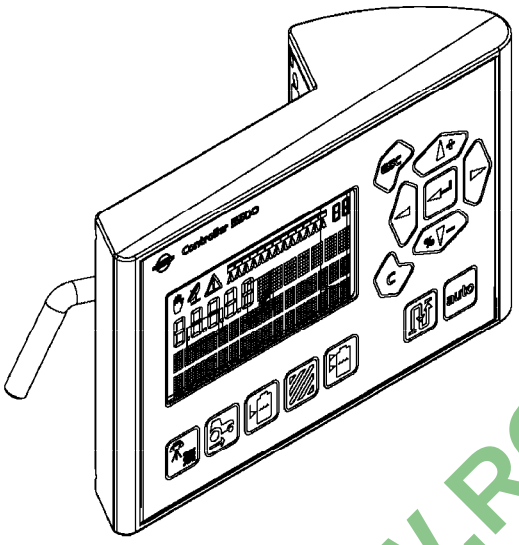

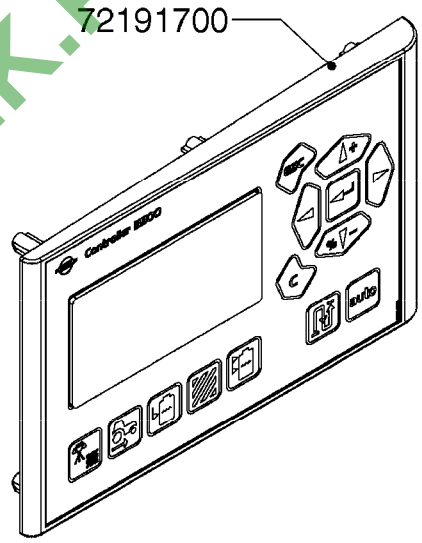

WWW.ROLTRONIK.PL

HC 5500	CONTROLLER
NEW	72155600
EXCHANGE	72174000

M0190

DISPLAY HC 5500
M0190-HIN, 01:01:16

Date 16.03.2016 13:55

parts-n°	order qty	description
72155600	1	HC 5500 DISPLAY UNIT
72174000	1	DISPLAY HC5500 REFURBISHED
72191700	1	HC5500 DISPLAY FRONT COMPLETE

WWW.ROLTRONIK.PL

HARDI	**Agroparts: www.HARDI-INTERNATIONAL.com**	
	SPRAYBOX II M0200-HIN, 01:01:16	Page 0 Date 16.03.2016 13:55

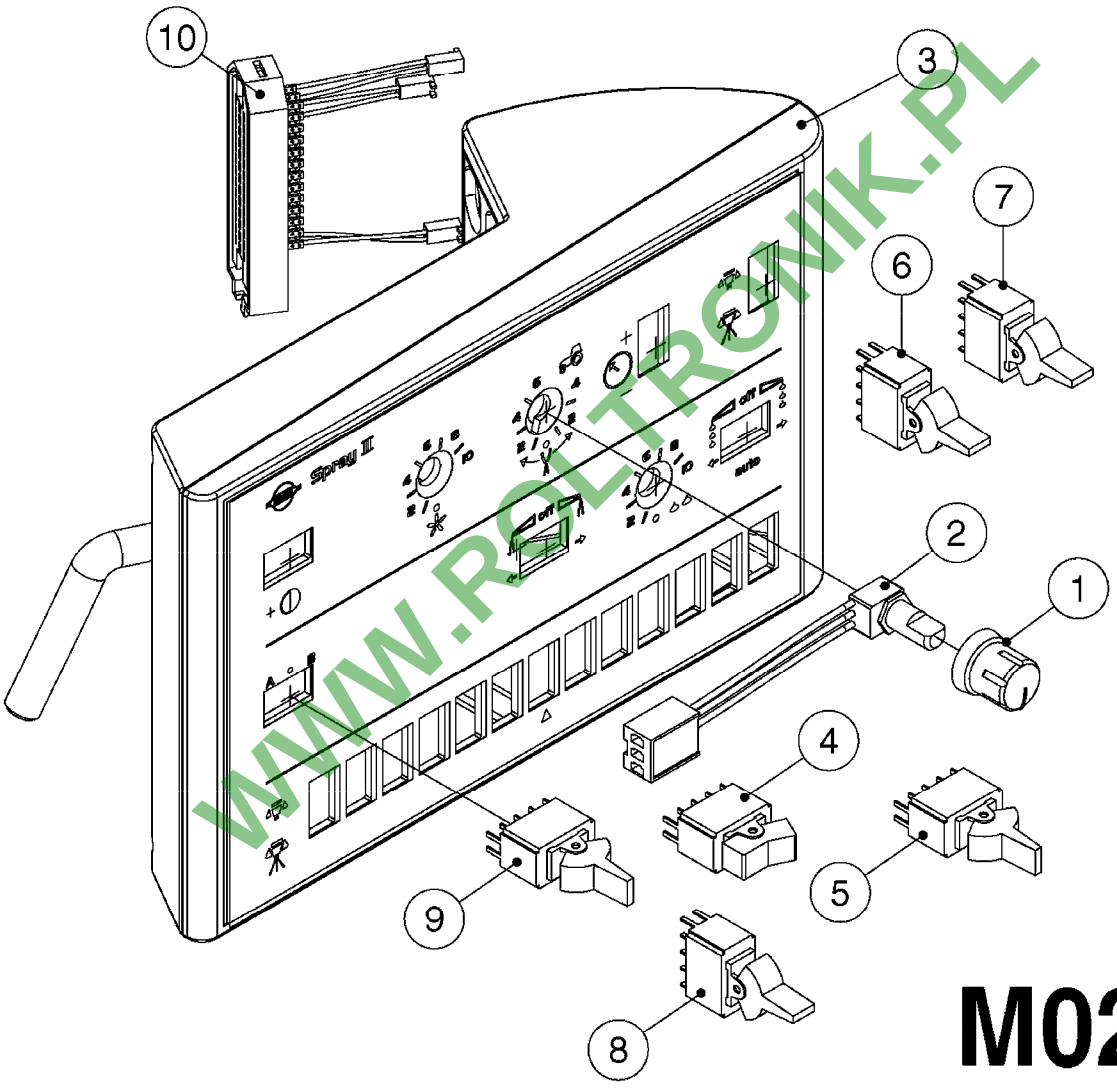

WWW.ROLTRONIK.PL

M0200

SPRAYBOX II
M0200-HIN, 01:01:16

Date 16.03.2016 13:55

Pos.	parts-n°	order qty	description
1	26000400	1	KNOB F.FOAM ADJUST HC5500
2	26005300	1	POT.METER F. SPRAYBOX II
3	26010200	1	CONTROL BOX 2SEC, SPRAY BOX II
3	26010300	1	CONTROL BOX 3SEC, SPRAY BOX II
3	26010400	1	CONTROL BOX 4SEC, SPRAY BOX II
3	26010500	1	CONTROL BOX 5SEC, SPRAY BOX II
3	26010600	1	CONTROL BOX 6SEC, SPRAY BOX II
3	26010700	1	CONTROL BOX 7SEC, SPRAY BOX II
3	26010800	1	CONTROL BOX 8SEC, SPRAY BOX II
3	26010900	1	CONTROL BOX 9SEC, SPRAYBOX II
3	26011000	1	SPRAY CONT. II EVC 4 SEC. HAZ
3	26011100	1	SPRAY CONT. II EVC 5 SEC. HAZ
3	26011200	1	SPRAY CONT. II EVC 6 SEC. HAZ
3	26011300	1	SPRAY CONT. II EVC 7 SEC. HAZ
3	26013600	1	CONTROL BOX 13SEC, SPRAYBOX II
4	26020200	1	SWITCH ON-ON SP ROCKER RED
5	26020300	1	SWITCH ON-OFF-ON SP BLACK
6	26020400	1	SWITCH MOM-OFF-MOM SP YELLOW
7	26020600	1	SWITCH ON-ON SP GREEN
8	26020800	1	SWITCH ON-ON DP GREEN
9	26021000	1	SWITCH ON-OFF-ON DP BLACK
10	28031400	1	PLUG 39-POLE FEMALE HC5500

WWW.ROLTROMK.PL

HARDI	**Agroparts: www.HARDI-INTERNATIONAL.com**	
	HYDRAULIC CONTROL BOX 39-PIN M0210-HIN, 01:01:16	Page 0 Date 16.03.2016 13:55

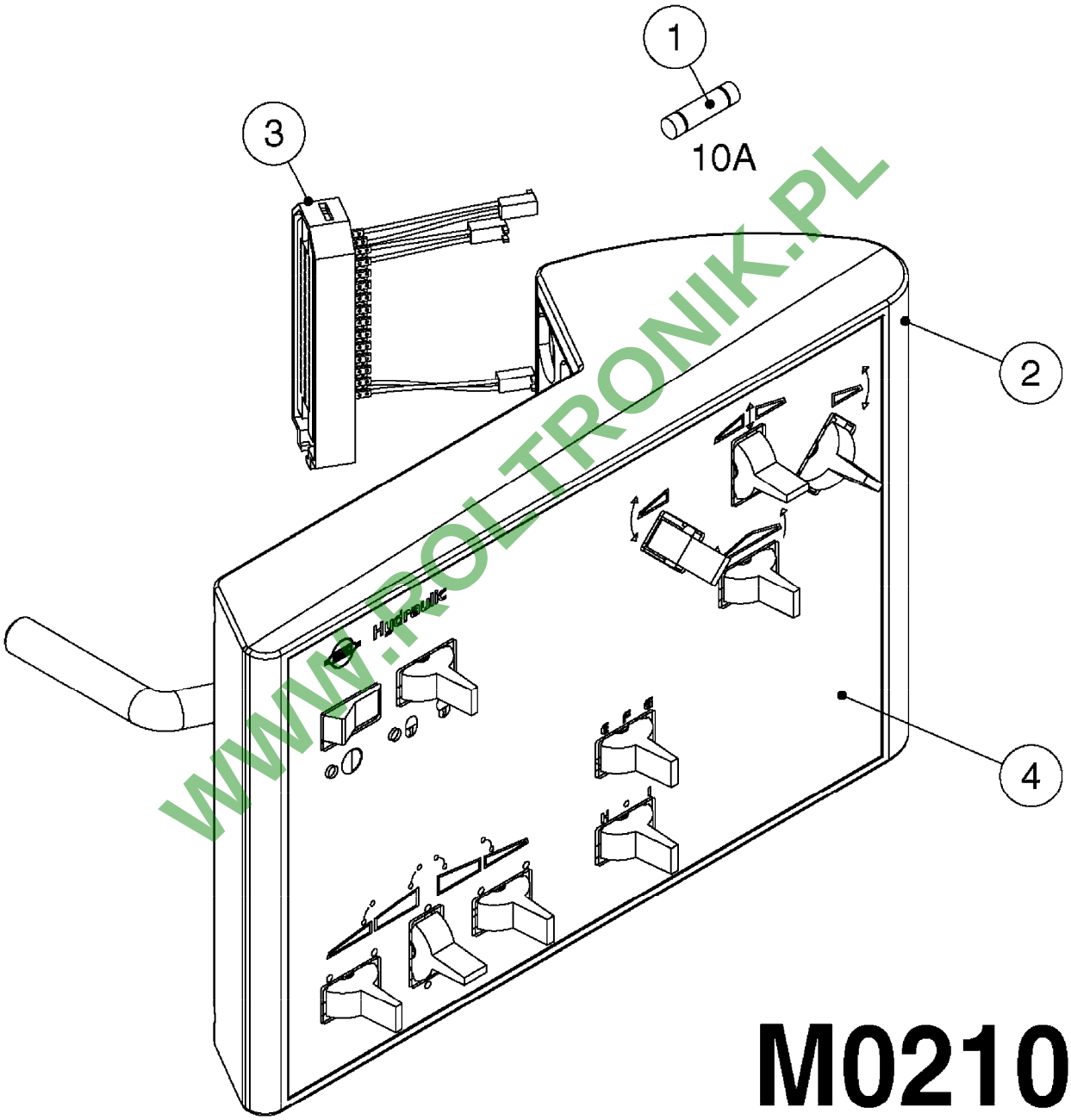

WWW.ROLTRONIK.PL

M0210

HYDRAULIC CONTROL BOX 39-PIN
M0210-HIN, 01:01:16

Pos.	parts-n°	order qty	description
1	26000300	1	FUSE 10A D5X20 MM
2	26048000	1	HYD. CONTROL BOX WITHOUT DECAL (2012)
3	28031400	1	PLUG 39-POLE FEMALE HC5500
4	97611203	1	DECAL-FTZ SEQUENTIAL FOLD
4	97612603	1	DECAL HYD.CNTRL.BOX RANGER HZ
4	97612703	1	DECAL HYD.CNTRL.BOX RANGER HV
4	97614803	1	DECAL HYD.CNTRL.BOX 90/60
4	97614903	1	DECAL HYD.CNTRL.BOX 120/90
4	97615103	1	DECAL HYD.CNTRL.BOX SPB/SPC

WWW.ROLTRONIK.PL

HARDI	**Agroparts: www.HARDI-INTERNATIONAL.com**	
	CABLES M0220-HIN, 01:01:16	Page 0 Date 16.03.2016 13:55

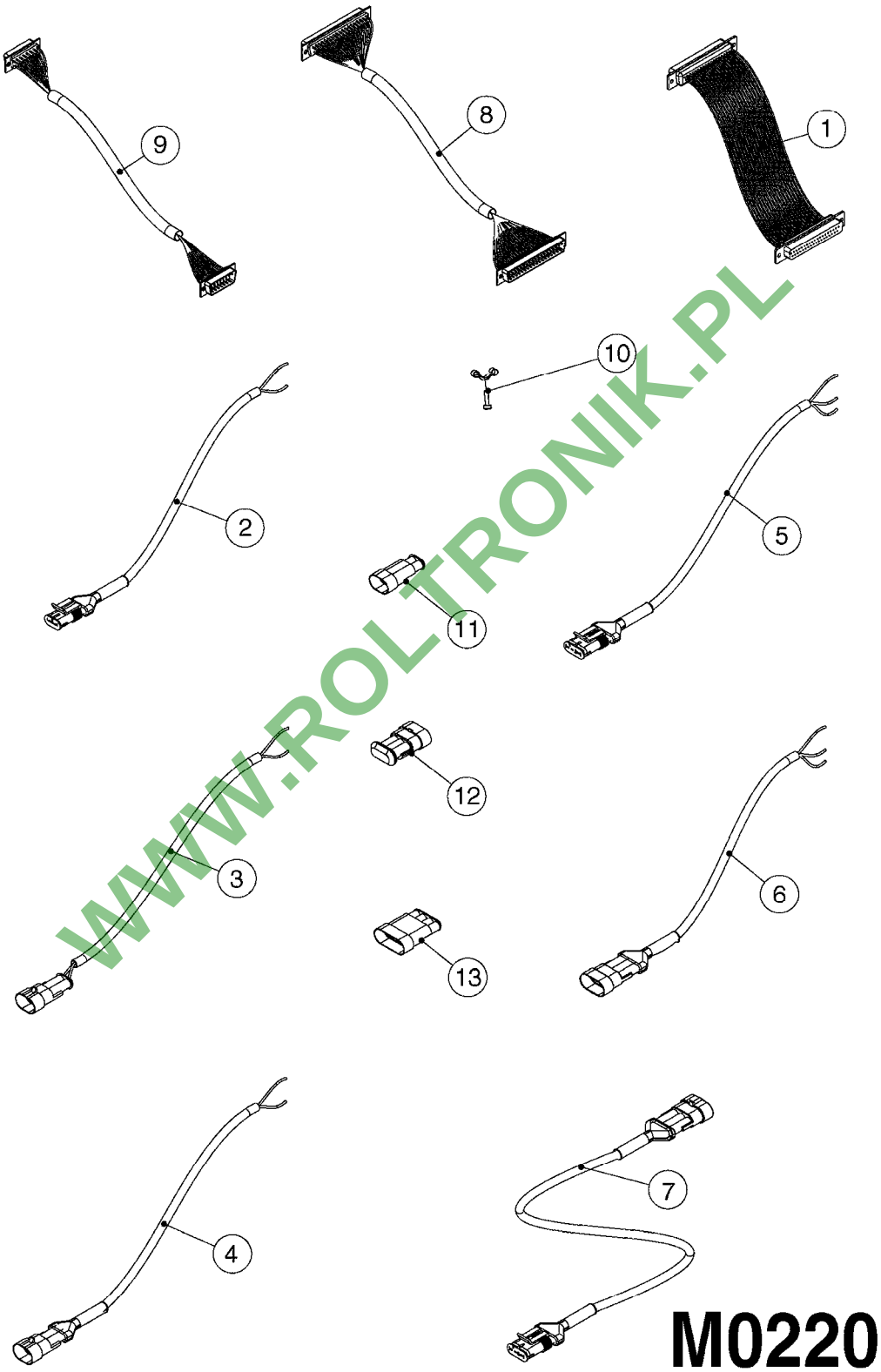

WWW.ROLTRONIK.PL

M0220

CABLES
M0220-HIN, 01:01:16

Pos.	parts-n°	order qty	description
1	26005900	1	WIRE 37/37 POLE DAH/JOBCOM
2	26006200	1	CABLE L = 4.50M, AMP, MALE, 2P
2	26006300	1	CABLE L = 0.50M, AMP, MALE, 2P
2	26006400	1	CABLE L = 0.75M, AMP, MALE, 2P
2	26006500	1	CABLE L = 1.50M, AMP, MALE, 2P
2	26006600	1	CABLE L = 9.00M, AMP, MALE, 2P
3	26006700	1	CABLE L = 0.12M, AMP, FEMALE, 2P
4	26006800	1	CABLE L = 1.00M, AMP, FEMALE, 2P
5	26006000	1	CABLE L = 1.50M, AMP, MALE, 3P
5	26006100	1	CABLE L = 5.00M, AMP, MALE, 3P
5	26007000	1	CABLE L = 0.20M, AMP, MALE, 3P
5	26007100	1	CABLE L = 9.00M, AMP, MALE, 3P
5	26007200	1	CABLE L =13.00M, AMP, MALE, 3P
6	26007300	1	CABLE L = 1.00M, AMP, FEMALE, 3P
7	26007400	1	CABLE L = 3.00M, AMP, EXT, 3P
7	26009800	1	CABLE L = 0.50M, AMP, EXT, 2P
8	26004900	1	CABLE FEM/MALE 37P L=9.5M
9	26007500	1	CABLE FEM/FEM 15P L=3.5M
10	262150	1	SCREW ASSM.FOR D-SUB PLUG
11	72450600	1	CAP F. AMP SUPER SEAL 2P PLUG
12	72450700	1	CAP F. AMP SUPER SEAL 3P PLUG
13	72450800	1	CAP F. AMP SUPER SEAL 4P PLUG

WWW.ROLTRONIK.PL

HARDI	**Agroparts: www.HARDI-INTERNATIONAL.com**	
	JUNCTION BOX - LIQUID M0230-HIN, 01:01:16	Page 0 Date 16.03.2016 13:55

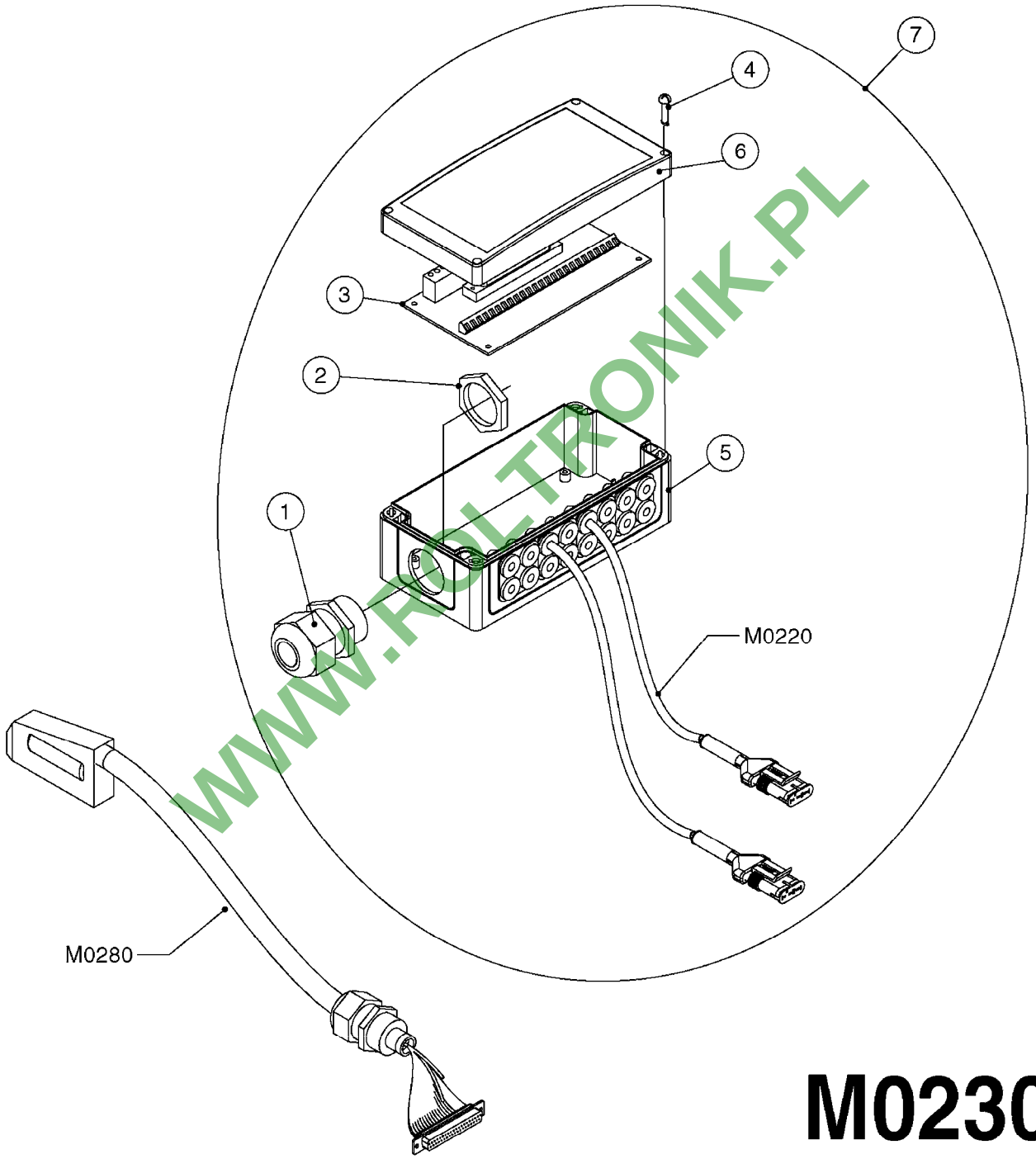

WWW.ROLTRONIK.PL

M0230

JUNCTION BOX - LIQUID
M0230-HIN, 01:01:16

Pos.	parts-n°	order qty	description
1	262106	1	BULKHEAD F. CABLE 6.5-14 BLACK
2	262107	1	NUT F. BULKHEAD CABLE BLACK
3	26004800	1	CIRCUIT BD SEC VLV NCM 13SEC 13 SECTION
3	72173900	1	CIRCUIT BD SEC VLV 39PIN 9SEC 9 SECTION
4	28082100	1	SCREW F. BOX LID 1/4" L=20
5	33508700	1	BOX BOTTOM 160X80X40 BLACK 1-HOLE
6	33508800	1	LID 160X80X15 BLK W/SCREWS
7	72115400	1	CONNECTION BOX F. OP. UNIT SV9

WWW.ROLTRONIK.PL

HARDI	**Agroparts: www.HARDI-INTERNATIONAL.com**	
	POWER SUPPLY CABLES M0240-HIN, 01:01:16	Page 0 Date 16.03.2016 13:55

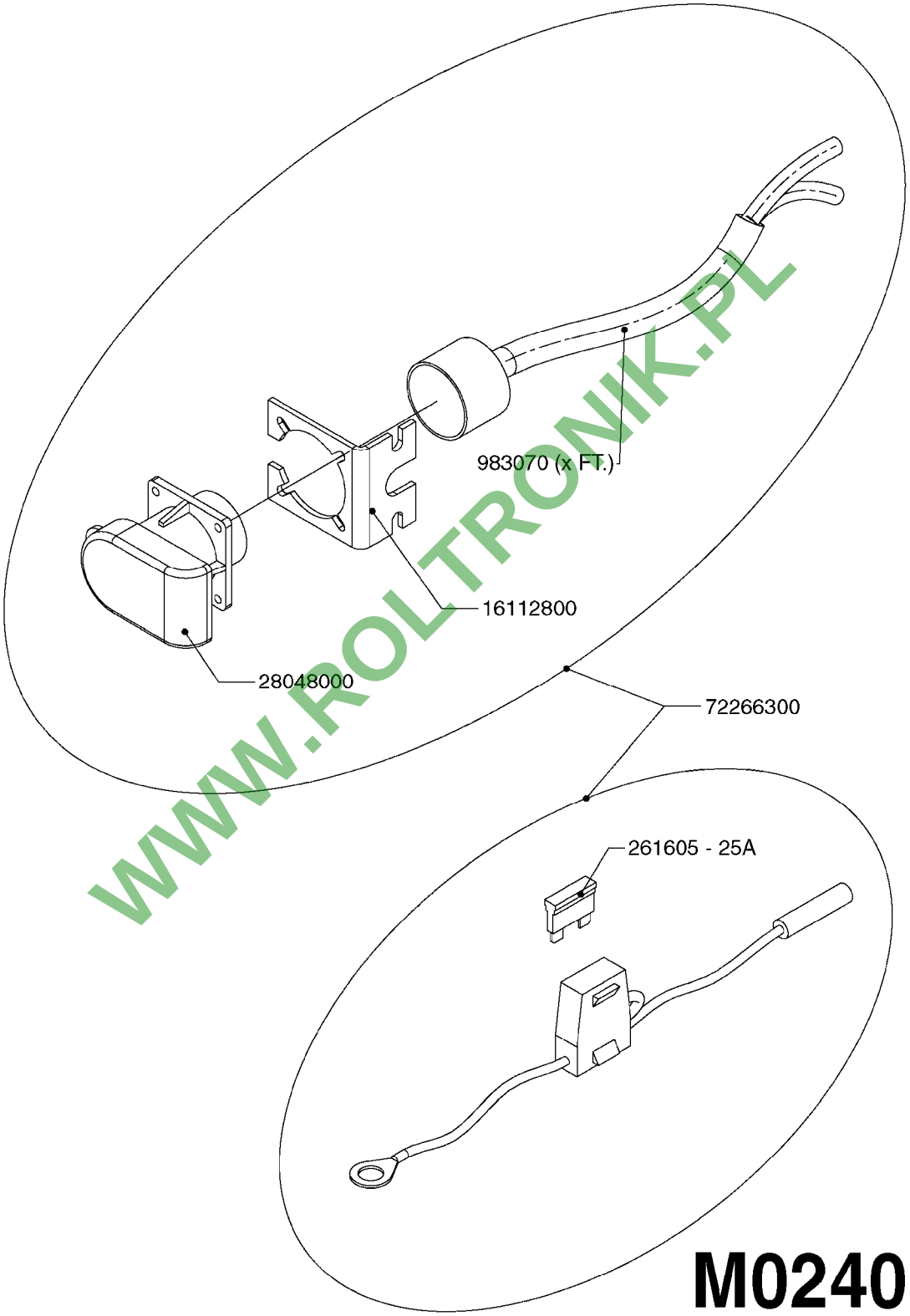

M0240

WWW.ROLTRONIK.PL

POWER SUPPLY CABLES
M0240-HIN, 01:01:16

parts-n°	order qty	description
261605	1	FUSE 25A F. HP3050
983070	1	CABLE 2X6MM
16112800	1	BRACKET F.12V POWER CABLE/PLUG
28048000	1	PLUG 3-POL DIN 9680 FEM.CHASS
72266300	1	CABLE 12VDC POWER F. TRACTOR

WWW.ROLTRONIK.PL

HARDI	**Agroparts: www.HARDI-INTERNATIONAL.com**	
	JOBCOM AND BREAK OUT M0250-HIN, 01:01:16	Page 0 Date 16.03.2016 13:55

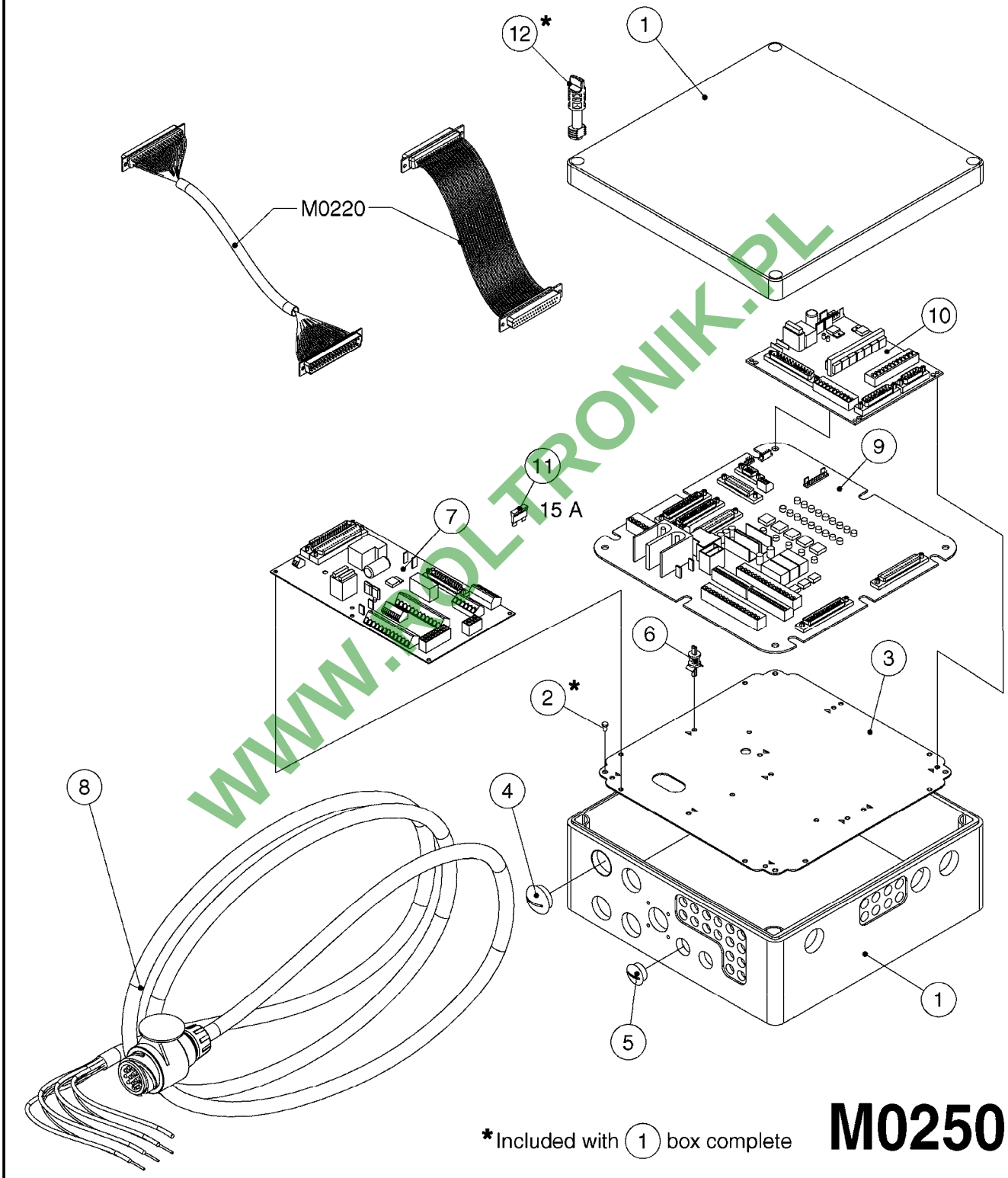

WWW.PDLTRONIK.PL

*Included with (1) box complete

M0250

JOBCOM AND BREAK OUT
M0250-HIN, 01:01:16

Date 16.03.2016 13:55

Pos.	parts-n°	order qty	description
1	391095	1	BOX COMPL. 300X300X135 DRILLED
2	440673	1	SCREW F.PLASTIC 5X12 SS
3	16132400	1	PLATE 1.5X270X270/JOBCOMPUTER
4	26004600	1	PLUG F.DRILLED HOLE 21MM
5	26004700	1	PLUG F.DRILLED HOLE 13.5MM
6	26005100	1	CONNECTOR FOR PCB, PLASTIC
7	26005500	1	PCB BREAKOUT BOX EL BOX CM"05"
8	26013800	1	CABLE HC6500 JOBCOM TO CABIN
9	26016700	1	JOBCOM PCB HW2.1 FOR HC6500
9	72289900	1	JOBCOM PCB COMMANDER 44/6600
9	72369300	1	JOBCOM PCB NCM44/6600 REFURB.
10	26029200	1	DAH PCB F. JOBCOM NCM '09
11	28048600	1	FUSE AUTO 15 AMP.
12	28091400	1	FINGER SCREW F.BOX 300X300X135

WWW.ROLTRONIK.PL

HARDI	**Agroparts: www.HARDI-INTERNATIONAL.com**	
	TRACK ASSEMBLE BOX NCM M0260-HIN, 01:01:16	Page 0 Date 16.03.2016 13:55

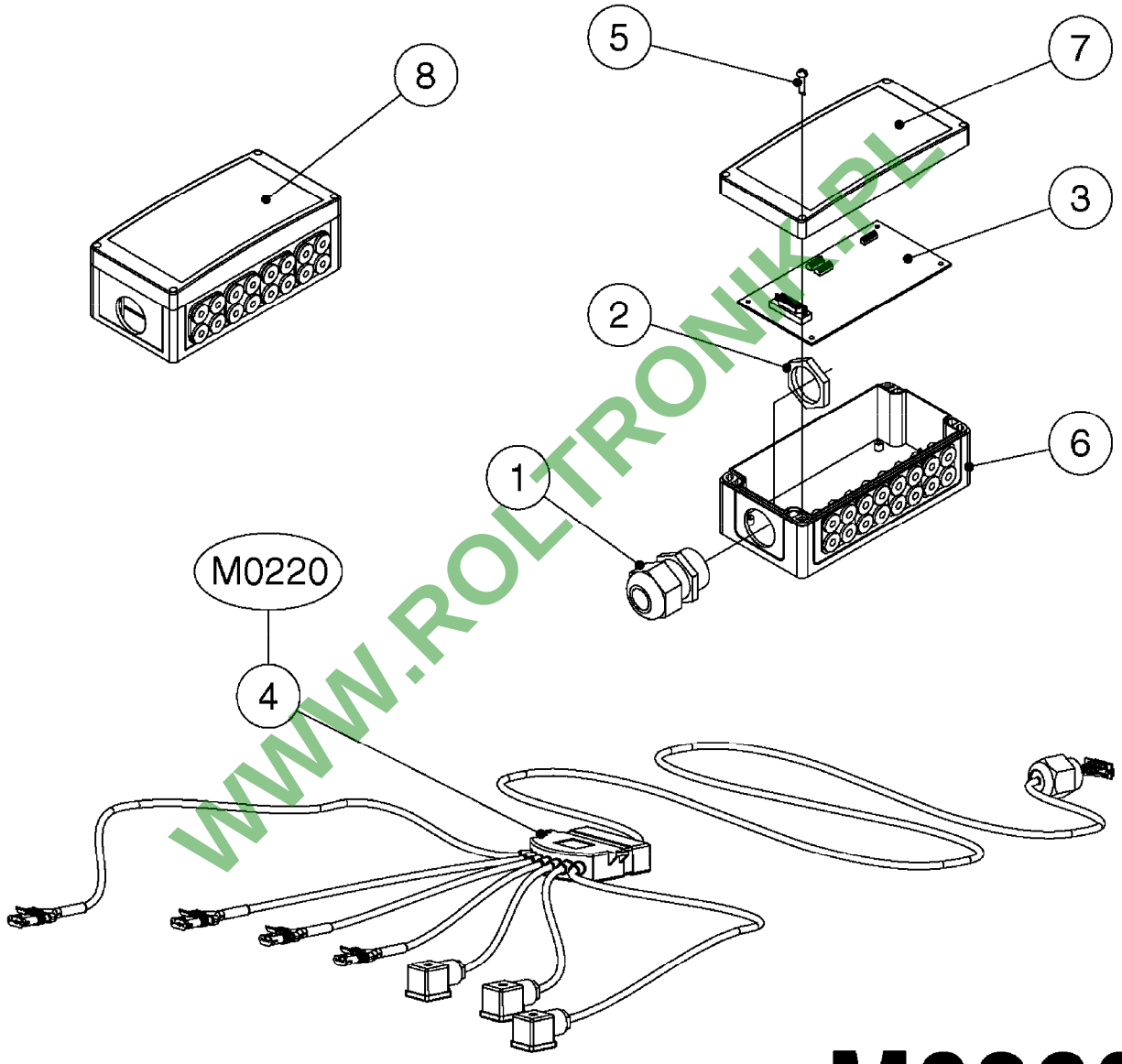

WWW.ROLTRONIK.PL

M0260

TRACK ASSEMBLE BOX NCM
M0260-HIN, 01:01:16

Date 16.03.2016 13:55

Pos.	parts-n°	order qty	description
1	262106	1	BULKHEAD F. CABLE 6.5-14 BLACK
2	262107	1	NUT F. BULKHEAD CABLE BLACK
3	26007600	1	PCB F. TRACKING JUNC. BOX
4	26024000	1	CABLE SET FOR TRACK NCM
5	28082100	1	SCREW F. BOX LID 1/4" L=20
6	33508700	1	BOX BOTTOM 160X80X40 BLACK 1-HOLE
7	33508800	1	LID 160X80X15 BLK W/SCREWS
8	72311700	1	JUNCTION BOX F.STEERING NCM

WWW.ROLTRONIK.PL

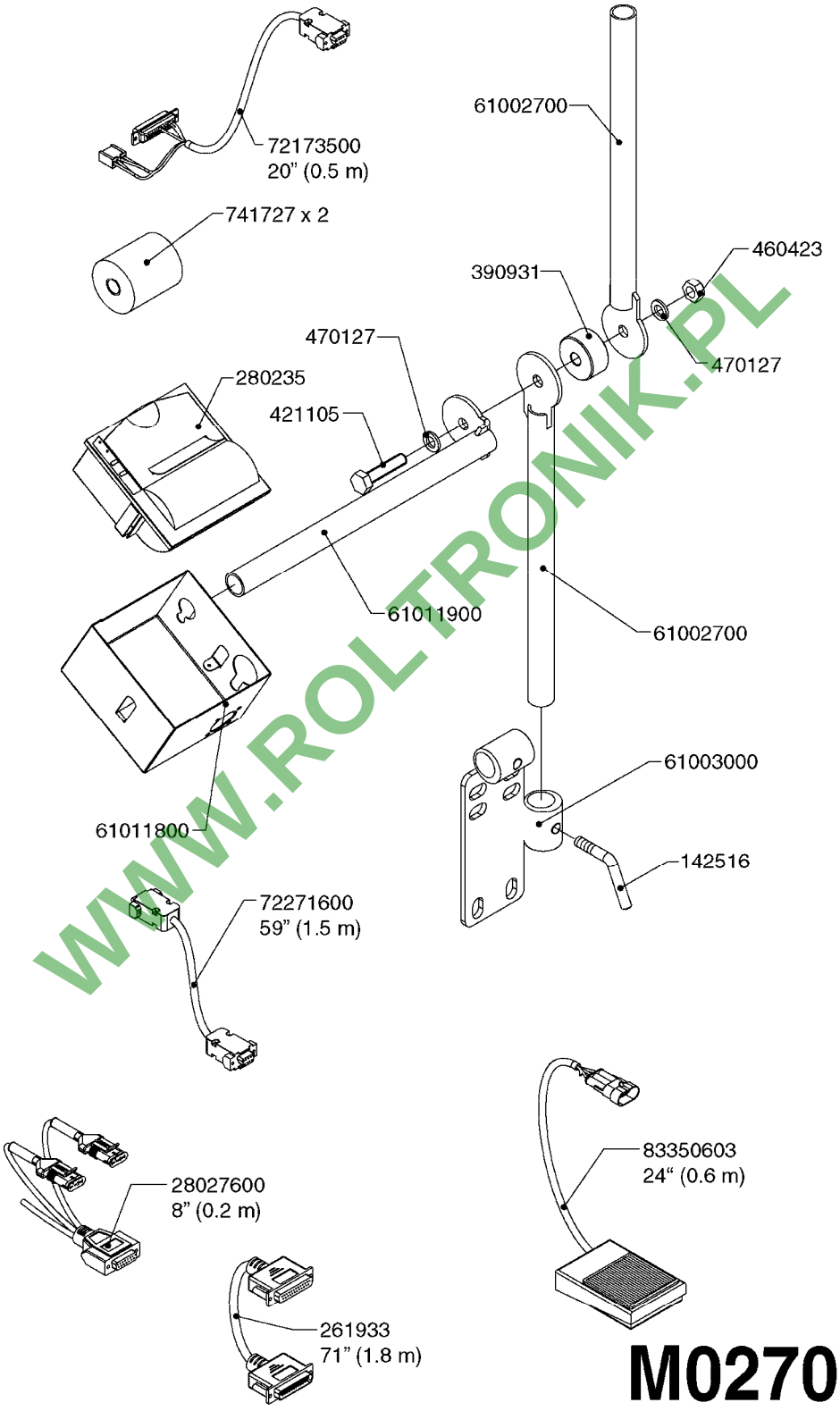

WWW.ROLTRONIK.PL

HC 5500 ACCESSORIES
M0270-HIN, 01:01:16

parts-n°	order qty	description
142516	1	SCREW SET M10 BENT F. LOCKING
261933	1	CABLE W/PLUG 2X25 L=71"
280235	1	HARDI PRINTER WITH CLOCK
390931	1	PLASTIC SPACER D40XD11 L=20
421105	1	M10X45 MACHINE SCREW STAINLESS
460423	1	NUT HEX M10X1.5 LOCK
470127	1	WASHER D15D10X2 M10 LOCK
741727	1	PAPER, THERMAL, HC5500 PRINTER
28027600	1	WIRE HC5500 AUX.
61002700	1	TUBE BRACKET F.TRACTOR MOUNT
61003000	1	BRACKET F.TRACTOR MOUNT
61011800	1	BOX FOR HARDI PRINTER
61011900	1	TUBE BRACKET F.TRACTOR MOUNT
72173500	1	WIRE F.PRINTER HC5500 L=20"
72271600	1	HC5500 COMMUNICATION CABLE
83350603	1	FOOT SWITCH HC5500 CONTROL

WWW.ROLTRONIK.PL

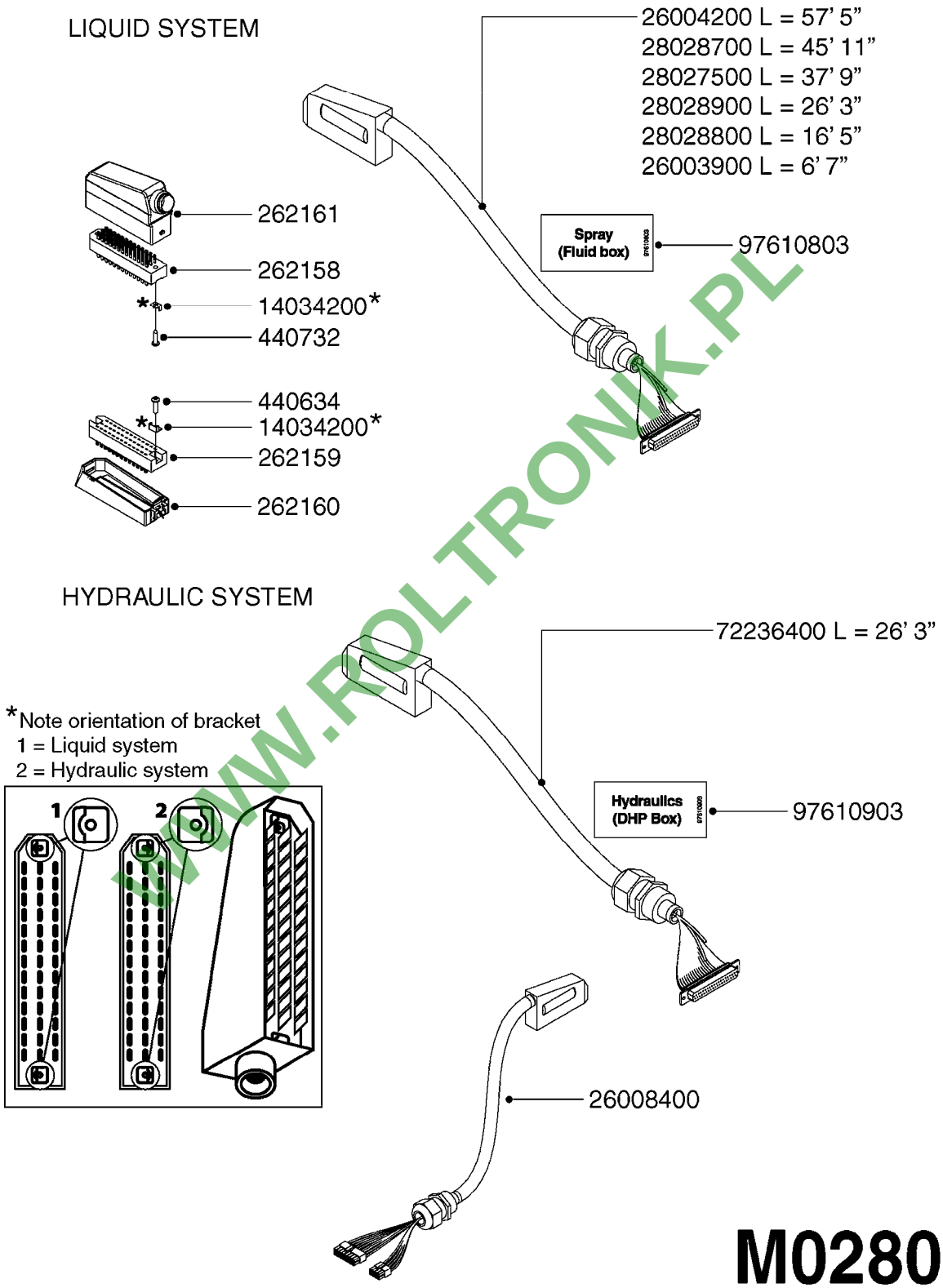

WWW.ROLTRONIK.PL

M0280

39 PIN CABLES
M0280-HIN, 01:01:16

parts-n°	order qty	description
262158	1	PLUG INSERT 39 POLE MALE
262159	1	PLUG INSERT 39 POLE FEMALE
262160	1	PLUG HOUSING 39 POLE FEMALE
262161	1	PLUG HOUSING F/39 POLE MALE
440634	1	SCREW 5/8"
440732	1	PT SCREW 35X12B Z5452 ELZ
14034200	1	CODE BRACKET FOR 39 PIN CABLE
26003900	1	WIRE 37-39 PIN EVC, 6.6'
26004200	1	WIRE 37-39 PIN EVC, 57.4'
26008400	1	WIRE 39-PIN 24 WIRE L=8M
28027500	1	WIRE 37-39 PIN EVC, 37.7'
28028700	1	WIRE 37-39 PIN EVC, 45.9'
28028800	1	WIRE 37-39 PIN EVC, 16.4'
28028900	1	WIRE 37-39 PIN EVC, 26.2'
72236400	1	DAH CONN. WIRE/TRACTOR L=8M
97610803	1	DECAL-SRAY BOX 39-PIN
97610903	1	DECAL-HYDRAULIC BOX 39-PIN

WWW.ROLTRONIK.PL

NORAC UC4 BOOM HEIGHT CONTROL
M0290-HIN, 01:01:16

Page 0

Date 16.03.2016 13:55

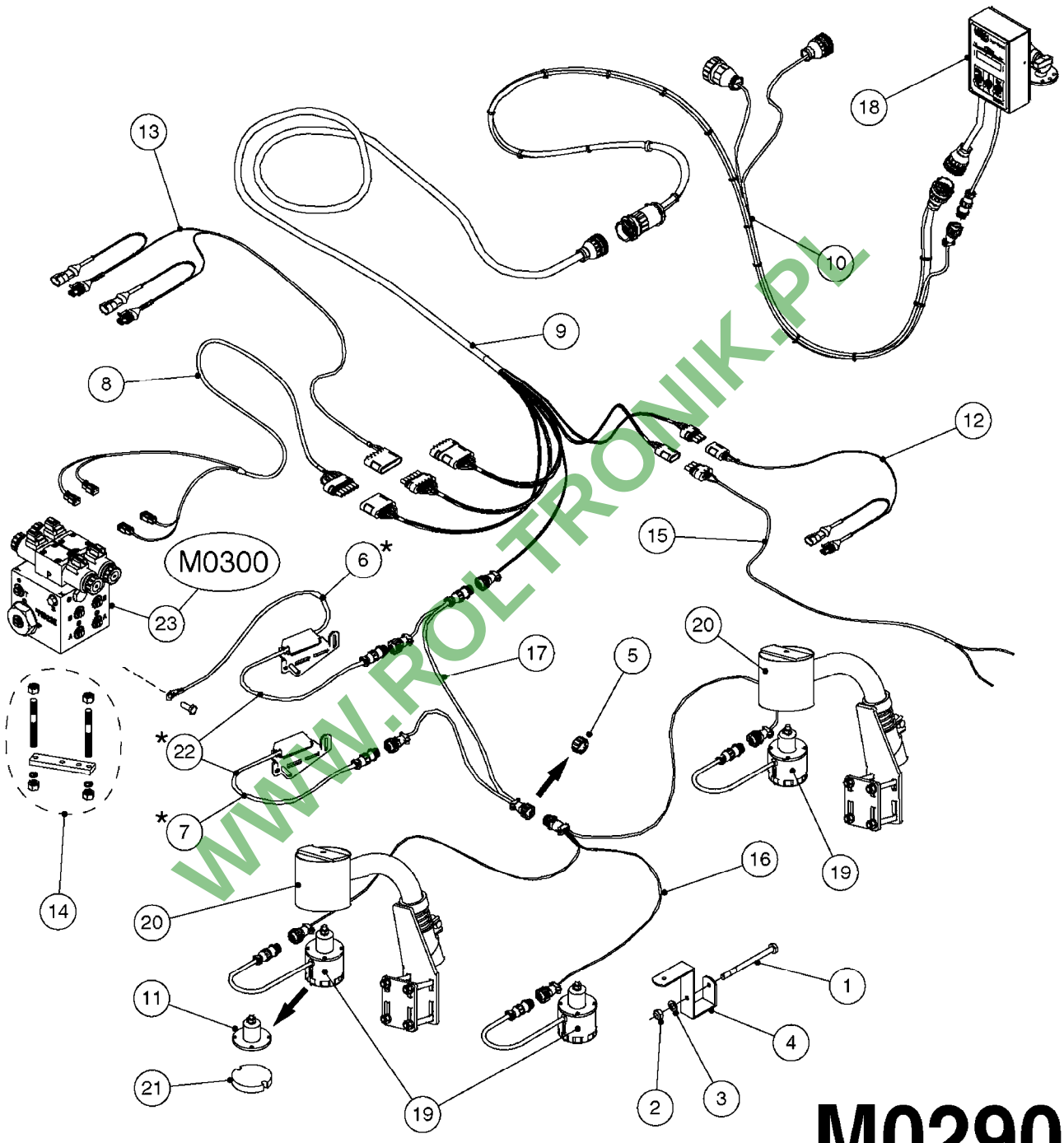

WWW.ROLTRONIK.PL

M0290

*CANNOT MIX OLD AND NEW STYLE ROLL SENSORS!

If replacing Norac P/N 44641 or 44642, must use pair of new style sensors (22).
Only new style sensors sold separately; (6) (Norac P/N 45000), (7) (Norac P/N 45001).
If unsure, pair of new style sensors works with all versions of UC4.

NORAC UC4 BOOM HEIGHT CONTROL
M0290-HIN, 01:01:16

Pos.	parts-n°	order qty	description
1	410443	1	BOLT HEX 8.8 DEL M6X70
1	410605	1	BOLT HEX 8.8 DEL M6X80 SPB/SPC BOOM
2	460261	1	NUT HEX M6X1 LOCK A2 DIN985
3	471124	1	WASHER, M6, Ø18/ 6.4X 1.6, SS
4	16128603	1	BRACKET F. SENSOR 60X60 TUBE SPB/SPC BOOM
4	16128703	1	BRACKET F. SENSOR 50x50 TUBE FORCE BOOM (FTZ)
5	26016303	1	CONNECTOR RING CPC #11 NORAC
6	26025903	1	NORAC UC4+ ROLL SENSOR W/TEMP. CONFIRM NORAC P/N 45000
7	26026003	1	NORAC UC4+ ROLL SENSOR CONFIRM NORAC P/N 45001
8	26026600	1	NORAC CABLE VAR.RT.VLV DIN 3-PIN CONNECTORS/HIRSCHMAN
8	28055603	1	NORAC CABLE VAR.RT.VLV DEUTSCH 2-PIN CONNECTORS/DEUTSCH
9	28049503	1	NORAC CABLE EXTENSION
10	28049603	1	NORAC POWER CABLE
11	28050303	1	NORAC RUBBER TOP&BOLT F.SENSOR
12	28050703	1	NORAC UC4+ OPEN CTR. CABLE
13	28054303	1	PARALIFT INTERFACE CABLE NORAC
14	28055503	1	NORAC VALVE MOUNTING HARDWARE
15	28055703	1	NORAC VALVE CABLE ROLL PIGTAIL
16	28085900	1	SENSOR BRANCH CABLE NORAC
17	28086200	1	CAN NODE DUAL CABLE NORAC
18	28086300	1	UC4 DISPLAY PANEL NORAC
19	28086400	1	UC4 ULTRASOUND SENSOR NORAC
20	28086500	1	UC4 SENSOR MOUNTING BKT. NORAC
21	28086600	1	FOAM DISC F. SENSOR NORAC
22	70112503	1	UC4+ ROLL SENSOR KIT '11 HIN INCLUDES NORAC P/N 45000 & 45001
23	78216100	1	NORAC VALVE BLOCK COMP, DEUTSCH CON.

WWW.PO-TRONIK.PL

NORAC VARIABLE RATE VALVE UC4
M0300-HIN, 01:01:16

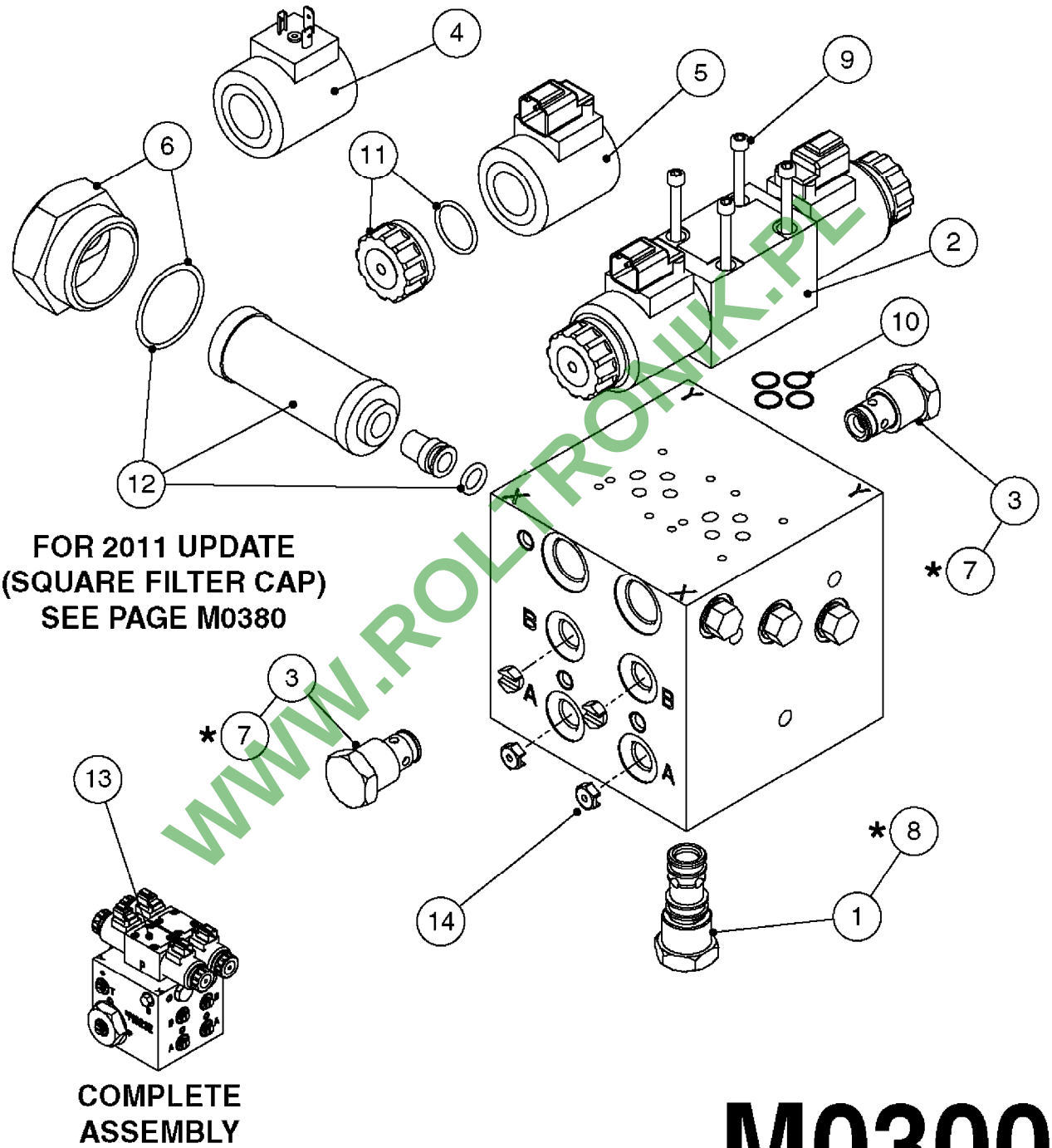

FOR 2011 UPDATE
(SQUARE FILTER CAP)
SEE PAGE M0380

COMPLETE
ASSEMBLY

*SEAL KITS

M0300

WWW.ROLTRONIK.PL

NORAC VARIABLE RATE VALVE UC4
M0300-HIN, 01:01:16

Pos.	parts-n°	order qty	description
1	28048803	1	NORAC CHECK VALVE
2	28048903	1	NORAC PROP VALVE 3-PIN CONNECTORS/HIRSCHMAN
2	28055803	1	NORAC SOLENOID - DEUTSCH CONN. 2-PIN CONNECTORS/DEUTSCH
3	28049403	1	NORAC CHECK VALVE
4	28056403	1	COIL, NORAC, PROP, DIN
5	28056503	1	COIL, NORAC, PROP, DEUTSCH
6	28066803	1	NORAC FILTER CAP W/O-RING
7	28066903	1	NORAC SEAL KIT F.28049403
8	28067003	1	NORAC SEAL KIT F.28048803
9	28068103	1	NORAC HEX CAPSCREW 10-24X2 SS
10	28068203	1	NORAC O-RING F.SOLENOID VALVE
11	28074903	1	NORAC COIL NUT AND O-RING
12	75076900	1	NORAC FILTER ELEMENT KIT
13	78216100	1	NORAC VALVE BLOCK COMP, DEUTSCH CON. COMPLETE W/2-PIN DEUTSCH SOLENOIDS
14	78603300	1	NORAC ONE WAY ORIFICE, .047"

WWW.ROLTRONIK.PL

HARDI	**Agroparts: www.HARDI-INTERNATIONAL.com**	
	JUNCTION BOXES - HYDRAULIC M0350-HIN, 01:01:16	Page 0
		Date 16.03.2016 13:56

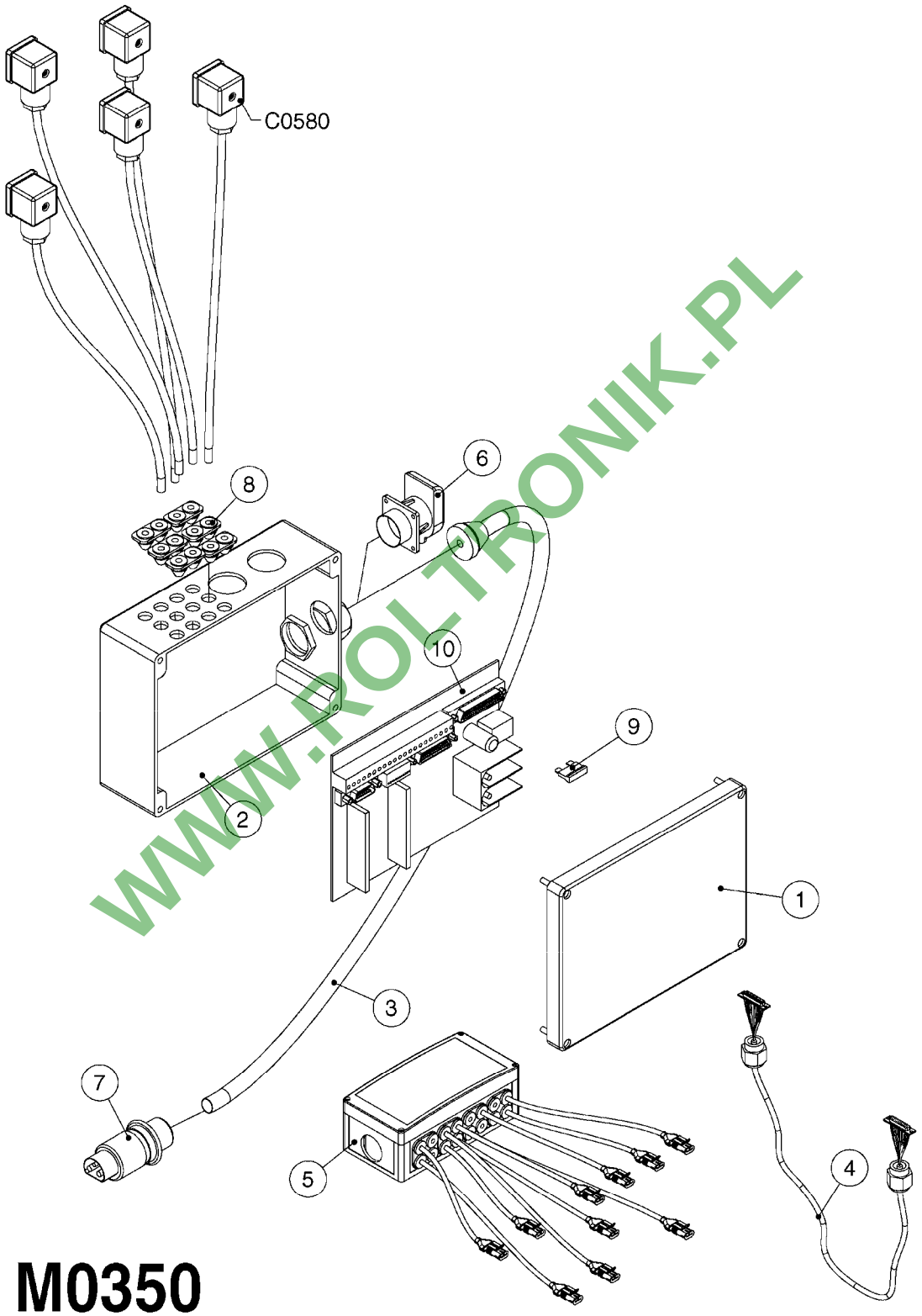

WWW.ROLTRONIK.PL

M0350

JUNCTION BOXES - HYDRAULIC
M0350-HIN, 01:01:16

Pos.	parts-n°	order qty	description
1	261442	1	LID F.3010/3012 HP BOX
2	391071	1	BOX FOR HY.DAH
3	983070	1	CABLE 2X6MM
4	26016900	1	CABLE DB25M - DB25F L=8.5m
5	26018000	1	HYD JUNCTION BOX SPZ PRE 2012 EAGLE SPC BOOMS
5	26018100	1	HYD. BOX BOOM PCB W/LEADS FOR FORCE/TWIN FORCE BOOMS
5	26018500	1	HYD. BOX BOOM PCB NO LEADS
5	26038300	1	HYD JUNCTION BOX GENERIC 2012 EAGLE SPC/FORCE BOOMS
6	28048000	1	PLUG 3-POL DIN 9680 FEM.CHASS
7	28048100	1	PLUG 3-POL DIN 9680 MALE SPRAY
8	28048200	1	WIRE GROMET RUBBER 4 HOLE
9	28048500	1	FUSE 10A AUTO
10	72243500	1	DAH INTERFACE PCB MOUNTED

WWW.ROLTRONIK.PL

	Agroparts: www.HARDI-INTERNATIONAL.com	
HARDI	NORAC SEVERE TERRAIN KIT M0360-HIN, 01:01:16	Page 0 Date 16.03.2016 13:56

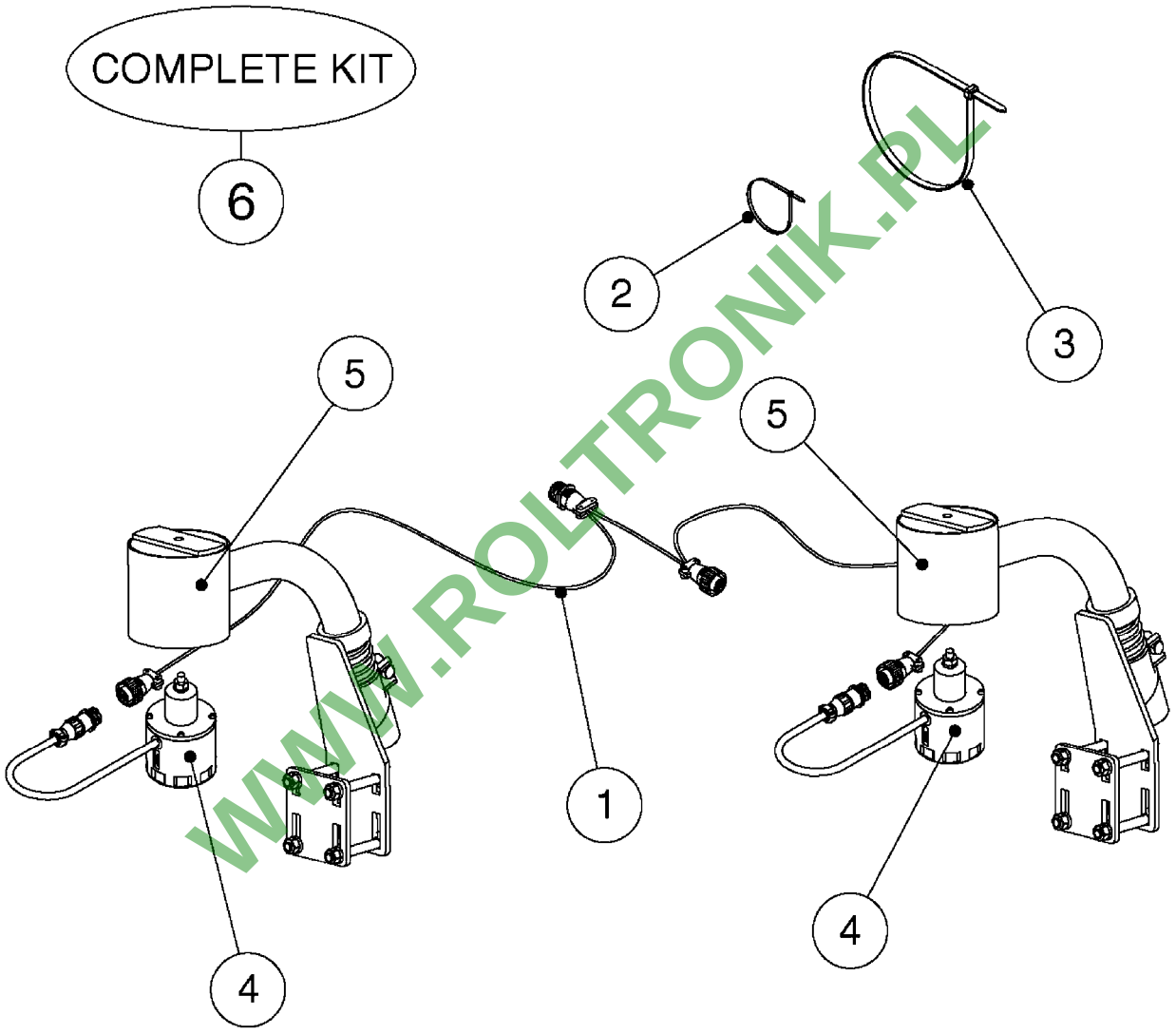

WWW.ROLTRONIK.PL

M0360

NORAC SEVERE TERRAIN KIT
M0360-HIN, 01:01:16

Date 16.03.2016 13:56

Pos.	parts-n°	order qty	description
1	26030300	1	NORAC SEVERE TERRAIN CABLE
2	28024103	1	TIE STRAP L=8" x W=3/16"
3	28025203	1	TIE STRAP L=23" x W=1/2"
4	28086400	1	UC4 ULTRASOUND SENSOR NORAC
5	28086500	1	UC4 SENSOR MOUNTING BKT. NORAC
6	72591600	1	NORAC HC SEVERE TERRAIN KIT

WWW.ROLTRONIK.PL

HARDI	**Agroparts: www.HARDI-INTERNATIONAL.com**	
	NORAC UC5 BOOM HEIGHT CONTROL M0370-HIN, 01:01:16	Page 0 Date 16.03.2016 13:56

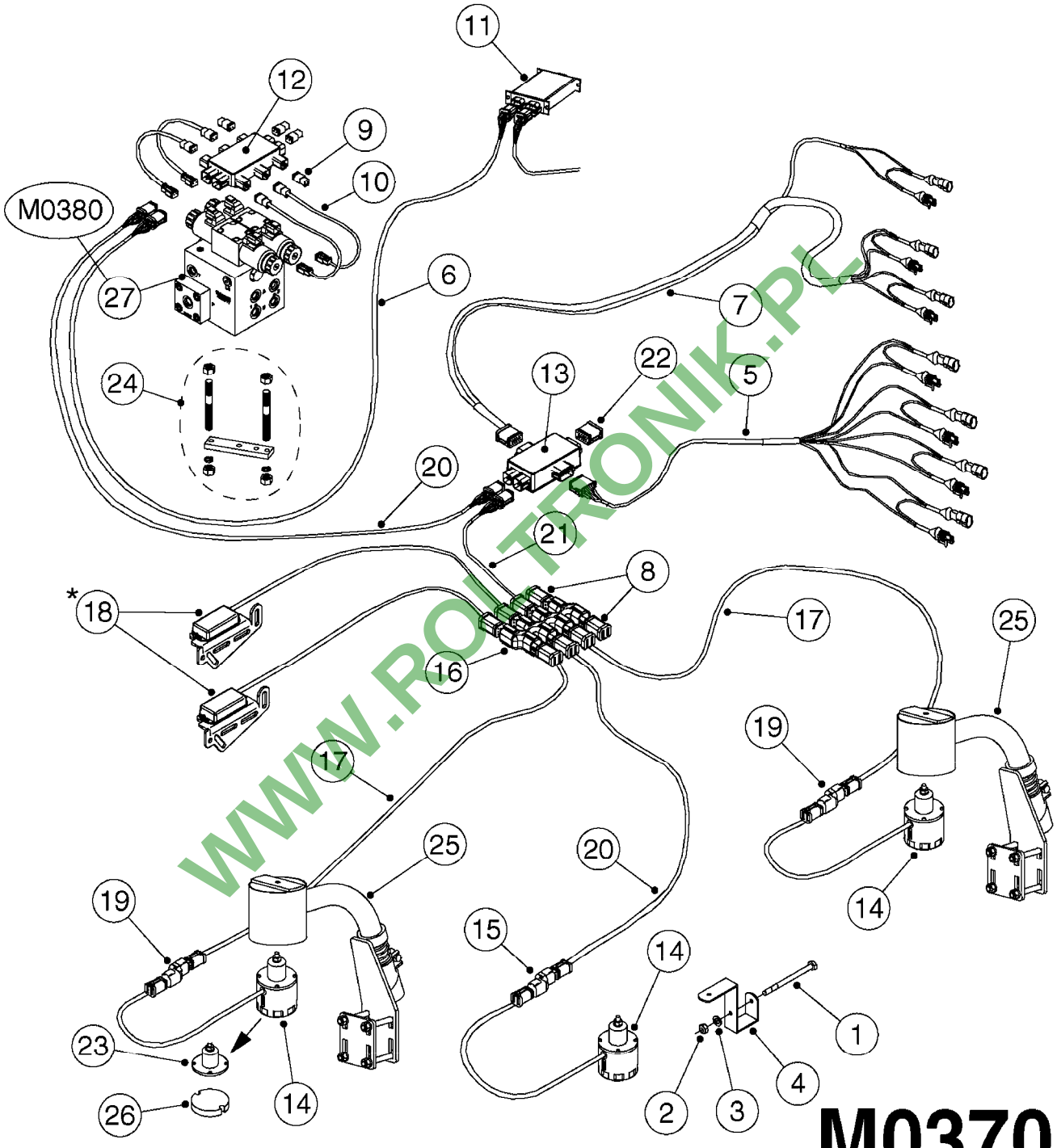

WWW.ROLTRONIK.PL

M0370

*CANNOT MIX OLD AND NEW STYLE ROLL SENSORS!

If replacing Norac P/N 43740, must replace both roll sensors with new style (18).
If unsure, new style (Norac P/N 43741) works with all versions of UC5.

NORAC UC5 BOOM HEIGHT CONTROL
M0370-HIN, 01:01:16

Pos.	parts-n°	order qty	description
1	410443	1	BOLT HEX 8.8 DEL M6X70 FORCE BOOM (FTZ)
1	410605	1	BOLT HEX 8.8 DEL M6X80 SPB/SPC BOOM
2	460261	1	NUT HEX M6X1 LOCK A2 DIN985
3	471124	1	WASHER, M6, Ø18/ 6.4X 1.6, SS
4	16128603	1	BRACKET F. SENSOR 60X60 TUBE SPB/SPC BOOM
4	16128703	1	BRACKET F. SENSOR 50x50 TUBE FORCE BOOM (FTZ)
5	26022703	1	CABLE,INTERFACE,TILT,NORAC UC5
6	26022903	1	CABLE UC5 NETWORK 14 AWG 10M
7	26023503	1	CABLE UC5 INTERFACE MAIN AMP
8	26024403	1	NORAC UC5 NETWORK 6-PIN PLUG
9	26043000	1	NORAC UC5 NETWORK 2 PIN PLUG
10	26043300	1	CABLE UC5 VALVE 2PIN/2PIN DT
11	26043400	1	NORAC UC5 CONTROLLER MODULE
12	26043500	1	NORAC UC5 VALVE MODULE
13	26043600	1	MODULE, INPUT, NORAC UC5
14	26043700	1	SENSOR, NORAC, UC5, ULTRASONIC
15	26043800	1	NORAC UC5 NETWORK COUPLER 2-WAY
16	26043900	1	NORAC UC5 NETWORK COUPLER 8-WAY
17	26044200	1	CABLE UC5 NETWORK 18 AWG 20M
18	26044300	1	NORAC UC5 ROLL SENSOR NEW STYLE NORAC P/N 43741
19	26044400	1	NORAC UC5 COUPLER 2-WAY/TERM.
20	26047100	1	CABLE UC5 NETWORK 14 AWG 1M
21	26049900	1	CABLE UC5 NETWORK 14 AWG 3M
22	26058000	1	NORAC UC5 NETWORK 12-PIN PLUG
23	28050303	1	NORAC RUBBER TOP&BOLT F.SENSOR
24	28055503	1	NORAC VALVE MOUNTING HARDWARE
25	28086500	1	UC4 SENSOR MOUNTING BKT. NORAC
26	28086600	1	FOAM DISC F. SENSOR NORAC
27	78216100	1	NORAC VALVE BLOCK COMP, DEUTSCH CON.

WWW.PDTRONIK.PL

HARDI	**Agroparts: www.HARDI-INTERNATIONAL.com**	
	NORAC VAR. RATE VALVE UC4/UC5 M0380-HIN, 01:01:16	Page 0 Date 16.03.2016 13:56

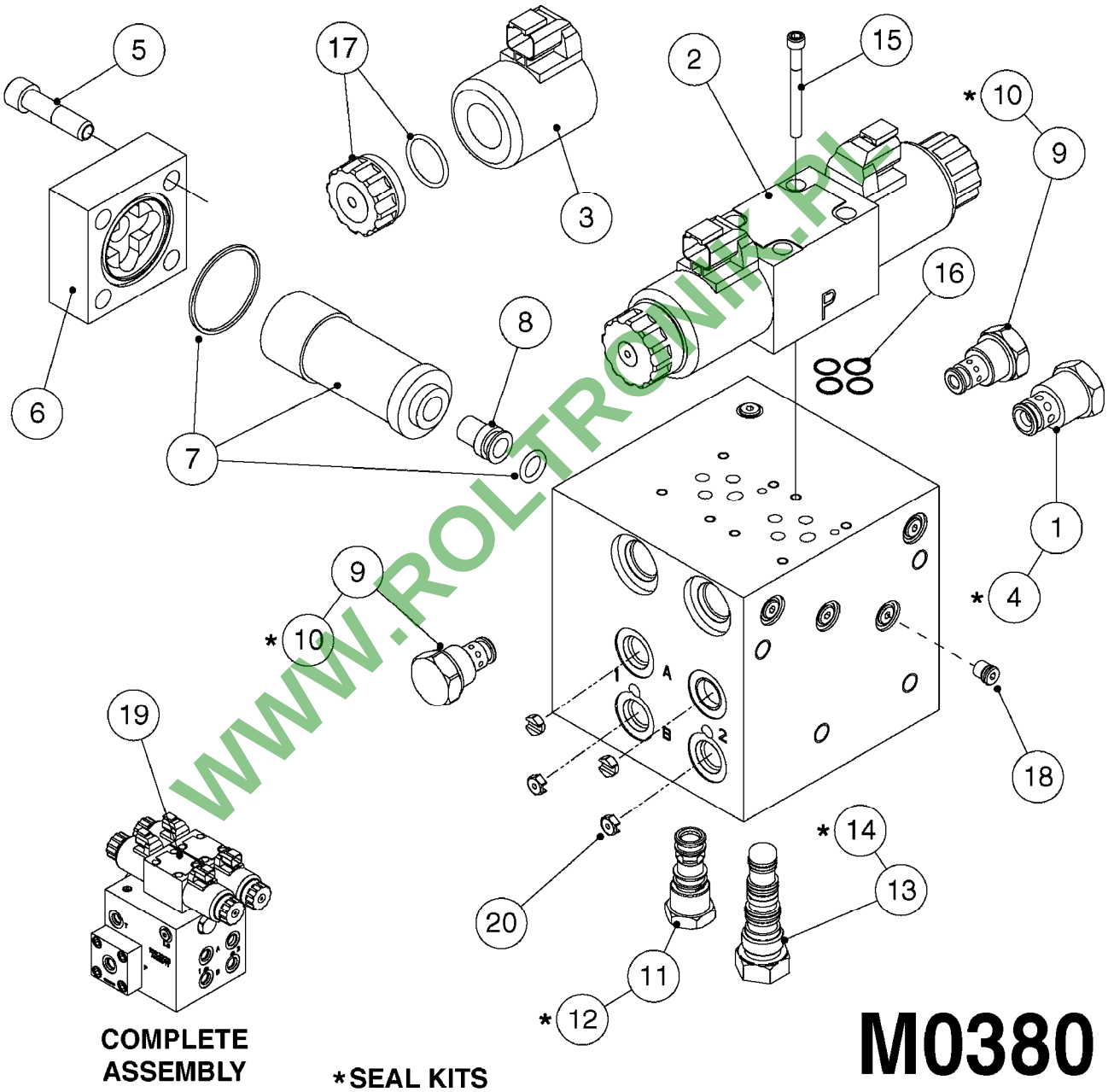

WWW.ROLTRONIK.PL

Pos.	parts-n°	order qty	description
1	28049403	1	NORAC CHECK VALVE
2	28055803	1	NORAC SOLENOID - DEUTSCH CONN.
3	28056503	1	COIL, NORAC, PROP, DEUTSCH
4	28066903	1	NORAC SEAL KIT F.28049403
5	28067103	1	NORAC HEX CAPSCREW 3/8X1-1/4"
6	28067203	1	NORAC FILTER CAP - 4 BOLT
7	28067303	1	NORAC FILTER ELEMENT KIT UC5
8	28067403	1	NORAC VALVE FILTER INSERT
9	28067503	1	NORAC CHECK VALVE C-8-2
10	28067603	1	NORAC SEAL KIT F.28067503
11	28067703	1	NORAC CHECK VALVE C-8-3
12	28067803	1	NORAC SEAL KIT F.28067703
13	28067903	1	NORAC CHECK VALVE C-8-4
14	28068003	1	NORAC SEAL KIT F.28067903
15	28068103	1	NORAC HEX CAPSCREW 10-24X2 SS
16	28068203	1	NORAC O-RING F.SOLENOID VALVE
17	28074903	1	NORAC COIL NUT AND O-RING
18	28089903	1	NORAC PLUG#2 SAE ZERO-LEAK
19	78216100	1	NORAC VALVE BLOCK COMP, DEUTSCH CON.
20	78603300	1	NORAC ONE WAY ORIFICE, .047"

WWW.ROLTRONIK.PL

HARDI	**Agroparts: www.HARDI-INTERNATIONAL.com**	
	HYD. JUNCTION BOX 2012 M0400-HIN, 01:01:16	Page 0 Date 16.03.2016 13:56

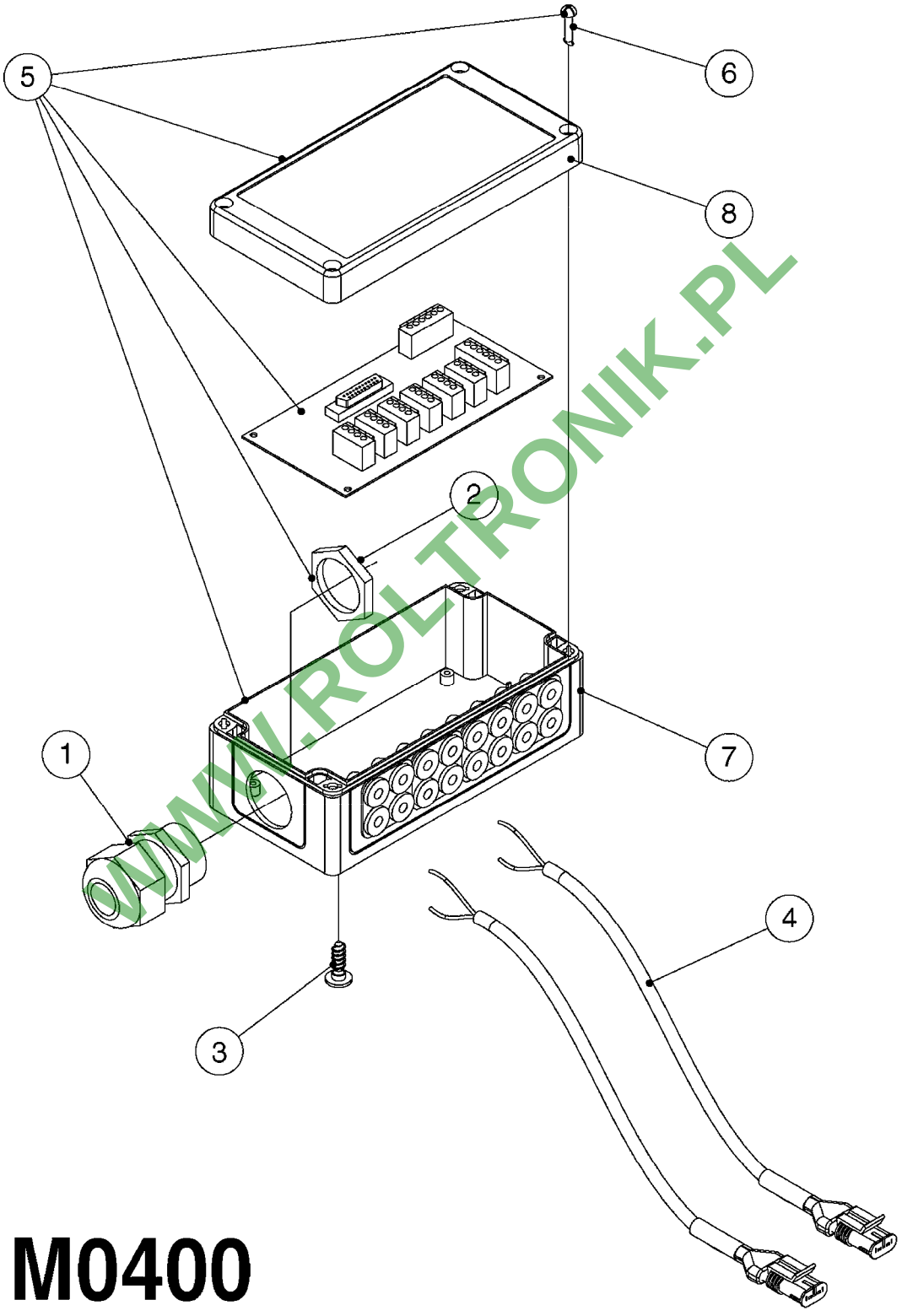

WWW.ROLTRONIK.PL

M0400

HYD. JUNCTION BOX 2012
M0400-HIN, 01:01:16

Pos.	parts-n°	order qty	description
1	262106	1	BULKHEAD F. CABLE 6.5-14 BLACK
2	262107	1	NUT F. BULKHEAD CABLE BLACK
3	440675	1	SCREW F. PLASTIC 5X16 SS
4	26006400	1	CABLE L = 0.75M, AMP, MALE, 2P
5	26018500	1	HYD. BOX BOOM PCB NO LEADS
6	28082100	1	SCREW F. BOX LID 1/4" L=20
7	33508700	1	BOX BOTTOM 160X80X40 BLACK 1-HOLE
8	33508800	1	LID 160X80X15 BLK W/SCREWS

WWW.ROLTRONIK.PL